

Infant / Pediatric Extension with 2" Pad

BF324

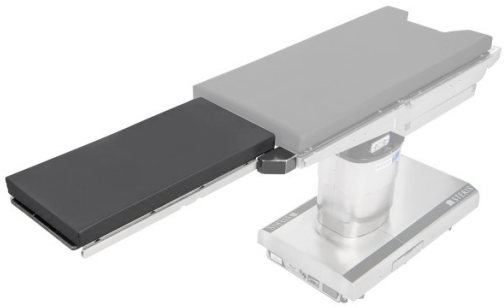

12-inch wide x 30-inch long (305-mm x 762-mm) platform mounts securely to end of back/seat section to improve surgical access to infant patients. Siderails facilitate armboard attachment. Two-inch (51 mm) pad included with hook and loop fasteners.

Patient Weight Capacity : 22,7 kg 50 lbs

Not CE marked product

COMPATIBLE WITH

4095 - 5095

