STERIS
Les indispensables



Single drawer

UA1954713

CE

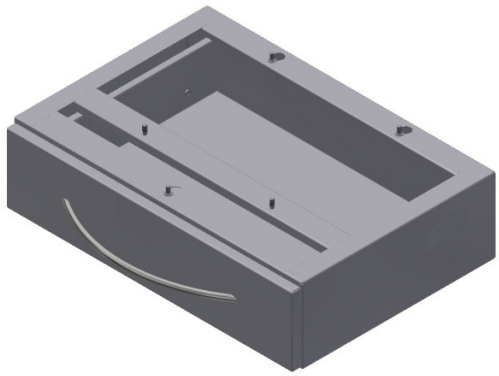

Dimensions: (W) 518 x (H) 130 x (L) 396mm

Fully extendable rails with attenuation and soft self closing; RAL 9006; EN 10152 1.2mm DC01 ZE-electrolytically galvanized sheet metal

Weight: 7,9 kg

Maximum load capacity: 10 kg

Mounting type: Under the shelf of the Service Head-horizontal

COMPATIBLE WITH

CEILING UNIT M20 W/MEDILIFT-H - CEILING UNIT M20 W/MEDIBOOM-H - CEILING UNIT M20 W/VALIA X-H

STERIS
Les indispensables



