CMAX™ X-RAY IMAGE-GUIDED SURGICAL TABLE

STERIS®

APPLICATION

The CMAX™ X-Ray Image-Guided Surgical Table is a mobile, electrohydraulic operating room table optimized to support vascular & endovascular surgery. Many other surgical procedures can also be performed with the addition of STERIS table accessories including thoracic, neurosurgery, spine, orthopedic, pain management, and ENT. CMAX™ X-Ray has a radiolucent "free-floating" carbon fiber tabletop that enables image guidance and surgical navigation techniques in collaboration with C-arm x-ray/fluoroscopic technologies.

CMAX™ X-Ray surgical table has a mobile integrating motorized wheel to move the surgical table. This wheel is should not be used with a patient on the surgical table.

DESCRIPTION

The CMAX™ X-Ray Surgical Table is a mobile, electrohydraulically operated surgical table specifically designed to provide complete patient C-arm access required for modern surgical care facilities. CMAX™ X-Ray features powered floor locks, lateral tilt, trendelenburg/reverse trendelenburg, floating tabletop, adjustable height, mobile drive and tabletop rotation capability. This table is designed to safely function with up to a 507 lb (230 kg) patient and is constructed of aluminum alloy, stainless steel, carbon fiber and other high- quality materials. CMAX™ X-Ray is equipped with a large floating carbon fiber tabletop providing unrestricted radiological access without patient reversing.

CMAX™ X-Ray operates on internal batteries or facility electric power through use of an internal power supply/ battery charger.

The table executes positioning commands through the following sources:

1. Main hand control/pendant (wired)
2. Joystick palm control (wired or Bluetooth)
3. Backup control panel (on table column)

Product Dimensions* (W x L x H):

22.1" x 78.7" x 26.7 to 41"

(560 mm x 2000 mm x 680 to 1040 mm)

* excludes tabletop extensions

Table Weight:

728 lbs (330 kg)

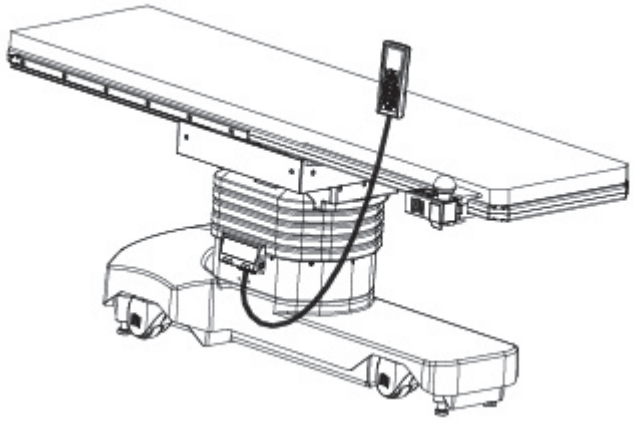

The standard table configuration includes :

- Floating carbon tabletop
- Hydraulically powered adjustable height, Trendelenburg, and lateral articulations
- Main hand control, joystick control, and backup control
- ABS plastic mobile base with hydraulically operated floor locks
- Electrically powered mobile drive and rotation capability
- 507 lb (230 kg) patient weight capacity
- Power cord
- Main hand control spiral cable
- Joystick control spiral cable

STANDARDS

The CMAX™ X-Ray surgical table complies with the following standards:

- IEC 60601-1 (EN60601-1) general safety regulations applicable to medical equipment.
- IEC 60601-2-46 (EN60601-2-46) safety regulations applicable to surgical tables.
- IEC 60601-1-2 (EN60601-1-2) relating to electromagnetic interferences.
- CE marked according directive EU 2017/745

- Class 1 medical device
- Type B Equipment
- Suitable for intermittent operation, three minutes per hour
- IPX-4 (Fluid Ingress Protection)

FEATURES

Floating tabletop: CMAX™ X-Ray offers exceptional radiological access because of the long transverse +/- 5”/125 mm (stroke 10”/250 mm)) and longitudinal slide 0–27.5”/0–700 mm (stroke 27.5”/700 mm). For attaching accessories, the tabletop includes a NA standard stainless steel side rail on both sides located where they will not obstruct the imaging area. Hook & loop fasteners attach the latex-free mattress pad. The radiolucent tabletop enables the viewing of the entire anatomy.

Column supports tabletop and includes lift cylinders, bearings, hydraulic piping, hydraulic actuators for Trendelenburg, electrical wiring and master computer. These components are enclosed by five shrouds. The polycarbonate shrouds are of two-piece construction for service accessibility. Main hand control and joystick control connect on the override control at top of column. The joystick control manages: height up/down, return to level and lock/unlock floating control.

Base structure is made of anti-corrosive coated welded metal sheet. The base covers are comprised of two pieces. Four large diameter swivel casters inside the base cover facilitate table relocation and movement. Four hydraulically operated floor-locks are supplied. The power supply assembly and floor lock actuators are also within the base. Table power cord is plugged into a receptacle centered on the base head end cover.

Electrical control system provides powered tabletop positioning. Hydraulic actuators perform all powered table motion. The primary control system is a master computer located in the table column. The computer selects which outputs are to be actuated based on inputs from an auxiliary CPU in the main hand control or joystick control. The main hand control is a tethered pendant that hangs from the standard NA side rail. The joystick control clamps on the standard NA side rail.

Hand control provides user inputs (from touch pad switches via an auxiliary CPU) to the master computer. It also includes battery and floor lock status LEDs. An auxiliary backup panel control located on the table column enables all table actuations in the event of main hand control or joystick control failure.

Mains power is fed by a detachable three wire grounded power cord into an isolation transformer. The power is reduced to 24 V, and is rectified to DC. The operating system is powered by 24 VDC.

Fuses are used for protection of the system. The main hand control (an auxiliary CPU) consists of switches that open or close to signal the computer in the table column. If the mains power fails, the battery system can be used to power the table.

The Battery System is activated automatically. Activation of the battery system permits the table to be articulated as necessary for approximately 15 procedures. The batteries are continuously charging as long as the table is supplied with the appropriate AC voltage.

Controls

Main hand control is ergonomically designed, is constructed of injection-molded grey silicon, is the primary interface for table operation, and the keypad is illuminated for easy identification when room is dark.

The large TFT colored screen displays each movement selected and the position of the patient and all information about table status (batteries, floor locking, etc.).

The easy-to-navigate menu provides direct access to all functions for intuitive use at every stage of the surgical procedure.

Main hand control and joystick control are equipped with a coiled 3" to 12" (0.9 m to 3.7 m) long extension cord plugged into a receptacle located under the override control panel.

Joystick control can communicate wired or wirelessly with the table via Bluetooth protocol.

Membrane touch switches provide, through an auxiliary CPU, input signals to activate table functions and articulations.

Components

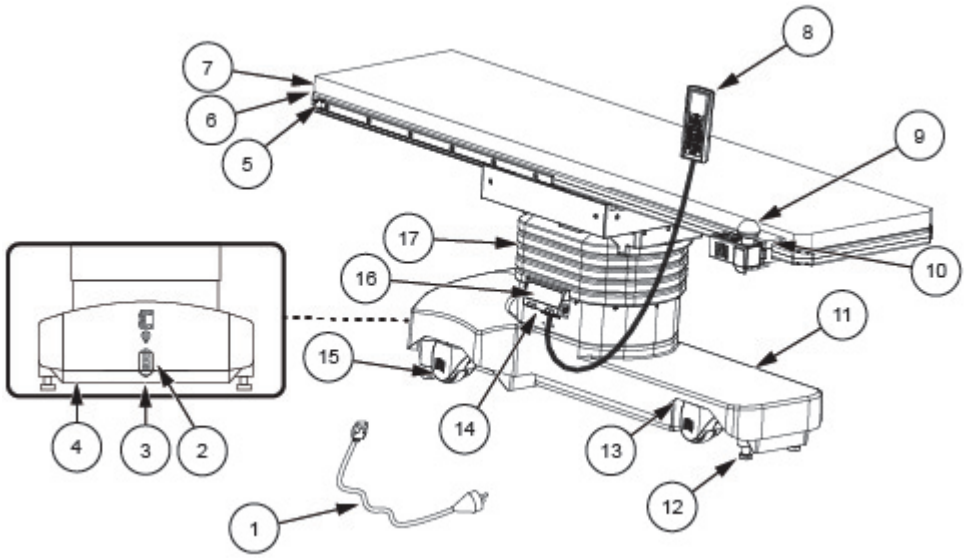

1	Power cord	10	Carbon fiber rail
2	Electrical characteristics label	11	Mobile base
3	Mains connection panel	12	Floor locks
4	Identification label	13	Battery fuses
5	Standard accessory rails	14	Override Control
6	Head section interface	15	Caster wheels
7	Floating tabletop	16	Connection panel
8	Main hand control	17	Column
9	Joystick control		

Tabletop Dimensions

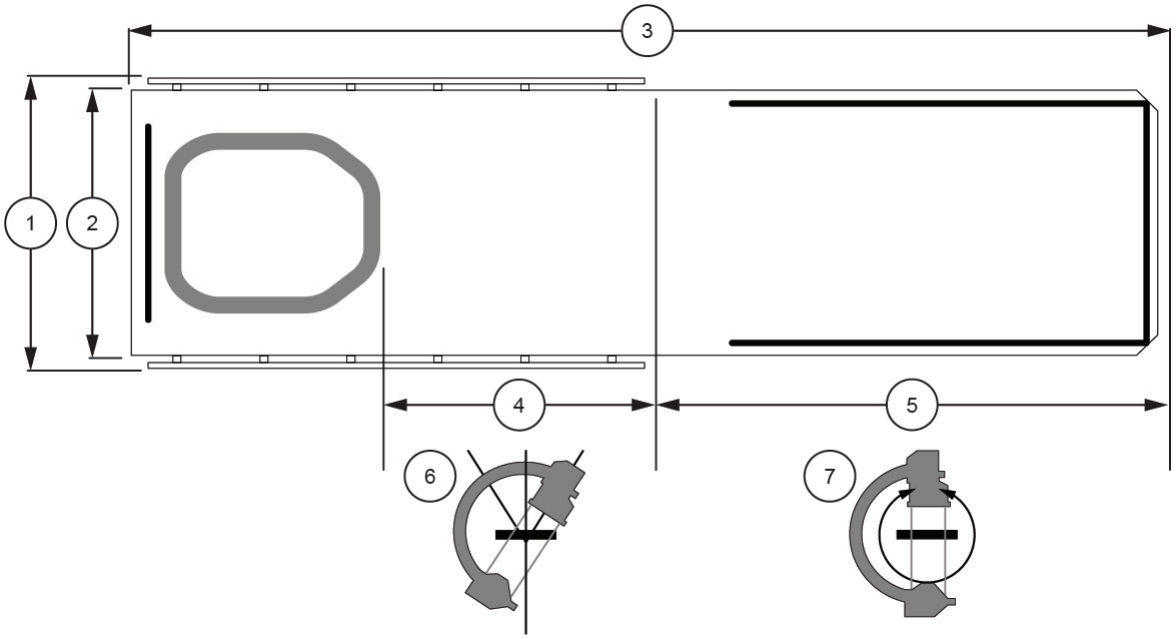

1	22.1” (560 mm)	5	39.4” (1000 mm)
2	20.5” (520 mm)	6	66° (2 x 33°)
3	78.7” (2000 mm)	7	360° radiotransparency range
4	19.3” (490 mm)		

Base Dimensions

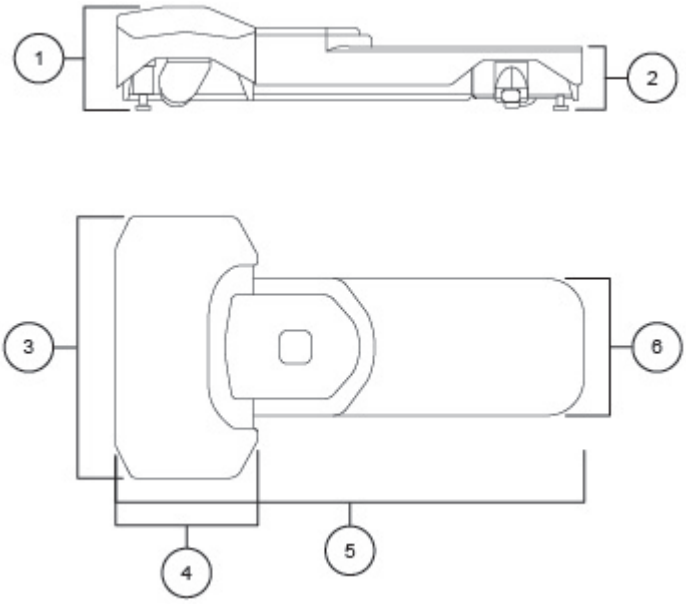

1	10.5” (267 mm)	4	14.5” (367 mm)
2	6.4” (162 mm)	5	33.1” (840 mm)
3	26.6” (675 mm)	6	13.8” (352 mm)

Articulation Specifications

Up and Down		
1	26.8″ 680 mm	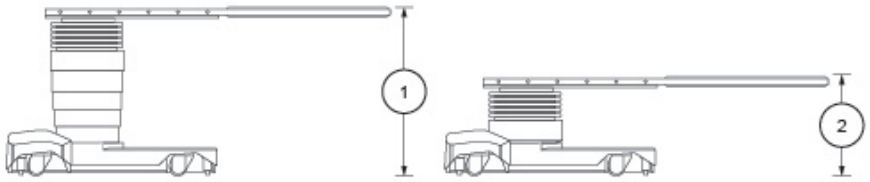
2	40.9″ 1040 mm	
Float		
Longitudinal		
1	0″ 0 mm	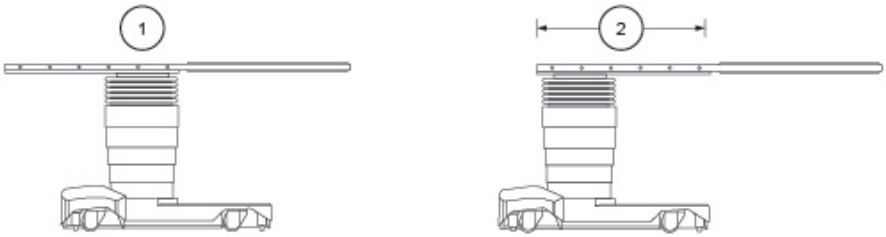
2	26.8″ 680 mm	
Transverse		
1	5.1″ 130 mm	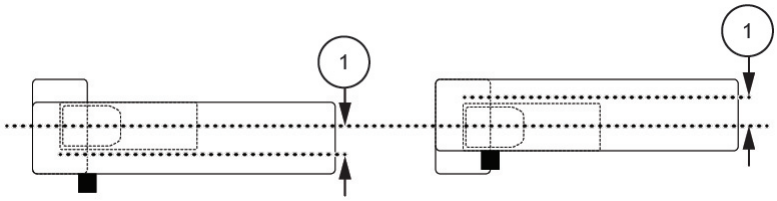
Tilt		
1	20°	
2	20°	
Trendelenburg/Reverse Trendelenburg		
1	30°	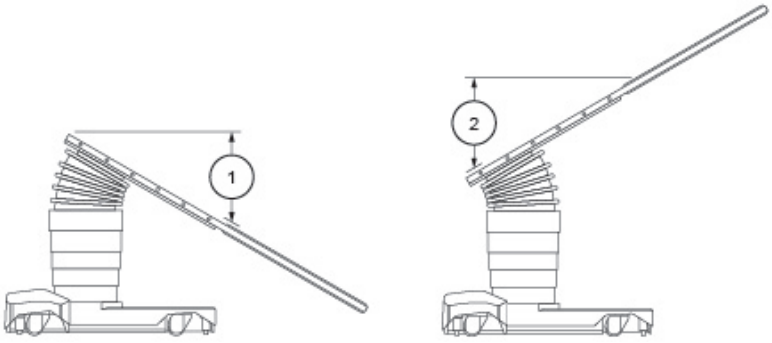
2	30°	

Main Hand Control

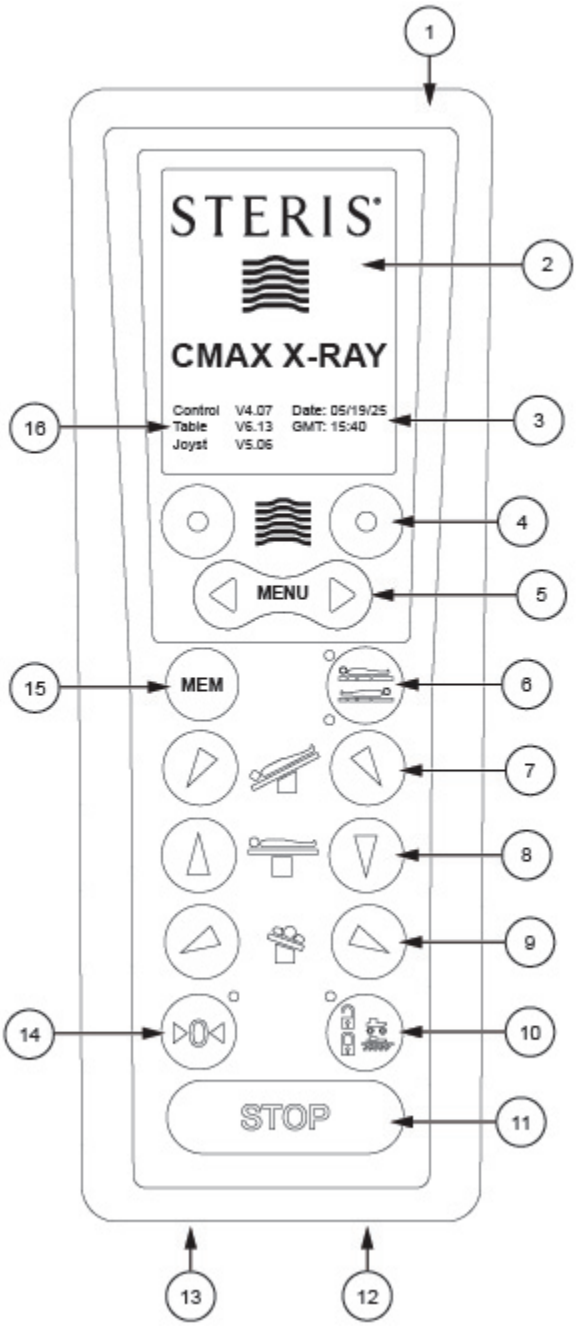

1	Touch and audible sensors	9	Tilt left/right control
2	Color screen	10	Lock/unlock control
3	Date and time	11	Stop control
4	Movement direction control	12	Spiral cable connection
5	Menu selection control	13	Motorized transfer control connection
6	Patient/tabletop orientation control	14	Level control
7	Trend/reverse trend control	15	Position memory control
8	Table up/down control	16	Software versions

Joystick Control

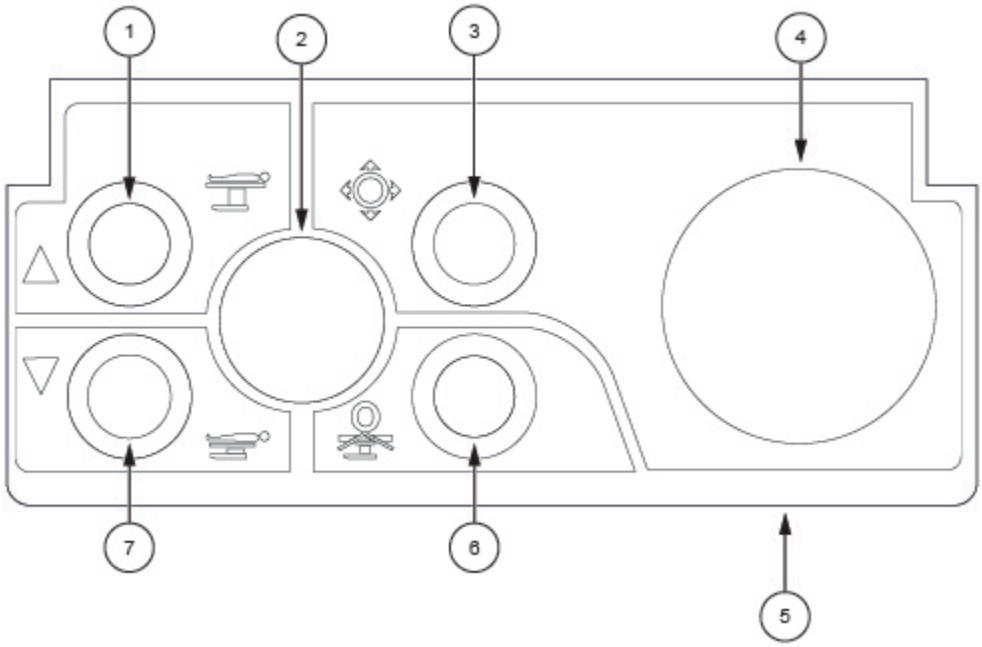

1	Table up control	5	Locking tab
2	Joystick indicator light	6	Return to level control
3	Float lock/unlock control	7	Table down control
4	Float control knob		

Override Control and Control Panel

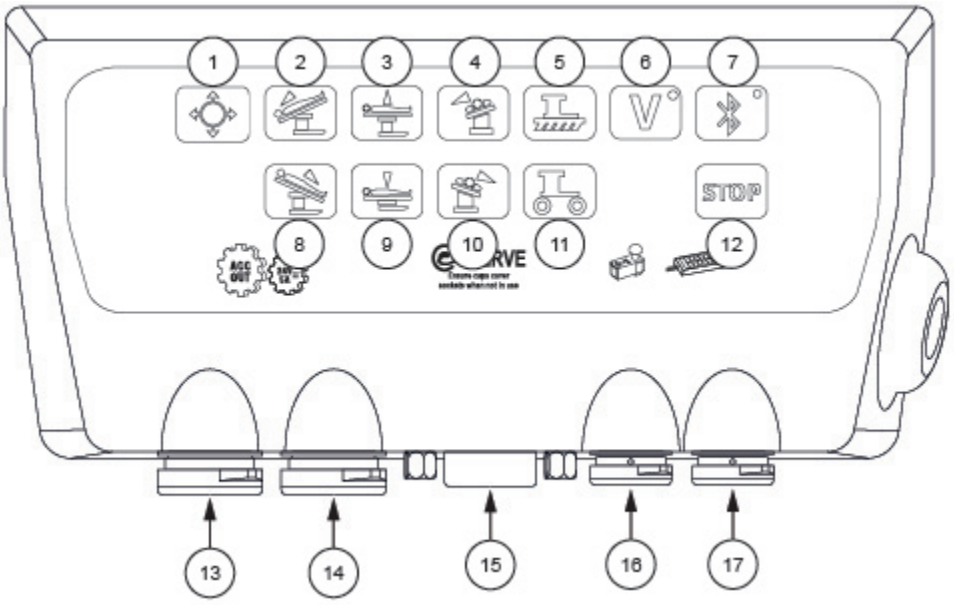

1	Lock/unlock float control	10	Tilt right control
2	Trend control	11	Unlock control
3	Table up control	12	Stop control
4	Tilt left control	13	Accessory ports (not used)
5	Lock control	14	
6	Emergency mode control	15	E-Serve connector (only for STERIS tech use)
7	Bluetooth control	16	Joystick connector port
8	Reverse trend control	17	Main hand control connector port
9	Table down control		

PREVENTIVE MAINTENANCE

Customers are encouraged to contact STERIS concerning our comprehensive preventive maintenance agreement. Under the terms of this agreement, preventive maintenance, adjustments, and replacement of worn parts are provided on scheduled basis to help to ensure optimal equipment performance and help avoid untimely or costly interruptions. STERIS maintains a global staff of well equipped, factory-trained technicians to provide these services, as well as expert repair services. Please contact STERIS for details.

NOTES

1. Approximate Operating Weight: 728 lb (330kg)
2. Patient weight capacity: 507 lb (230kg)
3. A patient grounding post/potential equalization terminal (male connector, DIN 42801) is provided with the table. The female connector for patient grounding is not furnished by STERIS.
4. **WARNING: EXPLOSION HAZARD** - *table must not be used in the presence of flammable anaesthetics.*

UTILITY REQUIREMENTS

Line Power Input:

100 VAC 60 Hz

420 VA max 1 Phase

Environnemental Conditions:

Temperature : 50-104 °F (10-40 °C)

Relative Humidity : 10-85% RH (non-condensing)

Selections Checked Below Apply To This Equipment

VOLTAGE

☐ 120 VAC, Single Phase, 60 Hz

POWER SOURCE

☐ Battery/Electric-powered table

PAD CONFIGURATION

☐ 2" TLT Mattress Pad (Latex-free; Welded Seam)

☐ 3" TLT Mattress Pad (Latex-Free; Welded Seam)

ACCESSORIES

☐ Siderail Adapter

☐ Rotary Clamp

☐ Catheter Extension

☐ AV Fistula Board

Item:	
Locations:	

For Further Information, contact:

STERIS Corporation
5960 Heisley Rd.
Mentor, OH 44060–1834 ▪ USA
440–354–2600 ▪ 800–548–4873
www.steris.com

The base language of this document is ENGLISH. Any translations must be made from the base language document.

CUSTOMER IS RESPONSIBLE FOR COMPLIANCE WITH APPLICABLE LOCAL AND NATIONAL CODES AND REGULATIONS.

©2025, STERIS Corporation.
All rights reserved.

This document is intended for the exclusive use of STERIS Customers, including architects or designers. Reproduction in whole or in part by any party other than a Customer is prohibited.