STERIS®

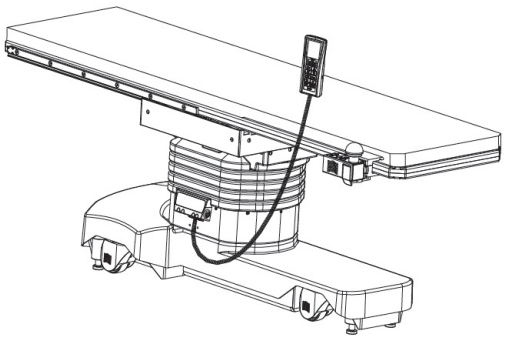

CMAX™ X-Ray

Image-Guided Surgical Table

Operator Manual

International

en
11066888
Revision B

© 2025 STERIS. All rights reserved.

Published: 2025-7-30

TABLE OF CONTENTS

Section Number	Description	Page
1	**Copyright Information**	**1**
2	**A Word from STERIS**	**2**
2.1	Introduction	2
2.2	Intended Use	2
2.3	Indications for Use	2
2.4	Contraindications	2
2.5	Patient Target Group	2
2.6	Intended User	2
2.7	Essential Performance	2
2.8	Intended Lifetime	3
2.9	Waste Disposal	3
2.10	Service Information	3
2.11	Addresses	4
3	**Safety Precautions**	**5**
4	**Symbols Used**	**16**
4.1	Product Labels	16
4.2	Main Hand Control Symbols	19
4.3	TFT Screen Symbols	20
4.4	Joystick Symbols	21
4.5	Override Control and Connection Panel Symbols	22
5	**Specifications and Requirements**	**24**
5.1	Product Specifications	24
5.2	Electrical Characteristics	25
5.3	Radiocommunication Characteristics	26
5.4	Mechanical Characteristics	26
5.5	Main Materials Used	26
5.6	Tabletop Dimensions	27
5.7	Articulation Specifications	28
5.8	Environmental Requirements	29
6	**Component Identification**	**30**
6.1	Exterior Components	30
6.2	Mains Connection Panel	32
6.3	Main Hand Control	33
6.4	Joystick Control	36
6.5	Override Control and Control Panel	37
7	**Surgical Table Setup**	**39**
7.1	Install and Remove Battery Fuse	39
7.2	Plug the Surgical Table into Mains Power	40
7.3	Connect and Disconnect the Main Hand Control	40
7.4	Connect and Disconnect the Joystick	41
7.5	Install and Remove Motorized Transfer Handle	44
7.6	Examples of Mounting Accessories to Tabletop	48
8	**Operation**	**50**
8.1	General Information	50

8.2 Main Hand Control Operation 51
8.3 Joystick Control Operation 55
8.4 Override Control Operation 58
8.5 Motorized Transfer Handle Operation 60
8.6 Patient Positioning and Radiotransparent Zones 62
8.7 Surgery Examples 64
8.8 Operating the Surgical Table on Batteries 66
8.9 Operating the Surgical Table on Mains Power 67
9 Routine Maintenance 68
9.1 Maintenance Schedule 68
9.2 Cleaning and Disinfection 68
9.3 Battery Charging 70
10 Troubleshooting 73
10.1 1 - Hand Control Error - ONE_KEY_ONLY 73
10.2 2 - Hand Control Error - DUAL_COMMAND 73
10.3 3 - Hand Control Error - INT_TCDE 73
10.4 4 - Hand Control Error - INT_PEDALE 74
10.5 5 - Hand Control Error - INT_ESERVE 74
10.6 6 - Hand Control Error - INT_BT 74
10.7 7 - Hand Control Error - SLIDE_BLOCKED 74
10.8 8 - Hand Control Error - REV_ORIENT 75
10.9 9 - Hand Control Error - PLUG_MAINS 75
10.10 10 - Hand Control Error - LOCK_AGAIN 75
10.11 11 - Hand Control Error - WRONG_USE 75
10.12 12 - Hand Control Error - TILT_SENS_DEF 76
10.13 14 - Hand Control Error - BACK_SENS_DEF 76
10.14 13 - Hand Control Error - TREND_SENS_DEF 76
10.15 15 - Hand Control Error - LEGL_SENS_DEF 76
10.16 16 - Hand Control Error - LEGR_SENS_DEF 76
10.17 17 - Hand Control Error - HEIGH_SENS_DEF 77
10.18 18 - Hand Control Error - SLIDE_SENS_DEF 77
10.19 20 - Hand Control Error - PARAM_FAIL 77
10.20 21 - Hand Control Error - BATT_FUSE 77
10.21 22 - Hand Control Error - BATT_DEF 77
10.22 23 - Hand Control Error - CHARGER_DEF 78
10.23 24 - Hand Control Error - BATT_MODE 78
10.24 25 - Hand Control Error - PUMP_DEF 78
10.25 26 - Hand Control Error - VALVE_DEF 78
10.26 27 - Hand Control Error - MOTOR_DEF 78
10.27 28 - Hand Control Error - MOTOR_FAIL 79
10.28 31 - Hand Control Error - BAD_VERSION 79
10.29 32 - Hand Control Error - PUMP_FAIL 79
10.30 33 - Hand Control Error - VOLTAGE_PEAK 79
10.31 34 - Hand Control Error - VALVE_FAIL 79
10.32 35 - Hand Control Error - ALS_DEF 80
10.33 36 - Hand Control Error - START_UP 80
10.34 37 - Hand Control Error - AUTOOFF 80
10.35 38 - Hand Control Error - CURRENT_WHEEL_DEF 80
10.36 39 - Hand Control Error - FLAG_WHEEL_DEF 81

10.37 40 - Hand Control Error - BAT_VERT2ORANGE 81
10.38 41 - Hand Control Error - BAT_ORANGE2ROUGE 81
10.39 42 - Hand Control Error - RTC_DEF 81
10.40 43 - Hand Control Error - ACC_MOTOR_DEF 82
10.41 44 - Hand Control Error - ACC_MOTOR_FAIL 82
10.42 45 - Hand Control Error - OFF_EXT 82
10.43 46 - Hand Control Error - AUTOOFF_CHARGE_END 82
10.44 49 - Hand Control Error - PVALVE_DEF 83
10.45 50 - Hand Control Error - LOW_BATT_USE 83
10.46 51 - Hand Control Error - FREIN_FLOATING_FAIL 83
10.47 52- Hand Control Error - SLIDE_LONG_SENS_DEF 83
10.48 53 - Hand Control Error – SLIDE_LAT_SENS_DEF 84
10.49 54 - Hand Control Error – INT_JOYSTICK 84
10.50 55 - Hand Control Error – DURRE_FLOATING_DEF 84
10.51 Surgical Table will not Turn ON 85
10.52 No Surgical Table Movement 85
10.53 Surgical Table will not Go on Caster Wheels 86
10.54 Surgical Table Remains in Battery Mode when Plugged into Mains Power 86
10.55 Extensions will not Lock or have Excessive Play 86
10.56 Float Function not Working 86
10.57 Hand Control not Displaying Full Charge 87
10.58 Position on Hand Control Does not Match Surgical Table Position 87
10.59 Tabletop Red on Hand Control when Tilt is Selected 87
10.60 Joystick not Connecting via Bluetooth 88
10.61 Recurring Premature Battery Failure 88
11 Appendix 89
11.1 Spare Parts 89
11.2 Accessories 89
12 EMC Compliance Technical Data 90

Copyright Information

CMAX™ is a trademark of STERIS. All other company or product names referenced in this document are trademarks of their respective owners.

© 2025 STERIS Corporation All rights reserved.

This publication is protected by copyright. Copying, disclosure to others, or the use of this publication is prohibited without the express written consent of STERIS.

STERIS reserves the right to make changes in the specifications shown herein without notice or obligation. For additional information, contact STERIS.

A Word from STERIS

2.1 Introduction

Thank you for choosing this STERIS product. STERIS is committed to ensuring your continued satisfaction. This manual contains important information on proper use and maintenance of the STERIS CMAX™ X-Ray table.

IMPORTANT: *A listing of the Safety Precautions to be observed when operating and servicing this equipment can be found in Section 3, Safety Precautions. Do not operate or service the equipment until you have been trained on this information.*

These instructions provide crucial information on how to prevent injuries and property damage that could result from improper maintenance of the CMAX™ X-Ray table. This manual should be retained in a conveniently accessible area for quick reference.

Any alteration of the surgical table not authorized or performed by STERIS which could affect operation will void the warranty, could jeopardize operator and patient safety, could adversely affect efficacy, and could violate national, federal, state or local regulations.

2.2 Intended Use

CMAX™ X-Ray surgical tables are medical devices intended to support and position patients during surgical procedures carried out in an operating room.

2.3 Indications for Use

This surgical table is designed to support patients in surgical procedures that require maximum radiological access for surgical procedures from the following (but not limited to) specialties: vascular, cardiac, urology and neurology/spine. This surgical table is also designed to safely move patients within the surgical suite (from pre-operative area to operating room and from operating room to post-operative recovery).

The surgical table is to be operated by fully trained personnel who have successfully completed the operator training course.

2.4 Contraindications

There are no contraindications, undesirable side-effect or residual risks associated with CMAX™ X-Ray surgical tables. All safety instructions related to the use of these medical devices are listed in *Section 3, Safety Precautions*.

2.5 Patient Target Group

CMAX™ X-Ray surgical tables are not directed to a particular patient population: these medical devices are supposed to suit any type of patient, regardless of age, anatomy, gender, etc. However, for the safety of the product, weight limits of patients are indicated in this manual.

2.6 Intended User

CMAX™ X-Ray surgical tables must be used only by qualified personnel who are authorized to practice in the healthcare facility. These medical devices shall be operated in a controlled environment by fully trained personnel. This product was developed for surgeons, anesthetists, nurses etc. and is for use in operating rooms, pre-anesthesia rooms, or recovery rooms.

2.7 Essential Performance

CMAX™ X-Ray surgical tables shall support a patient without unwanted movement in a single-fault condition.

2.8 Intended Lifetime

The intended lifetime of CMAX™ X-Ray surgical tables is set at 10 years, provided that the conditions of use, the cleaning and maintenance instructions listed in this manual are correctly followed.

2.9 Waste Disposal

WARNING

DISPOSAL HAZARD

⚠ This product contains materials which may require disposal through appropriately licensed and permitted hazardous waste management firms.

CAUTION

POSSIBLE EQUIPMENT DAMAGE

⚠ Use of incorrect hydraulic oil may severely damage the table and/or cause malfunction. Contact STERIS for proper hydraulic oil.

The following materials may be contained within the table. When disposing of the table or its parts, ensure the proper disposal of hazardous and other regulated waste in compliance with national, federal, state or local regulations.

Lead Acid (Pb/H_2SO_4): gelled cell batteries located in the table base at the head-end side of the table. Approximate weight 21 lbs. (9.5 kg).

Lead (Pb) in Solder: contained in solder on circuit boards and in some miscellaneous wire connections. Minute amounts.

Electronic and Electrical Parts: not known to require special disposal at date of this manual.

Parts Material: made from aluminum (Al), steel (Fe), cast iron (Fe), copper (Cu), and copper alloys (Cu/x), plastic, synthetic rubber, plating (Cr, Ni, Zn, Au), Polyvinylchloride (PVC), and adhesives not known to require special disposal methods at date of this manual.

Hydraulic Oil: contained in hydraulic components located in the base, column, tabletop, and hydraulic system lines and hoses.

2.10 Service Information

Customers are encouraged to contact STERIS about our annual maintenance program. Under the terms of the program, preventive maintenance, adjustments, and the replacement of worn parts are provided on a scheduled basis to help ensure optimal performance and to help minimize untimely or costly interruptions. STERIS maintains a worldwide staff of well-equipped, factory-trained technicians to provide these services, as well as on-site installation, training, and expert repair services. Only STERIS personnel should perform non-routine maintenance.

2.11 Addresses

CH REP

STERIS GmbH
c/o BDO AG
Längfeldweg 116A
CH-2504 Biel-Bienne
Switzerland

EC REP

STERIS Ireland Limited
IDA Business and Technology Park
Tullamore
County Offaly
R35 X865 ▪ Ireland

UK REP

STERIS Solutions Limited
Chancery House Rayns Way
Watermead Business Park, Syston
Leicester LE7 1PF UK

STERIS Corporation
2720 Gunter Park East
Montgomery, AL 36109 ▪ USA
TEL: 334–277–6660
FAX: 334–271–5450

For Service Repair, contact STERIS.

For Technical Assistance, contact STERIS.

This document is intended for the exclusive use of STERIS Customers, including architects or designers. Reproduction in whole or in part by any party other than a Customer is prohibited.

CUSTOMER IS RESPONSIBLE FOR COMPLIANCE WITH APPLICABLE LOCAL AND NATIONAL CODES AND REGULATIONS.

The base language of this document is ENGLISH. Any translations must be made from the base language document.

Any serious incident that has occurred in relation to this device should be reported to the manufacturer and the competent authority of the Member State in which the user and/or patient is established.

For electronic file and additional languages, go to: *https://www.steris.com/healthcare/instructions-for-use*

Waste of electrical and electronic equipment must not be disposed as unsorted municipal waste. It must be collected separately and must be disposed as per local regulations. Contact your authorized representative for information concerning the decommissioning of the equipment.

Safety Precautions

The following *Safety Precautions* **must** be observed when operating or servicing this STERIS equipment. WARNING indicates the potential for personal injury and CAUTION indicates the potential for damage to equipment. For emphasis, certain Safety Precautions are repeated throughout the manual. **It is important to review ALL Safety Precautions before operating or servicing the unit.**

NOTE: Disregarding this safety information is considered **ABNORMAL USE** of this product.

NOTE: Any serious incident involving this medical device must be reported to STERIS and the competent authority of the member state in which the user and/or patient is established.

WARNING

PERSONAL INJURY

⚠ The modification of this medical device without manufacturer authorization is prohibited.

Turning the Table ON

WARNING

PERSONAL INJURY AND/OR EQUIPMENT DAMAGE

⚠ Every time the surgical table is turned ON, check that the pre-selected patient orientation corresponds to desired procedure. When the surgical table is turned OFF, the patient orientation pre-selection is memorized.

Turning the Table OFF

WARNING

PERSONAL INJURY AND/OR EQUIPMENT DAMAGE

⚠ The STOP buttons on the main hand control and on the override control allow all surgical table movements to STOP.

⚠ In wired mode, the surgical table stops automatically at the end of a pre-programmed cycle.

Pinch Points

WARNING

PERSONAL INJURY

⚠ When floating is enabled, moving the floating tabletop can cause pinch points which can injure the patient or the surgical team.

⚠ To avoid serious injury, keep limbs, fingers and other body areas clear of all pinch points when positioning the surgical table.

⚠ When manually positioning surgical table sections, stay clear of potential pinching hazards.

Precaution During Movement

WARNING

PERSONAL INJURY AND/OR EQUIPMENT DAMAGE

⚠ Before any movement activation, be sure that there is no risk of contact or collision with an object, on equipment or a person.

Floor Lock

WARNING

PERSONAL INJURY AND/OR EQUIPMENT DAMAGE

⚠ When floating is enabled, moving the floating tabletop can cause pinch points which can injure the patient or the surgical team.

⚠ Tabletop functions are available even if table floor locks are NOT engaged. Lock table before positioning the patient and starting the surgical procedure.

⚠ Do not try to move the table when it is locked.

⚠ Make sure the table is stable before engaging the floor locks. If the table is unstable move it to a flatter surface then engage the floor locks.

⚠ Patient must be secured to the surgical table in accordance with recommended positioning practices. Unanticipated patient or surgical table movement could result in death or serious injury.

Moving the Surgical Table with Patient

WARNING

PERSONAL INJURY AND/OR EQUIPMENT DAMAGE

⚠ The surgical table can only be unlocked if the floating tabletop is not activated.

When moving or adjusting the surgical table with a patient on it, the surgical table must be in the transport position, i.e., the following conditions must be applied:

- The tabletop must be level and centered on the column.
- Only lateral slide of the tabletop of up to 2" (50) mm is authorized.

⚠
- The tabletop must be lowered to a height of less than 35.4" (900 mm).
- The patient must be in normal orientation and the total weight (patient + accessories) must not exceed 507 lbs (230 kg).
- The headrest (BF755 or HEAD05D) may be mounted to the tabletop.

⚠ Never attempt to unlock the surgical table and to move it with the patient if it is not in transport position. The surgical table may become unbalanced.

⚠ It is strongly recommended that safety barriers or another system to hold the patient in place are used.

⚠ Ensure that the battery is sufficiently charged before moving the surgical table.

⚠ Before moving the surgical table, ensure its path is clear of obstruction. The surgical table is not intended to cross any raised threshold or go up or down steps. Always move the surgical table very carefully.

⚠ During motorized transfer with the surgical table, adapt the speed to the environment (i. e. corridor width, corner angles, doors, wall, etc.).Take care when moving backwards.

⚠ Do not keep objects on the base as they may fall during motorized maneuvers and cause jamming when lowering the column's sliding covers.

Handling the Surgical Table

WARNING

PERSONAL INJURY AND/OR EQUIPMENT DAMAGE

⚠ Handle the surgical table carefully during the operation or transfer. Do not exert excessive lateral loads on it, do not pull or push the surgical table with the accessories or with the rails.

⚠ Handle the main hand control and the override control carefully. Do not press the keypad with too much force or use unsuitable objects to do so.

⚠ Handle the cables carefully when connecting or disconnecting the main hand control, the joystick or the power cord set.

⚠ Do not sit on either of the two ends of the surgical table, especially when the tabletop is not centered, as this can cause the surgical table to become unbalanced.

⚠ Do not stand on the base of the surgical table because it can damage the covers.

⚠ When the power cord is connected to the surgical table, and is lying on the floor, pay attention to the power cord when moving around the surgical table and remove the cable before moving the surgical table.

Weight Capacity

WARNING

PERSONAL INJURY AND/OR EQUIPMENT DAMAGE

⚠ Do not exceed a patient + accessory weight of 507 lbs (230 kg) for the standard described positions and respect the indications and warnings signalled.

⚠ The use of certain extensions may decrease this patient + accessories weight. When extensions are installed on the surgical table, consult the user manuals of these extensions to know the possible weight restrictions related to the use of these extensions.

⚠ Certain positions may cause the tabletop to be significantly off-centered from the column. In these situations, ensure that there is sufficient stability for the type of surgical procedure requirements.

⚠ For all other uses, please contact STERIS. If working intensively on the patient's chest, bringing the tabletop back to a center position on the column is recommended.

Positioning the Patient

WARNING

PERSONAL INJURY AND/OR EQUIPMENT DAMAGE

⚠ The positions described in this manual are solely examples. The accessories required are not always shown. Under no circumstance should they replace the instructions given by the surgical team in charge of the patient.

⚠ Ensure that both the patient and the surgical table are stable when combining tabletop movements (for example reverse trend + lateral tilt).

⚠ Properly secure the patient (ex. using straps), especially when the surgical table has a strong tilt inclination.

⚠ Long surgical procedures can cause tissue compression over bony prominence on patients and result in tissue ischemia, pressure injury, and post operative problems. Monitor and reposition patients during surgical procedures, or use patient positioning aids to alleviate areas of high pressure and allow tissue reperfusion for extended procedures.

Autonomy

WARNING

PERSONAL INJURY AND/OR EQUIPMENT DAMAGE

⚠ Two 12 V sealed lead batteries are integrated into the base and indicate that the surgical table is autonomous.

⚠ Before using the surgical table, check that the batteries are sufficiently charged.

⚠ The joystick operates in standalone mode using the integrated batteries. Before using the surgical table in Bluetooth (wireless) mode, check that the batteries are sufficiently charged.

Connections

WARNING

RISK OF PERSONAL INJURY & EQUIPMENT DAMAGE

⚠ The wire terminals of the main hand control and joystick are equipped with soft locks that lock into place. Do not pull on the main hand control or joystick to disconnect them.

⚠ The E-Serve connection is only to be used by STERIS service team and with material approved by STERIS.

⚠ Never try to connect equipment to the surgical table that is not supplied by STERIS or not approved to be used with the surgical table.

⚠ Always use the power cord provided by STERIS.

⚠ The operator should never touch the patient when the operator is plugging or unplugging the main hand control or the joystick, or when the operator is handling the connectors of these devices.

Potential Equalization Conductor

WARNING

PERSONAL INJURY AND/OR EQUIPMENT DAMAGE

⚠ Connect together potential equalization conductors to avoid problems with differing potentials across networks.

⚠ Potential equalization conductors protect patients from electric shock during procedures where even small potentials may cause harm.

⚠ When a potential equalization conductor is connected, the table MUST NOT be used with a defibrillator.

⚠ When using potential equalization conductors in an electro-medical system, this system must meet IEC 60601-1 requirements.

Antistatic Link

WARNING

PERSONAL INJURY AND/OR EQUIPMENT DAMAGE

⚠ If antistatic connection is necessary, use only the pads that have been specially developed for this product. Put the patient in direct contact with them and use the surgical table on an antistatic floor, or connect it to an equipotential cable using the socket designed for this.

Electrical Safety

WARNING

PERSONAL INJURY AND/OR EQUIPMENT DAMAGE

⚠ Surgical table is factory set to operate at a certain voltage. Use of any other power supply could result in serious personal injury or surgical table damage

⚠ To prevent any risk of electric shock, the surgical table should only be connected to a grounded power supply system.

⚠ The surgical table must always be positioned so that the power cord can be disconnected easily when connected to the surgical table.

⚠ Disconnecting the power cord and switching the main power switch in the OFF “O” position isolates the CMAX™ X-Ray table from supply mains

⚠ It is preferable to use the batteries instead of the mains if there are doubts about the protective ground in the operating room.

⚠ The use of high-frequency surgical equipment, cardiac defibrillators, and cardiac defibrillator monitors with the surgical table creates a risk of burns, explosion, or electrical shock.

⚠ In case of any damage to the power supply, power cord, plug, or IEC receptacle, do not connect the equipment and immediately contact STERIS.

Accessories

WARNING

PERSONAL INJURY AND/OR EQUIPMENT DAMAGE

⚠ If accessories made by other manufacturers are used, it is the user’s responsibility to check that they are compatible with the surgical table and that they do not endanger the patient and the surgical team.

⚠ Before connecting accessories to the surgical table, check the general state of them to ensure that they are not degraded and that the connection system is not damaged.

⚠ The end user shall especially ensure that the intended use and the conditions of use (including the safe working load) of these accessories made by other manufacturers are compatible with the claims of the surgical tables.

⚠ Check that the extensions and accessories are properly attached to the surgical table before each surgical procedure.

Emergency Mode

WARNING

PERSONAL INJURY AND/OR EQUIPMENT DAMAGE

⚠ Only use the override control system in emergency mode.

⚠ When the override control system is used, the other control systems including the main hand control are automatically deactivated. The ALS sensors are deactivated, so when the tabletop is moved watch out for potential conflicts between the sections. The default pre-selected patient orientation is the normal orientation; there is no inverted orientation. There is no LED for table immobilization. When the override control system is used always make sure that the surgical table is stable and correctly locked to the floor. Before starting tabletop floating, ensure that the tabletop is level and check that the surgical table is stable, particularly when moving the tabletop into extremely off-center positions.

Cleaning

WARNING

PERSONAL INJURY AND/OR EQUIPMENT DAMAGE

⚠ Do not use chlorine-based products or other products containing chlorine derivatives; these can cause excessive corrosion,

⚠ Do not use acetone products ; these can cause damage to the base and column covers.

⚠ Ensure protective covers are properly installed over receptacles to prevent fluids from reaching them. After cleaning the table, ensure no residual water remains near the receptacles.

⚠ Before cleaning the surgical table, ensure that it is OFF. Put on the socket protection covers, if necessary.

⚠ Do not immerse the main hand control or the joystick and do not spray cleaning products directly onto the sockets.

Environmental Conditions

WARNING

PERSONAL INJURY AND/OR EQUIPMENT DAMAGE

⚠ Do not use the surgical table in the presence of flammable anesthetic gas, or in areas subject to explosive risks.

⚠ The surgical table must not be used in the vicinity of strong magnetic fields (MRI environment).

⚠ The surgical table and associated extensions and accessories are not intended to operate in an oxygen rich environment

⚠ The surgical table and associated extensions and accessories are not intended for outdoor use, and shall not be exposed to high humidity for extended periods.

X-Ray Radiation

WARNING

PERSONAL INJURY AND/OR EQUIPMENT DAMAGE

⚠ The surgical table's materials, when exposed to X-Ray radiation, can produce and expel harmful radiation to the environment that is potentially harmful to users. Radiological protection devices should therefore be worn by users when using X-Ray equipment with CMAX™ X-Ray surgical tables.

Maintenance

WARNING

PERSONAL INJURY AND/OR EQUIPMENT DAMAGE

⚠ The safety, reliability and proper operation of the surgical table can only be ascertained and granted by STERIS. Repair and adjustments should only be assigned to STERIS technicians or STERIS-approved technicians.

⚠ Observe the maintenance schedule set out by STERIS and described in this document.

⚠ Never try to adjust or repair the surgical table.

⚠ No repair may be undertaken on the surgical table before all electrical power is switched OFF and locked out/tagged out.

⚠ During maintenance and repair, only original parts must be used.

⚠ No part of the surgical table shall be serviced or maintained while in use with the patient.

Main Hand Control and Joystick Storage

CAUTION

PERSONAL INJURY AND/OR EQUIPMENT DAMAGE

⚠ When the main hand control and joystick are not in use, hang them on a table rail to prevent any buttons being accidentally pressed.

Electromagnetic Compatibility

CAUTION

PERSONAL INJURY AND/OR EQUIPMENT DAMAGE

⚠ If the surgical table is used close to other electrical equipment, ensure that these comply with the regulations in force regarding electromagnetic compatibility.

⚠ If high frequency equipment (such as a defibrillator) is being used, make sure that the manufacturer's instructions are rigorously followed.

FCC Part 15: This equipment has been tested and found to comply with the limits for a Class A digital device, pursuant to part 15 of the FCC Rules. These limits are designed to provide reasonable protection against harmful interference when the equipment is operated in a commercial environment. This equipment generates, uses, and can radiate radio frequency energy and, if not installed and used in accordance with this manual, may cause harmful interference to radio communications. Operation of this equipment in a residential area is likely to cause harmful interference in which case the user will be required to correct the interference at his own expense.

Symbols Used

4.1 Product Labels

Table 4-1. Definition of Symbols

Symbol	Definition
	Refer to instruction manual - signifies that the instruction manual/booklet must be read.
	Equipotential plug
	Product Reference
	Serial Number - indicates the manufacturer's serial number so that a specific medical device can be identified.
	Alternating Current (AC).
	Alternating current
	Direct current
	Frequency of the unit.
	Amps of the unit.
	Manufacturer - indicates the medical device manufacturer, as defined in the EU Directives.
	Date of manufacture - Indicates the date when the medical device was manufactured.

Table 4-1. Definition of Symbols (continued)

Symbol	Definition
	Country of origin
	Importer
	Electronic instructions - indicates the need for the user to consult the instructions for use.
	Caution - indicates that caution is necessary when operating the device or control close to where the symbol is placed, or that the current situation needs operator awareness or operator action in order to avoid undesirable consequences.
	UK marking - device fully complies with applicable UK legislation.
	UK authorized representative
	Swiss authorized representative
	Medical device - indicates the item is a medical device as defined in the EU Directives.
	CE Marking - device fully complies with applicable European Union legislation.
	Protection from electric shock class 1, type B.
	Protection from water splashing
	WEEE; waste electrical and electronic equipment

Table 4-1. Definition of Symbols (continued)

Symbol	Definition
	Unique device identifier - indicates a carrier that contains unique device identifier information.
	Temperature limit
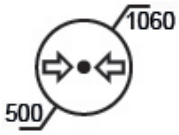	Atmospheric pressure limitation
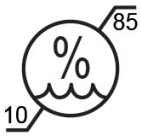	Humidity limitation
	Power rating of unit (volt-ampere)
	Do not stack
	This way up
	Fragile, handle with care
	Handle with care

4.2 Main Hand Control Symbols

Table 4-2. Main Hand Control Symbols

Symbol	Description
	Movement direction control
	Selection control
	Patient/tabletop orientation control
	Trendelenberg/reverse trendelenberg control
	Table up/down control
	Tilt left/right control
	Lock/unlock control
	Stop control
	Level control
	Position memory control

4.3 TFT Screen Symbols

Table 4-3. TFT Screen Symbols

Symbol	Description
	Table on pads (locked) icon
	Table on caster wheels (unlocked) icon
	Hand control active icon
	E-Serve active icon
	Bluetooth active icon
	Joystick active icon
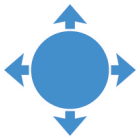	Enable floating icon
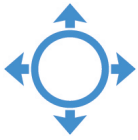	Floating in progress icon
	Motorized wheel icon
	Cycle in progress icon
	Bluetooth joystick battery charge status

Table 4-3. TFT Screen Symbols (continued)

Symbol	Description
	Bluetooth joystick battery discharge status
	Fault indicator icon

4.4 Joystick Symbols

Table 4-4. Joystick Symbols

Symbol	Description
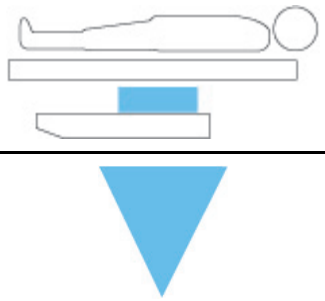	Table down control
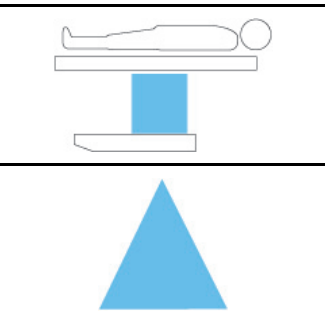	Table up control
	Float lock/unlock control
	Return to level control

4.5 Override Control and Connection Panel Symbols

Table 4-5. Override Control Symbols

Symbol	Description
	Lock/unlock float control
	Trendelenburg control
	Reverse Trendelenburg control
	Table up control
	Table down control
	Tilt left control
	Tilt right control
	Lock control
	Unlock control

Table 4-5. Override Control Symbols (continued)

Symbol	Description
	Emergency mode control
	Bluetooth control
	Return to level control
	Stop control

Table 4-6. Connection Panel Symbols

Symbol	Description
	Accessory ports (not used)
	E-Serve connector (only for STERIS tech use)
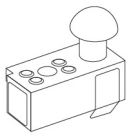	Joystick connector port
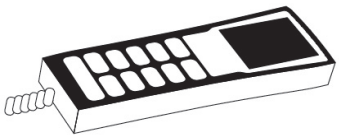	Main hand control connector port

Specifications and Requirements

5.1 Product Specifications

The CMAX™ X-RAY surgical table is equipped with a carbon fiber floating tabletop, is operated in standalone mode and can be used for powered patient transfer.

The optional motorized control handle and powerful powered wheel provide a unique solution for patient transfer under optimal conditions of ergonomics and safety.

Due to the long transverse and longitudinal slide, CMAX™ X-RAY surgical table offers exceptional radiological access.

The CMAX™ X-RAY surgical table is suitable for imagery-assisted surgical procedures and has been designed to support patient + accessory weights of up to 507 lbs (230 kg) in positions such as those described in this manual.

The powered sections can be moved using the main hand control or the joystick in dual-mode (wired/Bluetooth).

The innovative integrated power supply allows the user to choose whether to operate the surgical table on battery or mains power.

The column movements are powered, with the exception of the transverse and longitudinal slides of the tabletop (floating).

The E-Serve™ smart electronics fitted on the CMAX™ X-RAY surgical table mean that diagnostics and maintenance can be carried out via computer by STERIS or STERIS-approved technicians (errors, fault log).

The integrated ALS™ (Auto Limit Sensor) linear and angular position sensors prevent collisions between the powered sections and the surgical table or floor.

Table 5-1. CMAX™ X-Ray Image Guided Surgical Table Models

REF	Description	V	Hz	A	GTIN (DI)
CMAXXRAY	CMAX™ X-Ray Image Guided Surgical Table	230–240 voltage set by internal switch	50/6-0	4.0	0072499524-4897
CXRAY120-EU	CMAX™ X-Ray Image Guided Surgical Table	120 voltage set by internal switch	50/6-0	4.0	0072499524-5603
CXRAY220-EU	CMAX™ X-Ray Image Guided Surgical Table	220 voltage set by internal switch	50/6-0	4.0	0072499524-5610
CXRAY230-US	CMAX™ X-Ray Image Guided Surgical Table	230–240 voltage set by internal switch	50/6-0	4.0	0072499524-5627
CXRAY120-US	CMAX™ X-Ray Image Guided Surgical Table	120 voltage set by internal switch	50/6-0	4.0	0072499524-5634
CXRAY220-US	CMAX™ X-Ray Image Guided Surgical Table	220 voltage set by internal switch	50/6-0	4.0	0072499524-5641

5.2 Electrical Characteristics

Table 5-2. Electrical Characteristics

Mains	100/120/220/230-240 V~ 50/60 Hz 4 Amp Max
Protection	Class I with Type B Applied Parts
Equipotential plug (not provided)	DIN42801
Main cable (provided)	4.6 m/15’ straight plug to table inlet
Internal fuses (accessible to STERIS or STERIS-trained technicians only)	**F1**: 4 AT1, 250 V, 5 x 20 mm PC: 35 A @ 250 V~ (Transformer, 31 V~ SEC. – battery charger and P.S. logic)
	F2: 15 AT, 250 V, 6.3 x 32 mm PC:750 A @250 V~ (Transformer, 21 V~ SEC. – slide, pump and master control power)
	F3, F4: 12.5 AT, 250 V, 6.3 x 32 mm PC:200 kA @250 V~ (F3 – slide motor power; F4 – pump power)
	F5: 2 AT, 125 V, 2.69 x 6.1 mm PC:50 A @125 V~/V , Surface-mount PCB (+24 V supply to master control)
	F6, F7: 4 AT, 250 V, 5 x 20 mm PC:1500 A @250 V~ (mains AC power inlet)
	1 x F30A 125 V 10,3 x 38 mm PC10 kA (motorized wheel) F= fast acting fuse ; PC = breaking capacity
Batteries	2 x 12 V 28 Ah sealed lead acid
Batteries fuse	1 x T30A, 125 V, 6.3 x 32 mm PC10 kA T = slow acting fuse ; PC = breaking capacity
Batteries life	When recharged on time (when the hand control indicates the ORANGE level gauge is reached), up to 60 surgical procedures
Charging time	12 hours
Charge/discharge indicator	Mobile base: charge indicator Hand control: charge and discharge indicator
Intermittent running	3 minutes/hour during surgical procedure
Resistance to liquids	IPX4 (for surgical tables and accessories
Anti-static path	Via pads and antistatic feet
Applied parts	Pads

5.3 Radiocommunication Characteristics

Table 5-3. Radiocommunication Characteristics

Frequency bands used	2.40 Ghz-24835 Ghz
Maximal radio-frequency power transmitted on used frequency bands	10 dBm

5.4 Mechanical Characteristics

Table 5-4. Mechanical Characteristics

Aluminum equivalency of tabletop with 80 mm (3”) thickness pad	1.3 mm (0.05") Al 100 kV 5 mA 5 sec/HVL 3.6 mm (0.14") Al
Aluminum equivalency of tabletop without pad	0.8 mm (0.03") Al 100 kV 5 mA 5 sec/HVL 3.6 mm (0.14") Al
Floor clearance/wheel diameter	16 mm (0.6”)/100 mm (3.9”)
Left tilt/right tilt	20°/20° (±2°) – When transverse floating is > 50 mm/1.9", tilt is not allowed.
Longitudinal slide	0 mm/700 mm (stroke 700 mm/27.6”) ±10 mm (0.4")
Maximum patient weight capacity up/down	270 kg/595 lbs, centered on the column
Maximum weight of patient + accessories with articulation	230 kg/507 lbs
Table weight (unloaded)	330 kg/727.5 lbs
Tabletop length	2000 mm/78.7” (excluding extensions)
Tabletop width	520 mm/20.5” (560 mm/22.1” including rails)
Transverse slide	130 mm (5.1”)/130 mm (stroke 260 mm/10.2”) ±10 mm
Trendelenburg/reverse Trendelenburg	30°/-30° (±2°)
Height up/down	1040 mm (40.9”) / 680 mm (26.8”) (stroke 360 mm/14.2”) ±10 mm (0.4")

5.5 Main Materials Used

Table 5-5. Main Materials Used

Covers	Polycarbonate
Structures	High-performance coated steel and aluminum

Table 5-5. Main Materials Used (continued)

Tabletop	Carbon fiber
Bellows	PVC
Pads	PU foam with conductive welded cover

5.6 Tabletop Dimensions

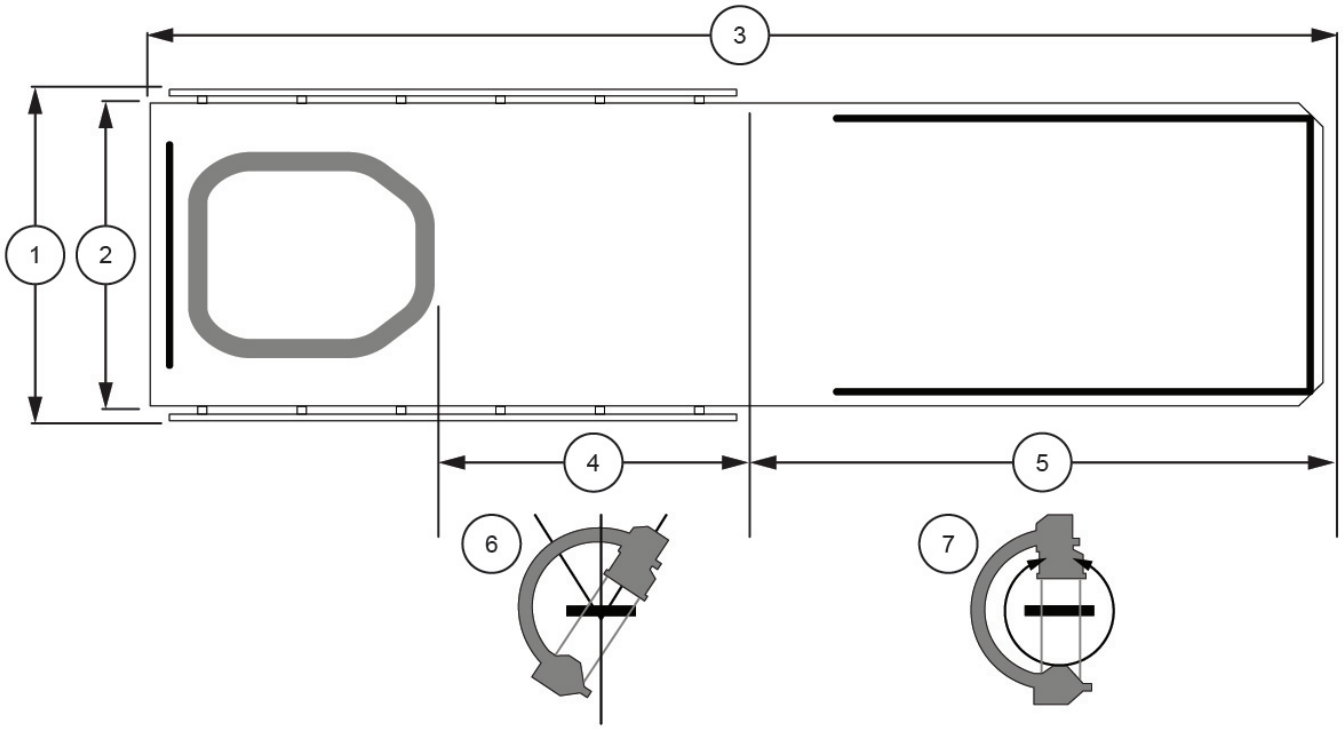

Figure 5-1. Tabletop Dimensions

Table 5-6. Tabletop Dimensions

1	22.1” 560 mm
2	20.5” 520 mm
3	78.7” 2000 mm
4	19.3” 490 mm
5	39.4”

Table 5-6. Tabletop Dimensions (continued)

	1000 mm
6	66° (2 x 33°)
7	360° radiotransparency range

5.7 Articulation Specifications

Table 5-7. Articulation Specifications

Up and Down		
1	26.8” 680 mm	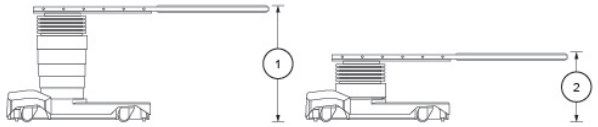
2	40.9” 1040 mm	
Float		
Longitudinal		
1	0” 0 mm	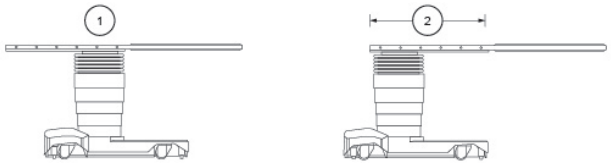
2	26.8” 680 mm	
Transverse		
1	5.1” 130 mm	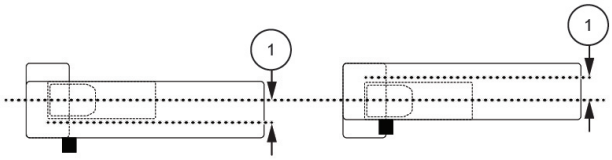
Tilt		
1	20°	
2	20°	
Trendelenburg/Reverse Trendelenburg		

Table 5-7. Articulation Specifications (continued)

1	30°	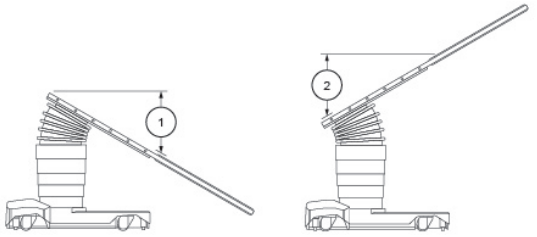
2	30°	

5.8 Environmental Requirements

Operation

Ambient Temperature	50 °F (10 °C) – 104 °F (40 °C)
Humidity	10% – 70% (non-condensing)
Pressure	800–1060 hPa

Transport/Storage

NOTE: Table on casters, battery fuses removed.

Ambient Temperature	32 °F (0 °C) – 122 °F (50 °C)
Humidity	10% – 85% (non-condensing)
Pressure	500–1060 hPa

Floor Surface Perforation Pressure

0.13 kg/cm² (13 kPa) with a patient + accessories load of 595 lbs (270 kg).

Local Pressure on the Floor

15.59 kg/cm² (1529 Mpa) with a patient + accessories load of 595 lbs (270 kg).

Component Identification

6.1 Exterior Components

The following components are located on the exterior of the surgical table. See *Figure 6-1* and *Table 6-1*.

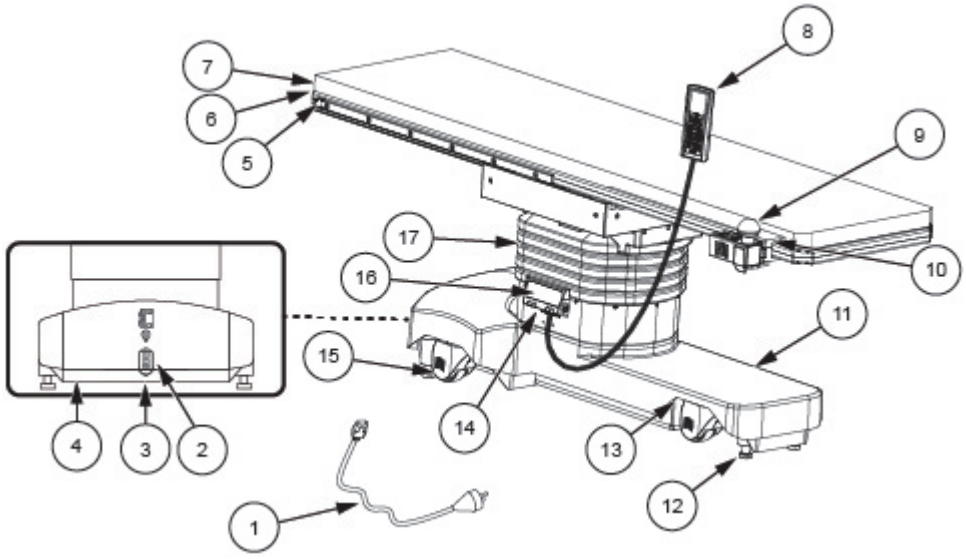

Figure 6-1. Exterior Components

Table 6-1. Exterior Components

1	Power cord	The power cord is used to connect the surgical table to a mains power source.
2	Electrical characteristics label	The electrical characteristics label displays the electrical information for the surgical table.
3	Mains connection panel	See *Section 6.2, Mains Connection Panel* for more information.
4	Identification label	The identification label displays information about the surgical table.
5	Standard accessory rails	The standard accessory rails can be used to attach certain accessories to the surgical table.
6	Head section interface	The head section interface is part of the tabletop and used as a connection point for certain accessories.

Table 6-1. Exterior Components (continued)

7	Floating tabletop	The floating tabletop is the main support system for the patient and is controlled using either the main hand control, joystick, or override control.
8	Main hand control	See *Section 6.3, Main Hand Control* for more information.
9	Joystick control	See *Section 6.4, Joystick Control* for more information.
10	Carbon fiber rail	The carbon fiber rail allows for attachment of accessories using a dedicated interface at the carbon fiber end of the tabletop. This is the location that the joystick is attached.
11	Mobile base	The mobile base supports the column and contains various internal components.
12	Floor locks	The floor locks are used to lock the surgical table in place to the floor.
13	Battery fuses	The battery fuses protect electrical circuits, wiring and connected devices from excessive current flow in the event of a short or a fault.
14	Override Control	See *Section 6.5, Override Control and Control Panel* for more information.
15	Caster wheels	The caster wheels are used to move the surgical table.
16	Connection panel	The connection panel is located on the bottom of the override control. See *Section 6.5, Override Control and Control Panel* for more information.
17	Column	The column supports the tabletop and contains various internal components.

6.2 Mains Connection Panel

The following components are located on the mains connection panel. See *Figure 6-2* and *Table 6-2*.

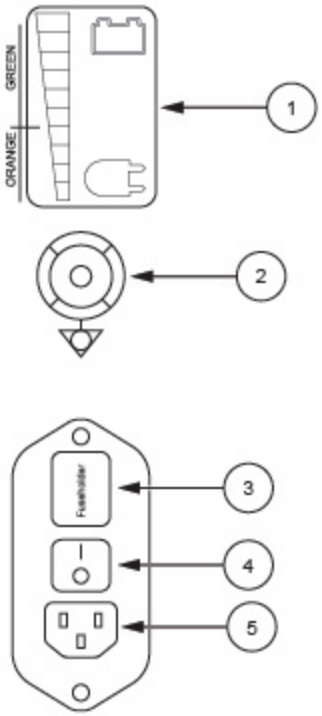

Figure 6-2. Mains Connection Panel

Table 6-2. Mains Connection Panel

1	INTELLIPOWER® dual power LED display	The INTELLIPOWER® dual power LED display indicates the level of battery charge and whether the surgical table is on mains power or battery power.
2	Equipotential plug	The equipotential plug creates and earth-bound zone to prevent significant volt touches.
3	Fuseholder	The fuseholder houses the main fuse for the surgical table.
4	Main power switch	The main power switch is used to switch the surgical table ON or OFF>
5	Mains connection	The mains connection is used to connect the power cord to the external power source.

6.3 Main Hand Control

The following components are located on the main hand control. See *Figure 6-3* and *Table 6-3*.

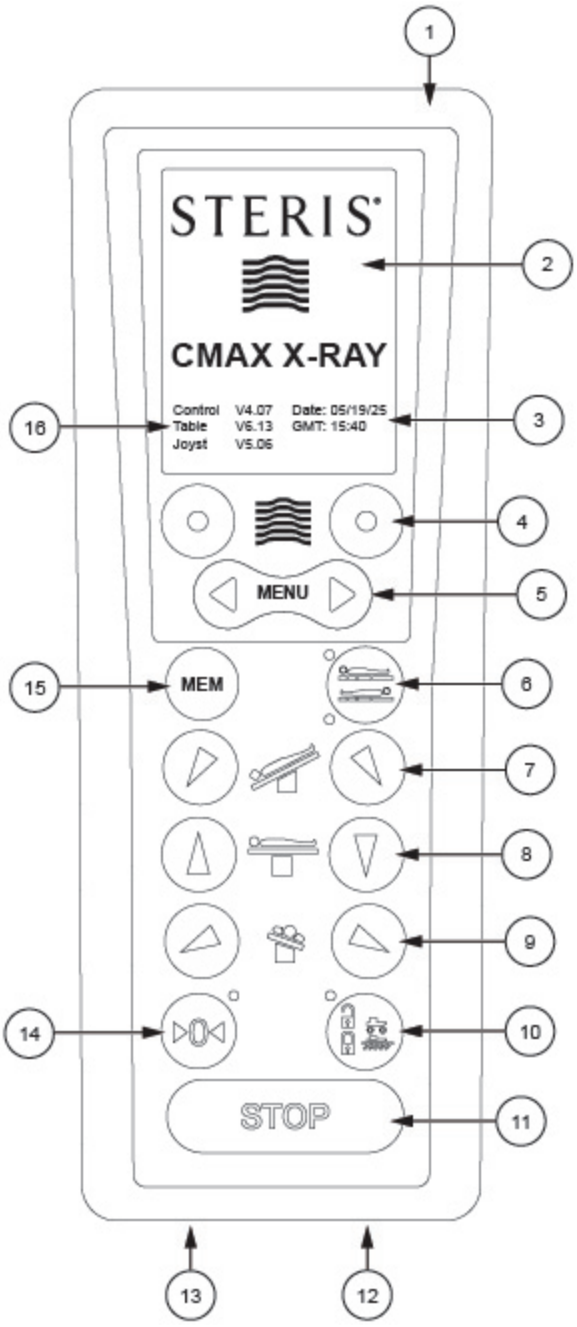

Figure 6-3. Main Hand Control

Table 6-3. Main Hand Control

1	Touch and audible sensors	The touch sensor vibrates in the event of an anti-collision alert (ALS). The audible sensor beeps in the event of a movement that requires special attention or at the end of a specified movement.
2	Color screen	The color screen displays battery status, floor lock status, active interface status and displays surgical table movements via the integrated motion sensors..
3	Date and time	The date and time is displayed on the color screen. The date format is DD/MM/YY and the time format is HH:MM.
4	Movement direction control	The movement direction control moves the patient/tabletop up/left and down/right.
5	Menu selection control	The menu selection control allows selection of menu active function.
6	Patient/tabletop orientation control	The patient/tabletop orientation control is used to switch between normal and reverse patient/tabletop orientation. The LEDs indicate the current patient/tabletop orientation and pressing the control switches to the other orientation.
7	Trend/reverse trend control	The trendelenberg/reverse trendelenberg control is used to lower the head (TREND) or feet (REVERSE TREND) of the patient/tabletop.
8	Table up/down control	The table up/down control is used to raise or lower the patient/tabletop.
9	Tilt left/right control	The tilt left/right control is used to the tilt the patient/tabletop left or right.
10	Lock/unlock control	The lock/unlock control is used to lock and unlock the surgical table in place to the floor.
11	Stop control	The stop control is used to stop the surgical table and all movements.
12	Spiral cable connection	The spiral cable connection is used to connect the main hand control to the surgical table via a connection on the override control.
13	Motorized transfer control connection	The motorized transfer control connection allows information on the motorized wheel speed and activation to the main hand control.
14	Level control	The level control is used to return the patient/tabletop to the level position. When the LED is BLUE the patient/tabletop is currently leveled.

Table 6-3. Main Hand Control (continued)

15	Position memory control	The position memory control is used to cycle through saved patient/tabletop positions.
16	Software versions	The software versions display the current software version of the main hand control, surgical table, and joystick.

6.4 Joystick Control

The following components are located on the joystick. See *Figure 6-4* and refer to *Table 6-4*.

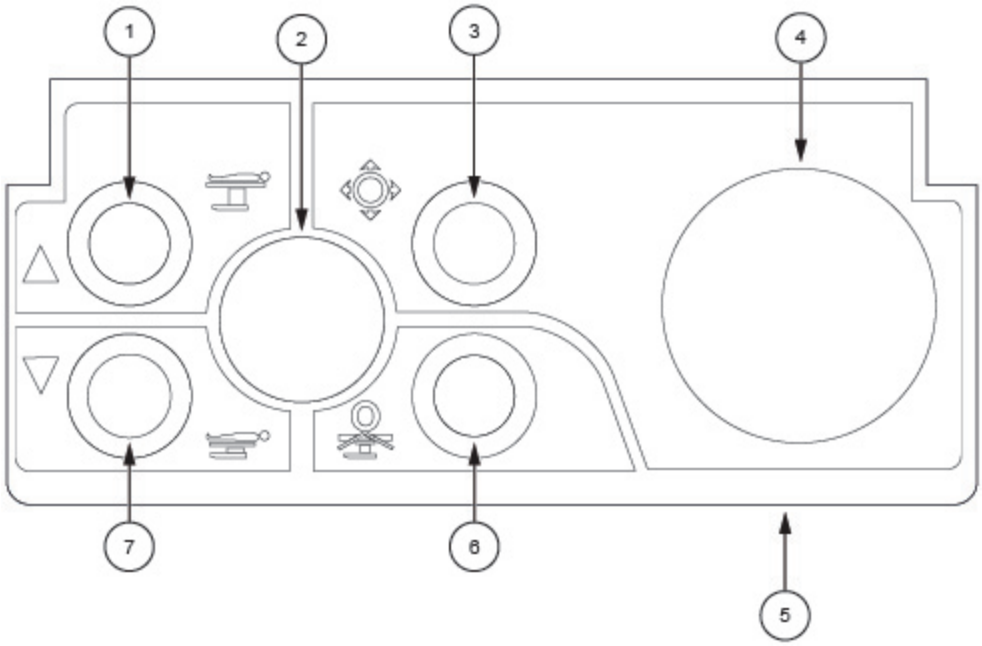

Figure 6-4. Joystick

Table 6-4. Joystick

1	Table up control	The table up control is used to raise the patient/tabletop.
2	Joystick indicator light	The joystick indicator light is used to indicate joystick status and monitor controls.
3	Float lock/unlock control	The float lock/unlock control is used to activate and de-activate the ability to use the float feature.
4	Float control knob	The float control knob is used to control the float feature of the surgical table.
5	Locking tab	The locking tab is used to secure the joystick to the rails of the surgical table.
6	Return to level control	The return to level control is used to return the patient/tabletop to the level position.
7	Table down control	The table down control is used to lower the patient/tabletop.

6.5 Override Control and Control Panel

The following components are located on the override control. See *Figure 6-5* and *Table 6-5*.

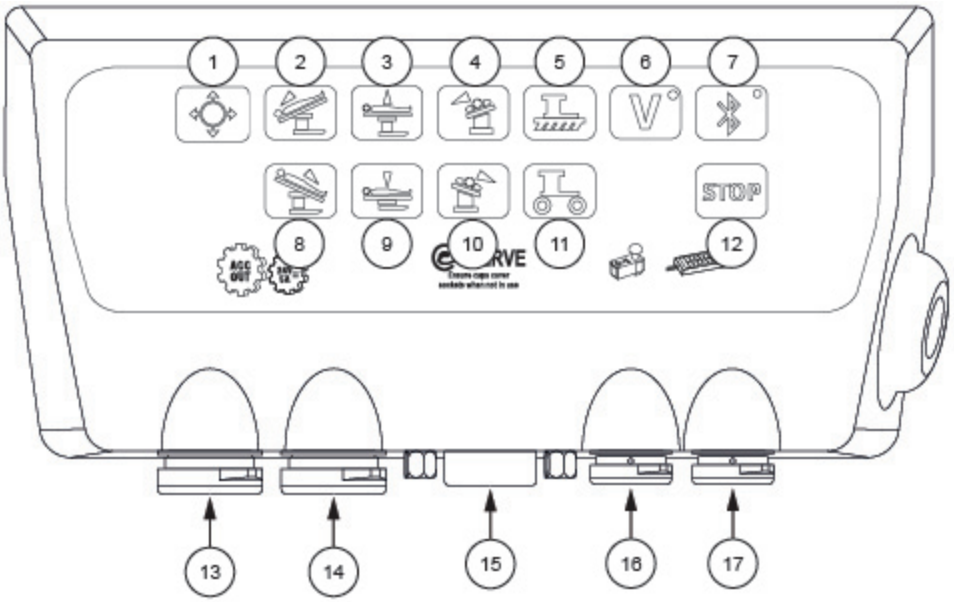

Figure 6-5. Override Control and Control Panel

Table 6-5. Override Control and Control Panel

1	Lock/unlock float control	The float lock/unlock control is used to activate and de-activate the ability to use the float feature.
2	Trend control	The trendelenberg control is used to lower the head of the patient/tabletop.
3	Table up control	The table up control is used to raise the patient/tabletop.
4	Tilt left control	The tilt left control is used to the tilt the patient/tabletop left.
5	Lock control	The lock control is used to lock the surgical table in place to the floor.
6	Emergency mode control	The emergency mode control is used in conjunction with a desired surgical table movement. The emergency mode control and the desired movement control must be pressed simultaneously for the movement to start. A BEEP indicates the movement has started and attention should be paid to the positioning of the tabletop.
7	Bluetooth control	The Bluetooth control is used to turn ON/OFF the surgical tables ability to be operated through

Table 6-5. Override Control and Control Panel (continued)

		Bluetooth. When active, the indicator light is illuminated.
8	Reverse trend control	The reverse trendelenberg control is used to lower the feet of the patient/tabletop.
9	Table down control	The table down control is used to lower the patient/tabletop.
10	Tilt right control	The tilt right control is used to the tilt the patient/tabletop right.
11	Unlock control	The unlock control is used to unlock the surgical table from the floor.
12	Stop control	The stop control is used to stop the surgical table and all movements.
13	Accessory ports (not used)	These two auxiliary ports are not used.
14		
15	E-Serve connector (only for STERIS tech use)	The E-Serve connector is used by STERIS service to perform maintenance and service on the surgical table.
16	Joystick connector port	The joystick connector port is where the joystick is connected to the surgical table when in wired mode.
17	Main hand control connector port	The main hand control connector port is where the main hand control is connected to the surgical table.

Surgical Table Setup

7.1 Install and Remove Battery Fuse

NOTE: For safety reasons, the fuse protecting the batteries is packaged separately during shipment.

Install Battery Fuse

Follow this procedure to install the battery fuse.

1. Insert the fuse into the separately provided fuse holder.
2. Insert the fuse (1) and fuse holder into the fuse case. See *Figure 7-1*.

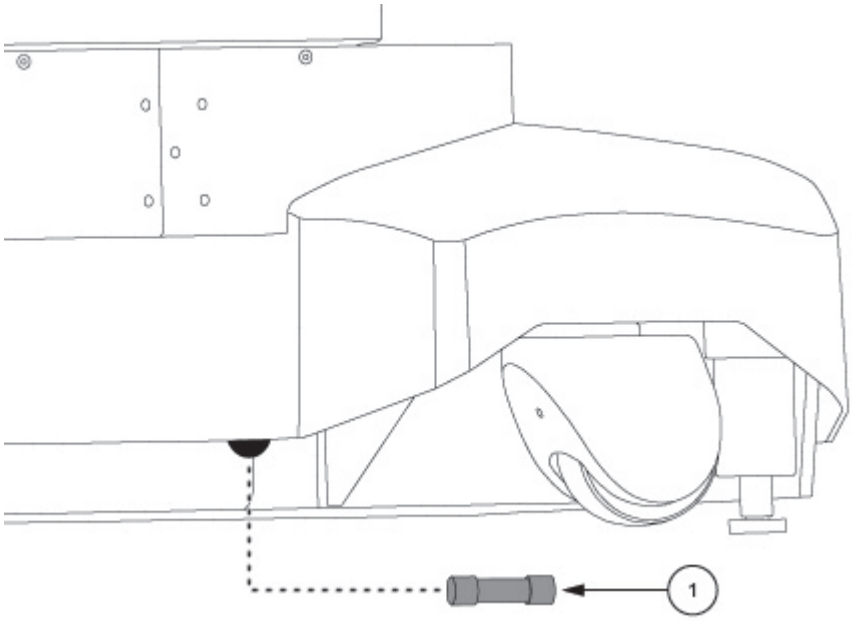

Figure 7-1. Install Battery Fuse

3. Using a screwdriver, push and turn by ¼ in order to lock the fuse holder.
4. Test proper installation by switching on the surgical table with the main hand control without using the mains.

Remove Battery Fuse

NOTE: If the surgical table is not used for a long period of time (>1 month) remove the fuse in order to limit battery discharge and maintain battery functionality.

Follow this procedure to remove the battery fuse.

1. Using a screwdriver, push and turn by ¼ in order to unlock the fuse holder.
2. Remove the fuse and fuse holder from the fuse case.

7.2 Plug the Surgical Table into Mains Power

Follow this procedure to plug the surgical table into mains power.

1. Check that the mains voltage matches the indications on the surgical table.
2. Connect the power cord (1) to the IEC connector.
3. Connect the power cord to a mains socket. See *Figure 7-2*.

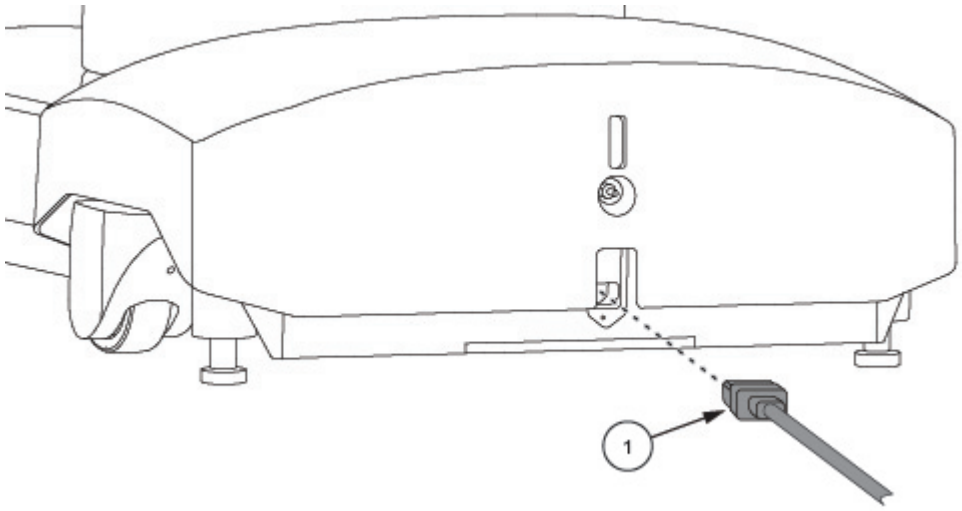

Figure 7-2. Plug the Surgical Table into Mains Power

7.3 Connect and Disconnect the Main Hand Control

Connect the Main Hand Control

Follow this procedure and refer to *Figure 7-3* to connect the main hand control.

NOTE: The wired main hand control has priority over the E-Serve™ connection.

NOTE: The wired main hand control turns OFF automatically after three minutes if it has not been used.

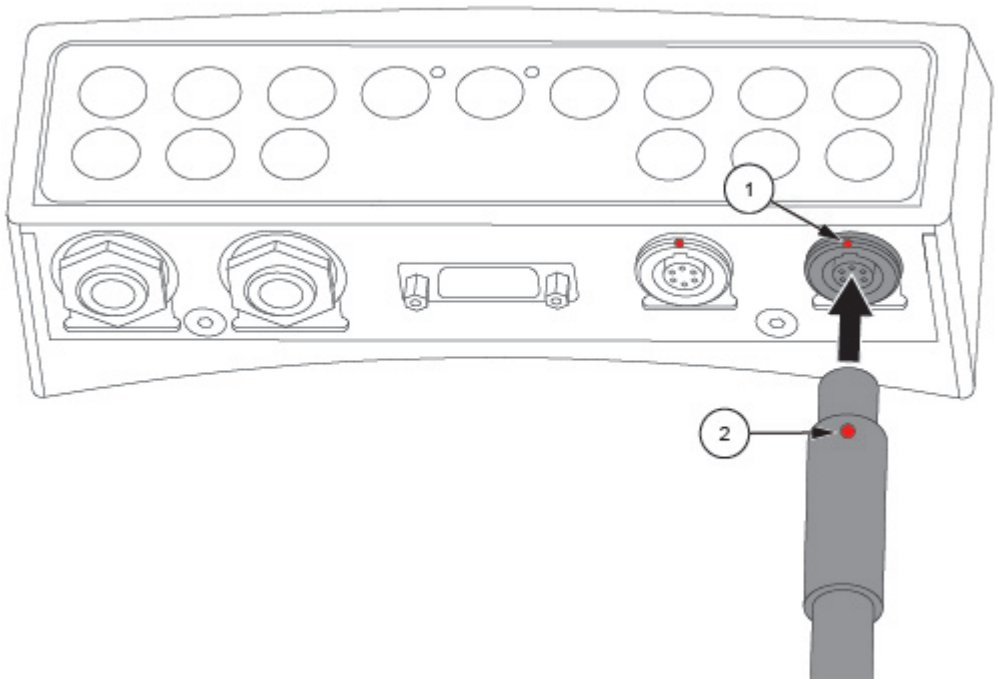

Figure 7-3. Connect the Main Hand Control

1. Pull down the protective cover on the main hand control socket.
2. Align the red dot (2) on the main hand control cable connector with the red dot (1) on the main hand control socket of the override control.
3. Insert the main hand control connector until it “clicks,” indicating that it is correctly connected.
4. Hang the main hand control on a surgical table rail when not in use to prevent accidental unintended movements,

Disconnect the Main Hand Control

Follow this procedure and refer to *Figure 7-3* to disconnect the main hand control.

1. Switch OFF the main hand control by pressing STOP button STOP.
2. The main hand control connector is equipped with a lock. Unlock the connector by pulling the ring backwards. Never just pull on the cable.
3. Ensure that the protective cover is covering the main hand control socket after removal.

7.4 Connect and Disconnect the Joystick

Connect the Joystick

Follow this procedure and refer to *Figure 7-4* to connect the joystick.

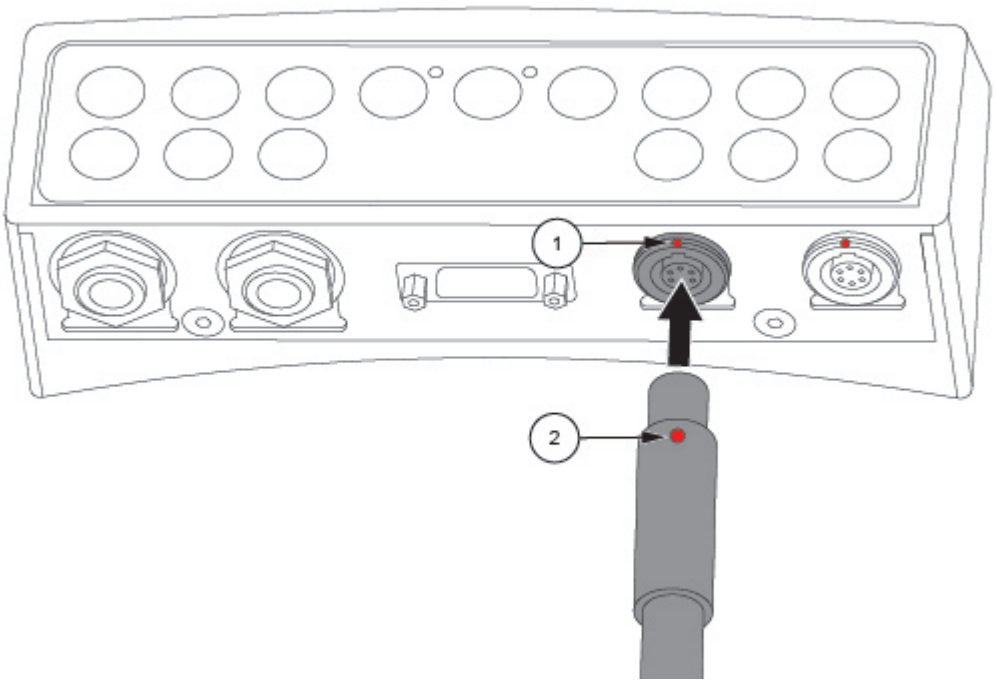

Figure 7-4. Connect the Joystick

1. Pull down the protective cover on the joystick socket.
2. Align the red dot (2) on the joystick cable connector with the red dot (1) on the joystick socket of the override control.
3. Insert the joystick connector until it “clicks,” indicating that it is correctly connected.

Disconnect the Joystick

Follow this procedure and refer to *Figure 7-4* to disconnect the joystick.

1. The joystick connector is equipped with a lock. Unlock the connector by pulling the ring backwards. Never just pull on the cable.
2. Ensure that the protective cover is covering the joystick socket after removal.

Install the Joystick on Surgical Table Rail

Follow this procedure and refer to install the joystick on a surgical table rail.

1. Lift the locking tab (1) and position the joystick along the surgical table rail (2). See *Figure 7-5*.

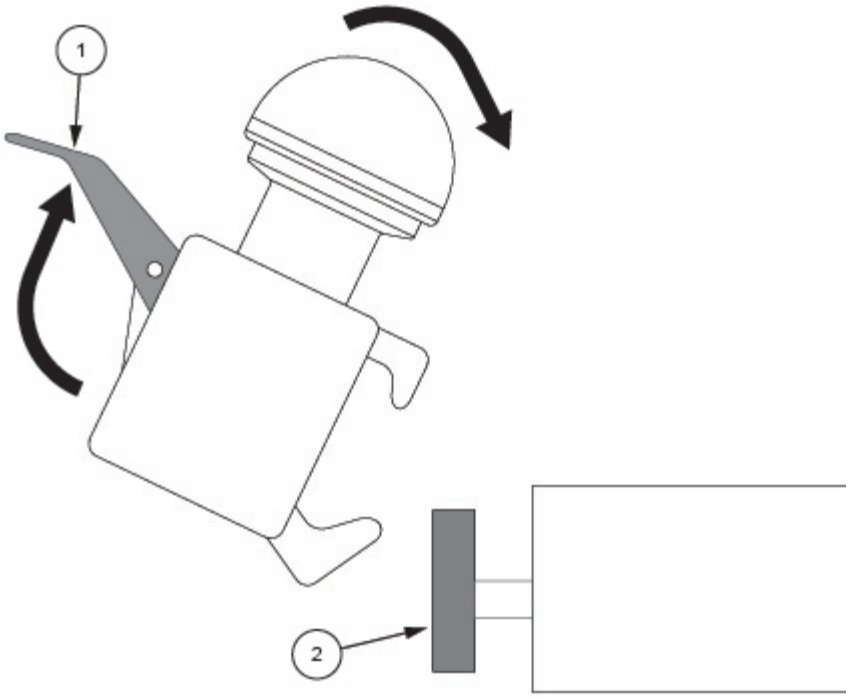

Figure 7-5. Install Joystick

2. Place the joystick on the surgical table rail (1). See *Figure 7-6*.

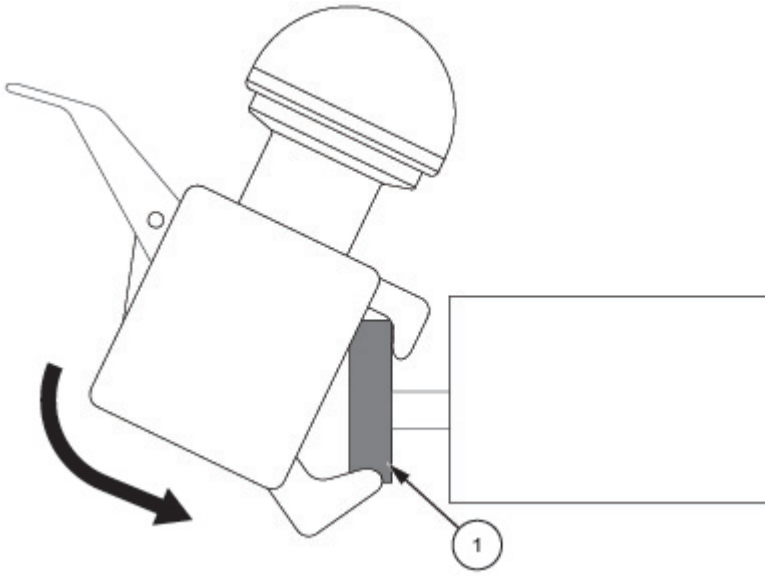

Figure 7-6. Install Joystick

3. Close the locking tab (1) to secure the joystick onto the surgical table rail. See *Figure 7-7*.

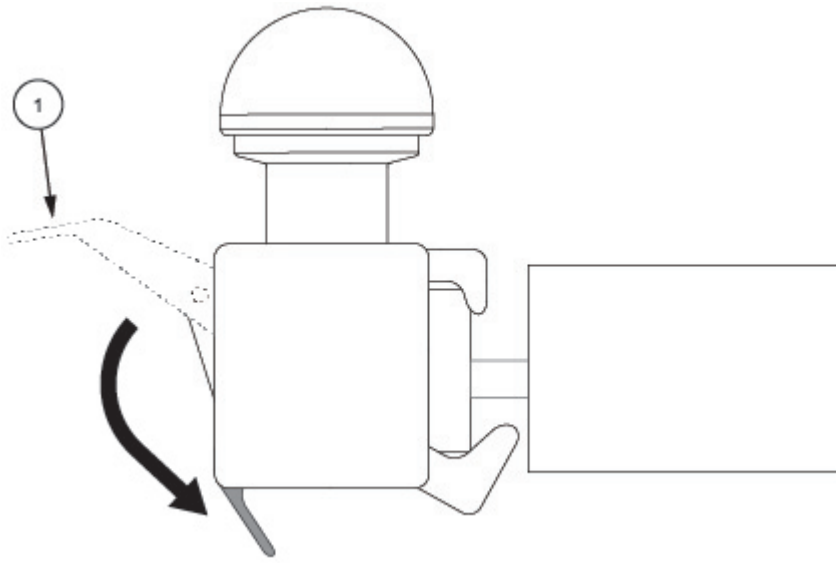

Figure 7-7. Install Joystick

Remove the Joystick from the Surgical Table Rail

Reverse the steps in *Install the Joystick on Surgical Table Rail* to remove the joystick from the surgical table rail.

7.5 Install and Remove Motorized Transfer Handle

Install the Motorized Transfer Handle

Install the Accessory Handle

Install Main Hand Control

Left Hand/Right Hand Positioning

Remove Hand Control

Remove the Motorized Transfer Handle

Remove the Accessory Handle

NOTE: It is easier to install the motorized transfer handles when the surgical table is in the horizontal position.

IMPORTANT: *Do not fit the handles to friction leg sections type LEG10C. The motorized transfer handle and accessory handle are not compatible with the back extensions for shoulder surgery type BACK05C. The installation of 2 control handles is imperative on LEG20C and LEG25C leg sections*

The complete system comprises two handles:

- 1 motorized transfer handle featuring a remote control connection.
- 1 accessory handle to assist with control.

Install the Motorized Transfer Handle

Install the motorized transfer handle as follows:

1. Place the motorized transfer handle (1) in the rail and ensure the clamping lever stays open. See *Figure 7-8*.

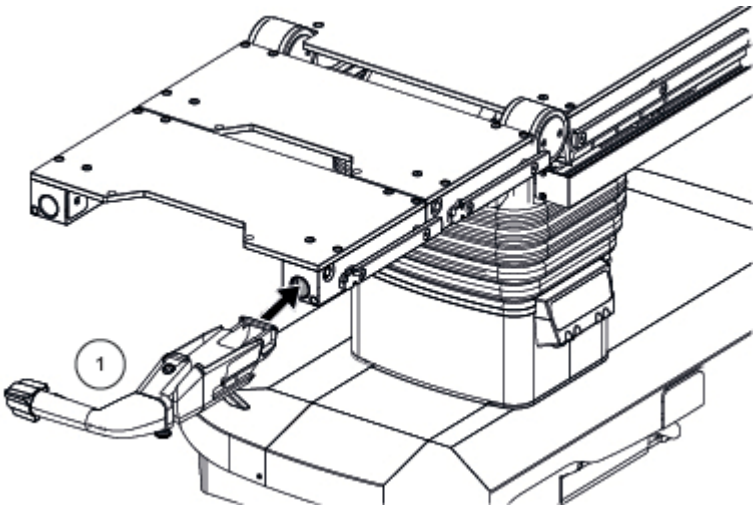

Figure 7-8. Insert the Motorized Transfer Handle

2. Insert the motorized transfer handle into the rail until it “clicks”.
3. Lock the clamping lever (1). See *Figure 7-9*.

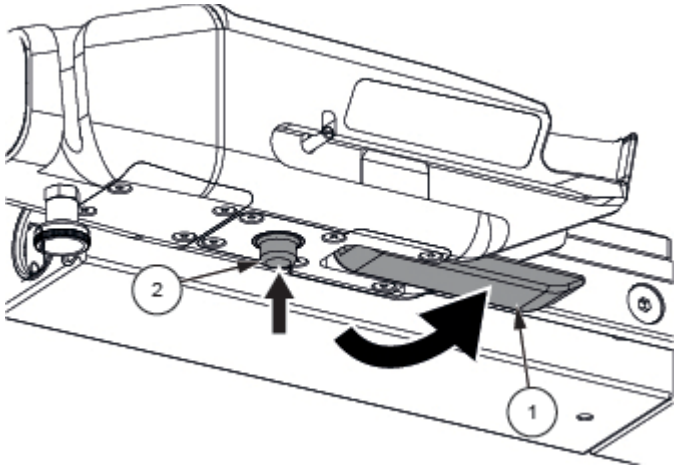

Figure 7-9. Lock the Motorized Transfer Handle

Install the Accessory Handle

Install the accessory handle as follows:

1. Push the accessory handle (1) in the fully into the rail and ensure the wing screw (2) stays unlocked. See *Figure 7-10*.

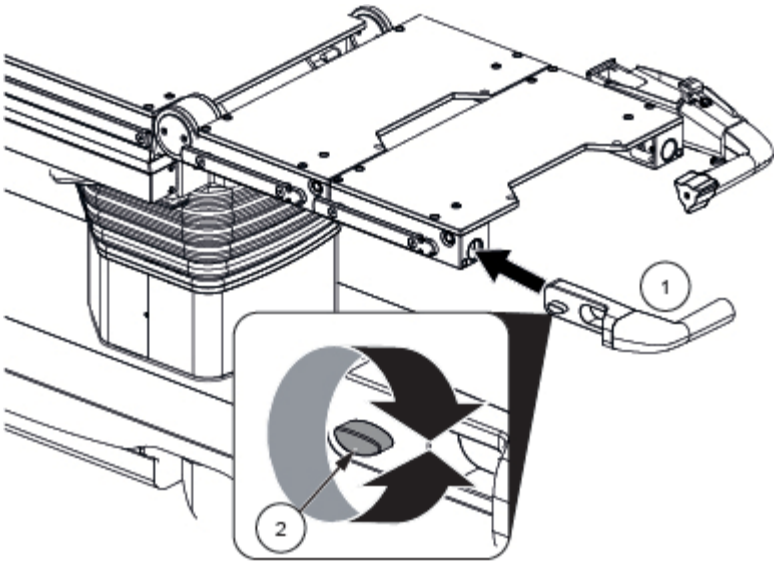

Figure 7-10. Install Accessory Handle

2. Turn the wing screw (2) to tighten it. Pull the accessory handle to check that it is secure. See *Figure 7-10*.

Install Main Hand Control

Install the hand control as follows:

1. Feed the connection cable through the groove in the motorized transfer handle. See *Figure 7-11*.

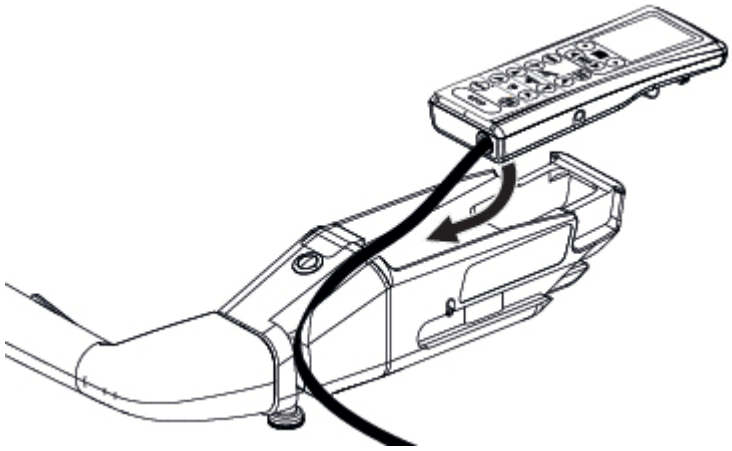

Figure 7-11. Install Main Hand Control

2. Slide the main hand control into the motorized transfer handle. See *Figure 7-12*.

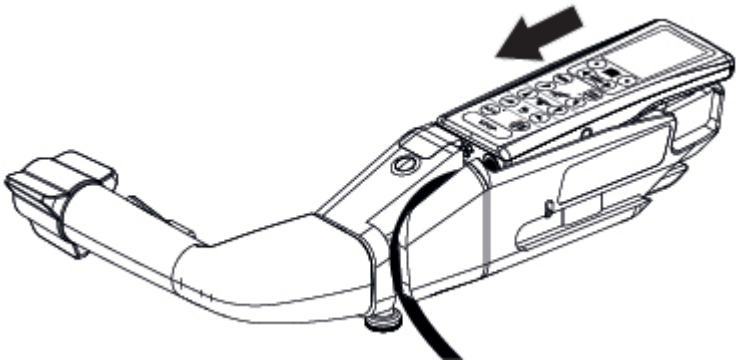

Figure 7-12. Install Main Hand Control

3. Push the main hand control into the motorized transfer handle to secure in place. See *Figure 7-13*.

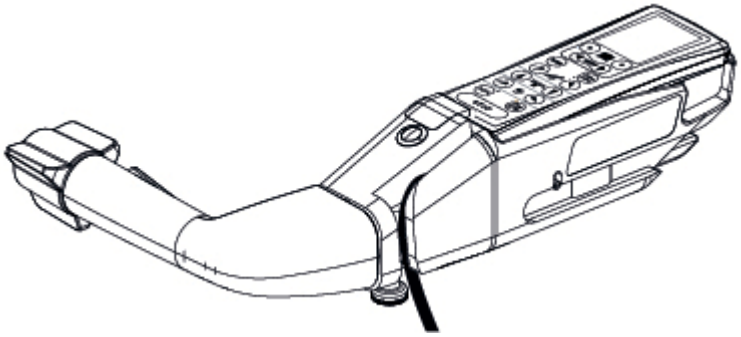

Figure 7-13. Install Main Hand Control

Left Hand/Right Hand Positioning

Change the orientation of the motorized transfer handle as follows:

1. The motorized transfer handle is inserted on the right (1) or left side (2) of the surgical table on the accessory rails or the extension rails. See *Figure 7-14*.

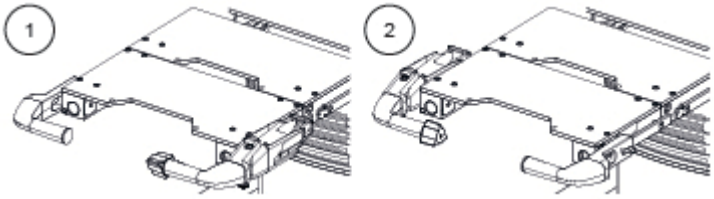

Figure 7-14. Motorized Transfer Orientations

2. To rotate the motorized transfer handle, pull the position latch and rotate the motorized transfer handle to the desired position. See *Figure 7-15*.

   NOTE: The direction of travel is automatically recognized during rotation.

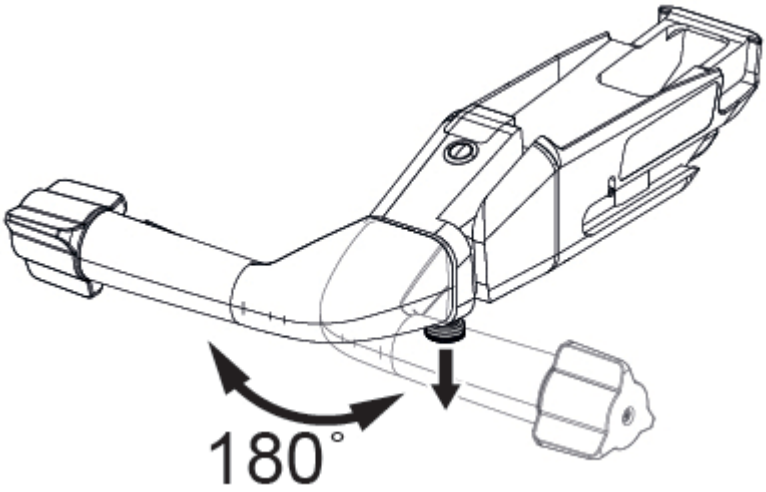

Figure 7-15. Change Motorized Transfer Handle Orientation

Remove Hand Control

Remove the hand control by reversing the steps in the installation instructions.

Remove the Motorized Transfer Handle

Remove the motorized transfer handle as follows:

1. Lower the locking lever (1), keep the rail lock (2) pressed and pull outward on the motorized transfer handle. See *Figure 7-9*.

Remove the Accessory Handle

Install the accessory handle as follows:

1. Turn the wing screw (2) to loosen it. Pull the accessory handle to remove it. See *Figure 7-10*.

7.6 Examples of Mounting Accessories to Tabletop

Below are examples of how the accessories are installed. Full installation instructions for adaptable accessories are provided with each accessory.

Installing/Removing the Siderail Adaptors

1. Place the accessory on either side of the tabletop. 2. Slide the accessory down the rail. 3. Lock the accessory by turning it one quarter-turn.	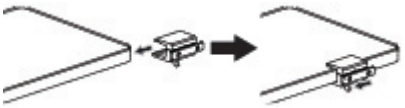

Installing/Removing Rotary Clamps

1. Insert the accessory rod through the clamp. 2. Mount the clamp/rod assembly onto the table by inserting it over the rail. 3. Turn the vise clockwise to secure the assembly.	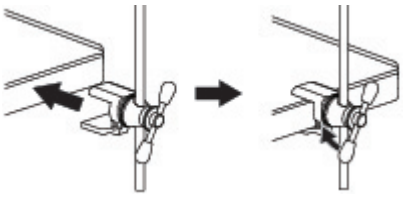

Mounting the Catheter Extension

1. Hold the tray at an angle by the bottom end of the tabletop. 2. Insert the extension hooks under the tabletop rail spacers. 3. Lower the tray in the horizontal position.	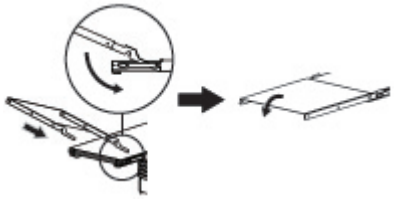

Installing/Removing the Head Section

1. Insert the two head section pins into the two tabletop housings. 2. Pull the head section out to remove the head section from the tabletop.	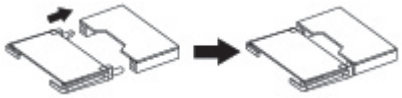

Operation

8.1 General Information

Operating the Surgical Table on Mains Power

Each time the surgical table is connected to the mains power, the charger restarts at maximum charge. There is a wait of approximately 2 minutes before the bar graph display is correct on the main hand control. See *Table 8-1* for information on the charge level indication on the main hand control when the surgical table is operating on mains power.

Table 8-1. Main Hand Control in Mains Power Mode

Main Hand Control Display		Corresponding Charge Level
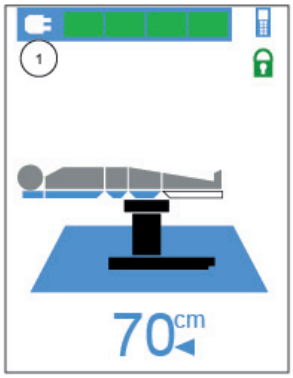	 Green	Greater than 70% and less than 100%.
	 Orange	Greater than 30% and less than 70%.
	 Red	Less than 30%.

Operating the Surgical Table on Batteries

When the surgical table is operating on battery power the level is indicated on the main hand control. The status can be read when the surgical table is not moving. See *Table 8-2* for information on the charge level indication on the main hand control when the surgical table is operating on battery power.

Table 8-2. Main Hand Control in Battery Power Mode

Hand Control Display		
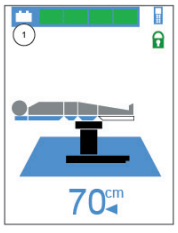	 Fixed Green	Greater than 70% and less than 100%.
	 Fixed Orange	Greater than 30% and less than 70%. Charging is recommended. Refer to *Section 9.3, Battery Charging*.
	 Fixed Red	Less than 30%. Charging is required. Refer to *Section 9.3, Battery Charging*.

Table 8-2. Main Hand Control in Battery Power Mode (continued)

Hand Control Display		
	 Flashing Red	0. Battery level is critical and charging is required. Plug in mains power. Refer to *Section 9.3, Battery Charging*.
If the entire bar graphic is blinking this means there is a problem. Recharging the battery is imperative or the surgical table will automatically shut OFF. If the problem persists, contact STERIS.		

8.2 Main Hand Control Operation

WARNING

PERSONAL INJURY AND/OR EQUIPMENT DAMAGE

⚠ When the main hand control is not in use, hanging it on a surgical table rail to prevent any buttons being accidentally pressed is recommended. Handle the main hand control and its cable with care.

The main hand control includes:

- A 5 m spiral cord with a connector at each end making it easy to replace.
- An elastomer housing equipped with a hook so that it can be attached to the side rails of the surgical table.
- A back-lit keypad for easy location of the buttons in the dark.
- A 2.4" color screen for easy communication with the user.

Movements, except for FLOAT, are allowed even when the surgical table is on castors. Before starting any surgical procedure, check that the surgical table is LOCKED to the floor and stable. When moving the surgical table with a patient, ensure that there are no obstacles along the intended path. Move the surgical table very carefully.

Turning ON the Surgical Table

Pressing any button (except the STOP button 

) turns the surgical table on but does not start any movements. A welcome screen is then displayed for a few seconds. Then press the button for the required movement.

Turning OFF the Surgical Table

When the STOP button 

is pressed, the surgical table immediately stops operating. The AUTO-OFF function puts the surgical table into standby mode after three minutes if it is no longer in use in order to avoid any inadvertent movements.

Explanation of Colors On Color Screen

	Not selected, neutral status.
	Selection in progress.
	Movement in progress.
	Normal status.
	Caution required.
	Alarm or fault detected.

Table Floor Lock/Unlock

Press on the main hand control and use to LOCK/UNLOCK the surgical table.

The mobile base of the surgical table allows it to be moved around the operating area so that it can be relocated or so that the floor can be cleaned. Floor LOCK/UNLOCK is performed automatically using the hand control.

For safety reasons and to ensure that the surgical table is stable on its castors, the tabletop should be returned manually to the central position "0" to be able to unlock the surgical table from the floor. If the condition is not met, the color screen will turn red as shown in *Figure 8-1* indicting the surgical table should be correctly positioned prior to UNLOCK.

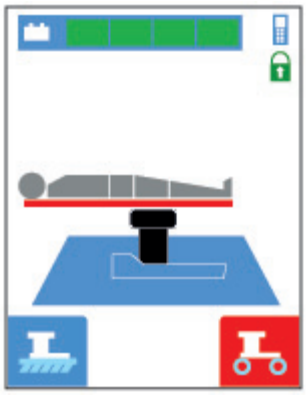

Figure 8-1. Unable to Unlock Surgical Table

Once the LOCK/UNLOCK button has been selected, the blue LED flashes and the LOCK/UNLOCK pictograms appear on the screen. Confirm by pressing one of the interactive buttons. See *Figure 8-2*.

NOTE: During locking/unlocking, which takes several seconds, all the buttons except the STOP button STOP are disabled.

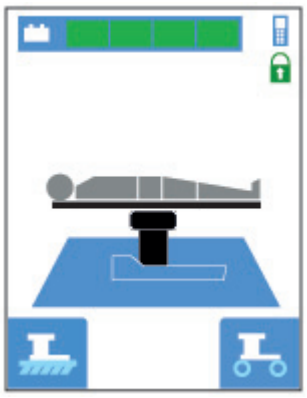

Figure 8-2. Lock/Unlock

Activate Floor Lock

Follow this procedure and refer to *Figure 8-3* to LOCK the surgical table to the floor.

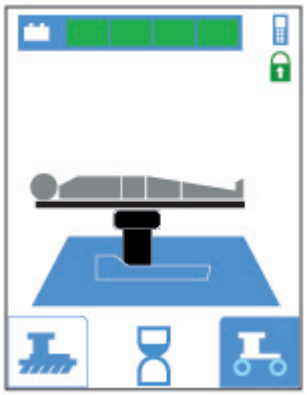

Figure 8-3. Activate Floor Lock

1. Press the LOCK/UNLOCK button . The blue LED flashes and the LOCK/UNLOCK icons are displayed on the color screen
2. Press the LOCK icon .
3. The LOCK icon changes color and the hourglass appears.
4. The blue indicator in the button is lit when the surgical table is locked to the floor and the LOCK icon is closed.

Disable Floor Lock

Follow this procedure and refer to *Figure 8-4* to UNLOCK the surgical table from the floor.

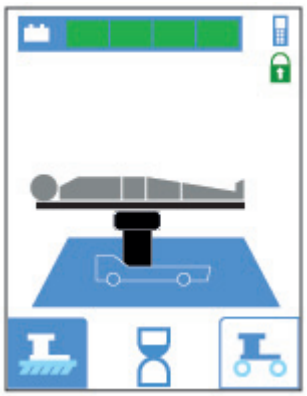

Figure 8-4. Disable Floor Lock

1. Slide the tabletop longitudinally as far as the head end.
2. Slide the tabletop transversely to the center.
3. Press the LOCK/UNLOCK button . The blue LED flashes and the LOCK/UNLOCK symbols are displayed on the color screen
4. Press the UNLOCK icon . The UNLOCK icon changes color and the hourglass appears.
5. The button remains a constant blue once the table is unlocked and the LOCK icon is open.

Patient Orientation

Depending on the type of surgery involved, the patient orientation can be reversed on the surgical table. The patient is thus in the reversed orientation on the surgical table and the ORIENTATION button is used to reconfigure the main hand control to keep the right patient movement when using the controls.

When the surgical table is switched OFF, the previous position is stored in memory. Every time the surgical table is reconfigured, ensure that it corresponds to the selected patient orientation.

To change the patient orientation follow this procedure.

1. Press the ORIENTATION button on the main hand control to set the correct orientation. The blue LED indicates the current orientation and is also displayed on the color screen.

Normal Orientation	Reverse Orientation
	

Return Tabletop to Level

The RETURN TO LEVEL button enables the tabletop to be returned to a level position. Although this action automatically accounts for the patient's equilibrium on the tabletop, it should nonetheless be monitored during movements.

To return the tabletop to level follow this procedure.

1. The blue LED on the RETURN TO LEVEL button is OFF if the tabletop is not level.
2. Press the RETURN TO LEVEL button, the blue LED will flash and the color screen will display .
3. The blue LED will be steady when the tabletop is level.
4. Hold down the RETURN TO LEVEL button and the cycle continues with a quick check that the table is LOCKED/UNLOCKED.

Trend/Reverse Trend the Tabletop

TREND/REV TREND movements are obtained by directly pressing the corresponding buttons on the keypad. During the movement, the screen displays icons of the movement in progress and the angle with respect to level.

To TREND the tabletop press and hold the TREND button while monitoring the color screen until the desired angle is achieved.

To REV TREND the tabletop press and hold the REV TREND button while monitoring the color screen until the desired angle is achieved.

Raise and Lower the Tabletop

UP/DOWN movements are obtained by directly pressing the corresponding buttons on the keypad. During the movement, the screen displays icons of the movement in progress and the distance from the floor.

To RAISE the tabletop press and hold the UP button while monitoring the color screen until the desired height is achieved.

To LOWER the tabletop press and hold the DOWN button while monitoring the color screen until the desired height is achieved.

Tilt the Tabletop Left/Right

TILT movements are obtained by directly pressing the corresponding buttons on the keypad. During the movement, the screen displays icons of the movement in progress and the angle with respect to level.

To TILT the tabletop LEFT press and hold the TILT LEFT button while monitoring the color screen until the desired angle is achieved.

To TILT the tabletop RIGHT press and hold the TILT RIGHT button while monitoring the color screen until the desired angle is achieved.

8.3 Joystick Control Operation

The joystick can be used to RAISE/LOWER the tabletop, RETURN TO HORIZONTAL and to activate and use the FLOAT function.

WARNING

PERSONAL INJURY AND/OR EQUIPMENT DAMAGE

⚠ Before using the joystick, check that it is correctly mounted on the surgical table rail, by applying small lateral loads.

⚠ Lock FLOAT before removing the joystick from the surgical table rail.

Joystick Indicator Light Information

See *Figure 8-5* and refer to *Table 8-3* for an explanation of the indicator light (1) on the joystick.

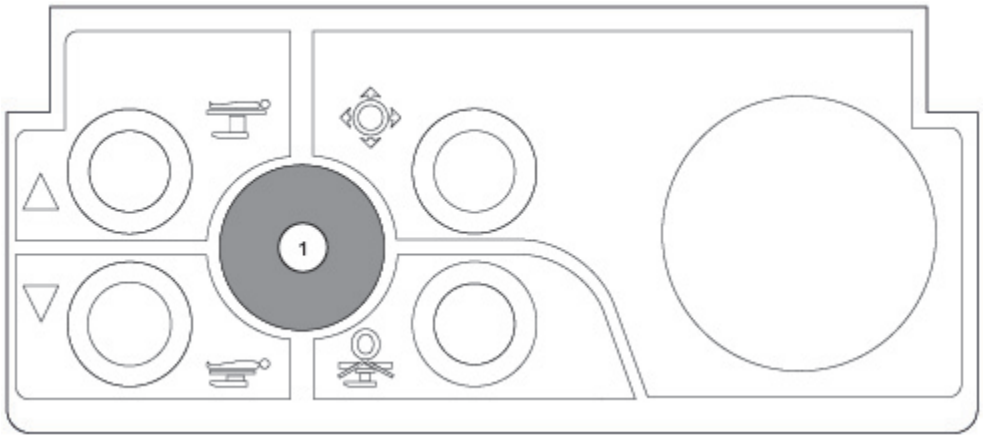

Figure 8-5. Light Indicator

Table 8-3. Light Indicator

Light Status	Description	Meaning
	White flash on each initial actuation, then OFF.	The tabletop moves UP or DOWN.
	Flashing white then steady green on completion while actuated.	The tabletop moves to the horizontal position and stops.
	Steady green (if LEVEL is performed).	FLOAT is enabled.
	Flashing white (if LEVEL is not performed).	FLOAT is disabled.
	Flashing green.	The tabletop is in FLOAT mode.

Table 8-3. Light Indicator (continued)

Light Status	Description	Meaning
	OFF.	The joystick is OFF.
	Flashing blue, then steady blue for two seconds when the connection is made, then OFF.	The tabletop is controlled with the joystick in Bluetooth mode.
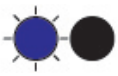	Flashing blue for 30 seconds then OFF if connection is not found.	The joystick is not connected in Bluetooth mode.
	Steady red (low batteries).	Movements are disabled.

Joystick Operation

The joystick can be used in wired mode or Bluetooth mode. If the joystick is in wired mode, the joystick icon  and charging icon  are displayed on the main hand control color screen. If the joystick is in Bluetooth mode, the Bluetooth icon  is displayed on the main hand control color screen.

IMPORTANT: *The Bluetooth protocol is an up to date method for communication between electronic devices. This function won't be available in all countries, as the legislations related to Bluetooth mode is not worldwide harmonized. Therefore, it is the responsibility of the hospital to authorize (or not) the communication method. Therefore, please check internal regulations before using this mode.*

When the joystick is in wired mode it's internal battery will charge. The joystick should be in plugged in every day after use to ensure that it functions correctly and is charged for use in Bluetooth mode.

Pressing the control knob and any button on the joystick at the same time stops all movement, similar to the STOP button 

on the main hand control.

NOTE: When the joystick is in wired mode, the joystick ID is saved so as to be able to check for this specific information in Bluetooth mode. If another joystick is connected to the same surgical table in wired mode, it will read the ID and disable recognition of the previous joystick.

Return Tabletop to Level

To return the tabletop to level follow this procedure.

Press the RETURN TO LEVEL button  on the joystick, the color screen will display .

Raise and Lower the Tabletop

To RAISE the tabletop press and hold the UP button  on the joystick while monitoring the color screen until the desired height is achieved.

To LOWER the tabletop press and hold the DOWN button  on the joystick while monitoring the color screen until the desired height is achieved.

Float the Tabletop

To activate FLOAT follow this procedure.

1. Press the FLOAT button  on the joystick.
2. The FLOAT icon  will display on the main hand control color screen.
3. Use the float knob on the joystick to move the tabletop. The FLOAT icon  on the main hand control color screen changes to indicate that there is a float movement in progress.

8.4 Override Control Operation

If the surgical table is not functioning correctly in battery and mains mode, a dual-mode override system is integrated into the surgical table and includes an override control to replace the main hand control.

When the override control is in use:

- The main hand control is automatically switched OFF.
- The patient orientation described by the buttons is always NORMAL.
- Tabletop FLOAT can only be unlocked if the tabletop is horizontal.
- The sensors, and thus the ALS™ system, are on standby. Take particular care with the patient and look out for potential collisions between table sections.
- Contact STERIS to investigate the need to use the override control.

Simultaneously press the desired movement and the emergency mode control : the movement starts with a beep indicating that attention to the patient and tabletop movement is required.

Stop All Movement

To stop all surgical table movements press the STOP control button .

Lock/Unlock the Surgical Table

Lock the Surgical Table

To lock the surgical table simultaneously press the EMERGENCY MODE CONTROL  and the LOCK control button .

Unlock the Surgical Table

To unlock the surgical table simultaneously press the EMERGENCY MODE CONTROL  and the UNLOCK control button .

Trend/Reverse Trend the Tabletop

Trend the Tabletop

To trend the tabletop simultaneously press the EMERGENCY MODE CONTROL  and the TREND control button 
.

Reverse trend the Tabletop

To reverse trend the tabletop simultaneously press the EMERGENCY MODE CONTROL and the REVERSE TREND control button .

Raise/Lower the Tabletop

Raise the Tabletop

To raise the tabletop simultaneously press the EMERGENCY MODE CONTROL and the TABLE UP control button .

Lower the Tabletop

To lower the tabletop simultaneously press the EMERGENCY MODE CONTROL and the TABLE DOWN control button .

Tilt the Tabletop Left/Right

Left Tilt the Tabletop

To left tilt the tabletop simultaneously press the EMERGENCY MODE CONTROL and the TILT LEFT control button .

Right Tilt the Tabletop

To right tilt the tabletop simultaneously press the EMERGENCY MODE CONTROL and the TILT RIGHT control button .

Turn ON/OFF Surgical Table Float

Turn ON Float

To turn ON surgical table float press the LOCK/UNLOCK FLOAT control button .

Turn OFF Float

To turn OFF surgical table float press the LOCK/UNLOCK FLOAT control button .

Activate/De-activate Bluetooth

Activate Bluetooth

To activate the Bluetooth mode press the BLUETOOTH control button .The indicator light illuminates when Bluetooth mode is activated.

De-activate Bluetooth

To de-activate the Bluetooth mode press the BLUETOOTH control button .The indicator light turns OFF when Bluetooth mode is OFF.

8.5 Motorized Transfer Handle Operation

WARNING

PERSONAL INJURY AND/OR EQUIPMENT DAMAGE

⚠ The user should practice using the motorized wheel without a patient first.

⚠ Secure the patient before using the motorized wheel. Use barriers or another approved system to secure the patient in place.

⚠ The maximum speed control should be adjusted according to the layout of the rooms and corridors, as well as the experience of the operators. When used with a patient, the surgical table is slower to accelerate and brake.

⚠ Never start at full speed. Start slowly and increase speed gradually.

⚠ Do not accelerate around corners. Slow down upon approach.

⚠ Prepare to stop the surgical table by gradually slowing down.

⚠ When reversing, always check for obstacles in the path.

For proper operation of the motorized transfer handle the following conditions should be met before beginning.

Condition	Color Screen Display if Condition is Not Met
The surgical table must be in battery mode and not connected to the mains power supply.	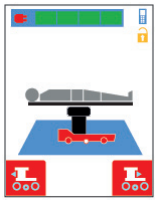
The surgical table must not be locked to the floor. Disengage the floor locks.	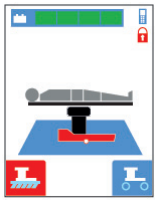

Condition	Color Screen Display if Condition is Not Met
The motorized wheel should be fully lowered. Continue to hold the trigger before activating the drive movement.	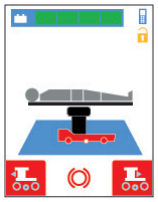
The tabletop should be lower than 900 mm. Lower the tabletop below 900 mm (35.4”)	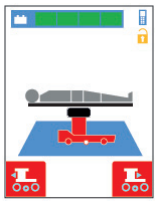
The tabletop should be centred to ensure that the surgical table is stable.	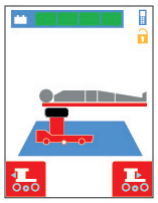

The CMAX™ X-Ray (International) integrates a patented central power wheel which allows the table to circulate outside the operating room with a patient at a maximum speed of 5 km/h, equivalent to a fast walking pace.

The speed may vary a little depending on the floor hardness and the charge level of the embedded batteries.

When delivered, surgical tables are limited in speed to allow users to learn to drive safely.

This maximum allowed speed is adjustable from the hand control and can be changed afterwards.

During movement the screen will show the percentage of the maximum speed permitted by the wheel (from 00% to 99%, customizable in the software). When moving, a speed controller will help better control speed: use it to maintain a steady speed around bends and through crossings.

NOTE: A factory setting deliberately restricts the maximum speeds attainable by delivery tables in keeping with most categories of use. It is possible to override this setting in keeping with the requirements of the user: please contact STERIS to have this setting changed.

Refer to *Figure 8-6* and operate the motorized wheel as follows:

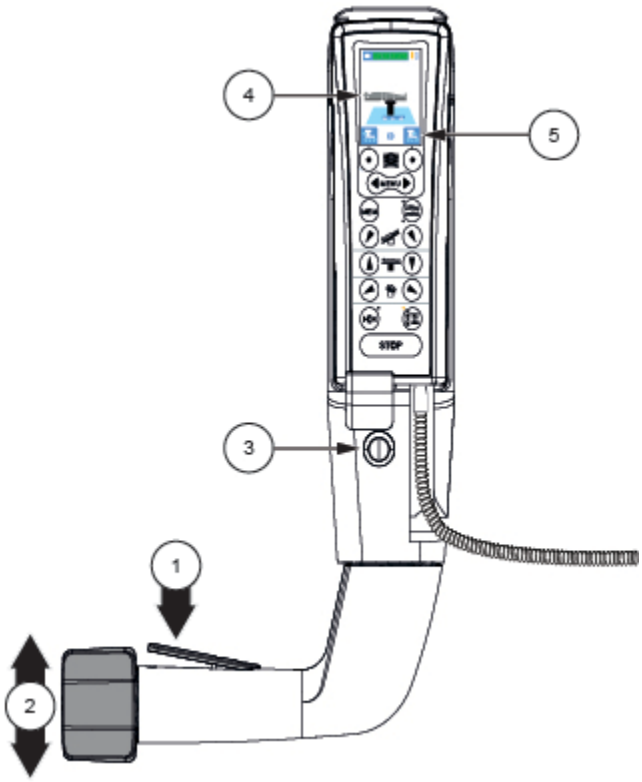

Figure 8-6. Motorized Transfer Operation

1. Engage the motorized wheel by pressing and holding trigger (1).
2. While holding trigger (1) down, gently push the bidirectional accelerator (2) using a thumb. Forward moves the surgical table forward and backward moves the surgical table backwards. The speed is variable based on how far the accelerator is pushed backwards or forwards to the maximum speed set in the software.
3. Change the priority direction of travel (5) if necessary by pressing direction selection button (3) after checking the patient orientation (4) on the hand control. An audible "beep" will indicate the change in direction priority.
4. To gently stop the surgical table, simply release the bidirectional accelerator (2). To apply the brake to the table, release the trigger (1) and hold the surgical table.

   NOTE: The floor locks must be manually engaged if needed.

8.6 Patient Positioning and Radiotransparent Zones

WARNING

PERSONAL INJURY AND/OR EQUIPMENT DAMAGE

⚠ Some extreme positions held for an extended period of time (e.g. very heavy patient at the edge of the tabletop + Rev Trend and maximum slide) can cause jamming of the tabletop. In this case, reset the tabletop to release it.

The surgical table is suitable for imagery-assisted surgical procedures and has been designed to support a maximum patient + accessory weights of up to 507 lb (230 kg) in positions such as those described in this manual.

These position descriptions do not under any circumstances replace the instructions given by the professionals in charge of the patient. All of the accessories required have not been illustrated.

Some extensions also offer weight restrictions that should be checked in the user manuals of these extensions.

The following images display the radiotransparent zones indicated by and the non-radiotransparent zones indicated by with the tabletop in the horizontal position.

Reverse Orientation without Extension

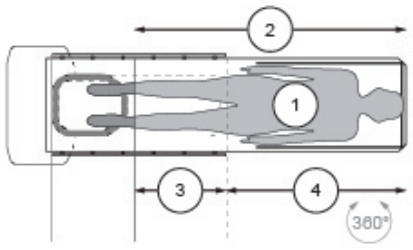	1	Max patient + accessory weight: 507 lb (230 kg)
	2	58.7″ (1490 mm)
	3	19.3″ (490 mm)
	4	39.4″ (1000 mm)

Reverse Orientation with Extension

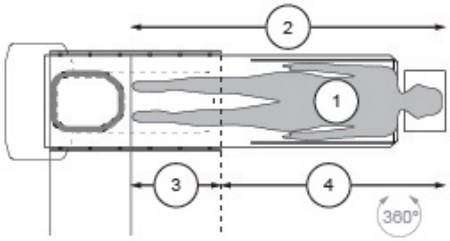	1	Max patient + accessory weight: 298 lb (135 kg)
	2	71.7″ (1820 mm)
	3	19.3″ (490 mm)
	4	52.4″ (1330 mm)

Normal Orientation without Extension

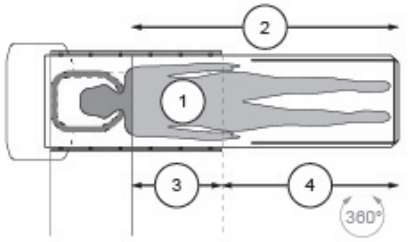	1	Max patient + accessory weight: 507 lb (230 kg)
	2	58.7″ (1490 mm)
	3	19.3″ (490 mm)
	4	39.4″ (1000 mm)

Normal Orientation with Extension

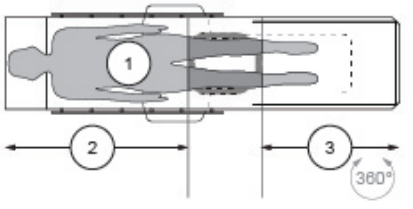	1	Max patient + accessory weight: 507 lb (230 kg)
	2	39.4″ (1000 mm)
	3	31.5″ (800 mm)

Reverse Orientation without Extension

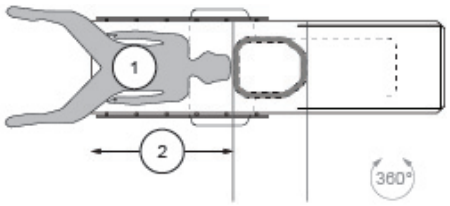	1	Max patient + accessory weight: 298 lb (135 kg)
	2	27.6” (700 mm)

8.7 Surgery Examples

General and Heart Surgery 	**Gynaecological Surgery** (Max patient + accessory weight: 298 lbs (135 kg) 
Nephrectomy Surgery 	**Carotide Surgery** 

Neurosurgery (Max patient + accessory weight: 298 lbs (135 kg) 	**Arm and Hand Surgery** 
Spinal Column Surgery 	**Vascular Surgery** 

8.8 Operating the Surgical Table on Batteries

Table 8-4. Surgical Table Operating on Batteries

Ref	Battery Operation		Battery Status
1		Green	The green indicator indicates that the battery charge is sufficient.
2		Orange	The orange indicator indicates that the surgical table should be connected to mains power to charge the batteries.
3		Red	The red indicator requires that the surgical table is connected to the mains power.

The battery status is displayed on the main hand control when it is turned on. The status can be read when the surgical table is not moving. Different table movements use different amounts of power.

Table 8-5. Main Hand Control in Mains Power Mode

Hand Control Display		Power LED Display			
		Procedure (no movement)		Procedure (movement)	
	 Fixed Green		20–50		10–30
	 Fixed Orange		10–20		0–10
	 Fixed Red		1–10		0
	 Flashing Red		0		0
Measurements made with 298 lbs. (135 kg) patient 164′ (50 m) of corridor on hard floor.					
If the entire bar graphic is blinking this means there is a problem. Recharging the battery is imperative or the surgical table will automatically shut OFF. If the problem persists, contact STERIS.					

To extend the working life of the batteries, the following is recommended:

- Charge batteries consistently every day (also in no use conditions).
- Charge batteries consistently when the indicator on the screen of the main hand control is red.
- Avoid deep discharge to prevent degradation of battery life.
- Carry out a preventive maintenance of batteries yearly.

8.9 Operating the Surgical Table on Mains Power

The power supply allows the user to choose whether to operate the surgical table on battery or mains power.

NOTE: The charger built into the power supply automatically regulates battery charge, so that the surgical table can be left permanently connected to the mains power.

The surgical table has three colored diodes used to monitor the battery status when connected to mains power.

1. If the batteries are charging, the colored diodes light up sequentially orange and green ○●●.
2. If the batteries are charged, the colored diodes light up steadily orange and green ○●●.
3. If the three colored diodes flash when the mains power is connected, this indicates a battery charge error. In this case, please contact the STERIS ●●●.

Each time the surgical table is connected to the mains power, the charger restarts at maximum charge. There is a wait of approximately 2 minutes before the bar graph display is correct on the main hand control.

Table 8-6. Main Hand Control in Mains Power Mode

Hand Control Display		Corresponding Charge Level
	 Green	Greater than 70% and less than 100%.
	 Orange	Greater than 30% and less than 70%.
	 Red	Less than 30%.

Routine Maintenance

9.1 Maintenance Schedule

Recommended Daily Maintenance

Daily maintenance must be performed by qualified personnel, approved by the body in charge of maintenance operations in the surgical facility.

- Check the battery status of the surgical table and the joystick.
- Check that the extensions/accessories are correctly attached (if mounted).
- Check the locking and the stability of the surgical table to the floor.
- Check the operation of each movement with the main hand control.
- Check the correct fixation of the pads on the hook and loop straps.

Preventative Maintenance

Preventive maintenance must be carried out at least once a year by a STERIS technician or another approved technician.

9.2 Cleaning and Disinfection

General Information

Before every cleaning session, turn OFF the surgical table and disconnect it from the charger. Disconnect the main hand control and the joystick and make sure that the socket covers are fitted correctly.

Do not submerge the hand control and the joystick.

Before starting, ensure that the active components of the products used are compatible with the surgical table materials.

Follow the dilution and temperature instructions recommended by the detergent-disinfectant manufacturer.

Personal protective equipment (gloves, goggles) is recommended. After cleaning procedures, ensure no residual water remains near the plug.

Recommended Products

Recommended active ingredients:

NOTE: If unsure of which products to use consult the hygienists in their hospital or supervisory authority.

- Use products designed for above-floor surfaces.
- STERIS recommends the use of cleaning and disinfectant chemicals whose compounds are based on isopropyl alcohol (<45%) or based on a quaternary ammonium.

Products to Avoid

NOTE: If unsure of which products to use consult the hygienists in their hospital or supervisory authority.

Products to avoid:

- Do not use products intended for cleaning floors.
- Hypochlorite solutions may damage the metallic parts. After disinfection, ensure that the pads are thoroughly rinsed and their surfaces dried. Prolonged exposure to hypochlorite solutions may damage the pad material. Prevent hypochlorite solutions and other liquids from coming into contact with the internal parts of the surgical table.
- Do not use acetone products ; these can cause damage to the base and column covers.
- Avoid steam cleaning.

Between Procedures

Clean the main hand control and the joystick.

Cleaning the main hand control and the joystick.

- Wipe with a paper tissue (or non-woven equivalent) impregnated with a detergent-disinfectant solution.
- Leave to dry.

Cleaning the visible surfaces of the surgical table.

- Spray a detergent-disinfectant solution on all the visible surfaces including the pads.
- Clean with a paper tissue.
- Spray the detergent-disinfectant on all the visible surfaces.
- Leave to dry.

End of Day Cleaning

Surgical table pads:

- Remove the surgical table pads
- Spray a detergent-disinfectant directly onto the pads.
- Clean with a paper tissue.
- Spray the detergent-disinfectant on all the visible surfaces.
- Leave to dry.
- If necessary brush the hook and loop straps, the pads and the tabletop with a non-metallic brush (e.g. with a clothes brush).

Cleaning the Surgical Table

NOTE: Side rails are sensitive to corrosion and must stay lubricated. If they need to be cleaned, lubricate them afterwards with a fine oil.

- Raise the surgical table to its maximum height in order to get optimal access to the column.
- Put the tabletop in a horizontal position.
- Clean with a paper tissue.
- Spray the detergent-disinfectant on all the visible surfaces.

  NOTE: If there is a risk of streaming, spray the detergent-disinfectant directly onto the paper tissue.
- Leave to dry.

Cleaning the Castor

- Lock the table so that the castors are no longer touching the floor.
- Spray the detergent-disinfectant on all the visible surfaces.

- Leave to dry.

9.3 Battery Charging

Before Charging the Batteries

NOTE: The charger built into the power supply automatically regulates battery charge, so that the surgical table can be left permanently connected to the mains power.

This surgical table is equipped with INTELLIPOWER® dual power system. The table is powered either by facility power or by internal batteries. If table is to be operated on battery power, note the following and see *Figure 9-1*.

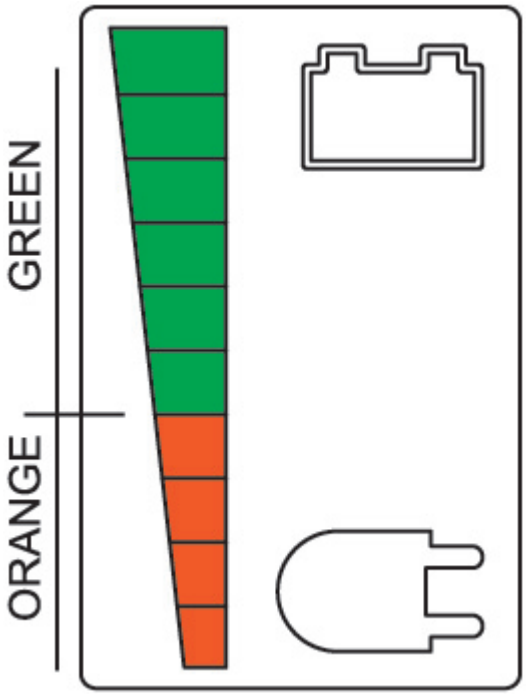

Figure 9-1. INTELLIPOWER Dual Power System LED Display

IMPORTANT: *Batteries are recharged automatically as long as the main power switch is set to ON and the AC supply power is connected to the surgical table. The CHARGE icon indicates AC power, the BATTERY icon indicates battery power, and the diode bar indicates battery charge status.*

- When surgical table is plugged into facility AC and main power switch is ON, the diode bar shows battery charge state. This battery charge state is also indicated by the icon on main hand control.
- When surgical table is on battery power and main hand control is active (ON), the diode bar shows battery charge state. This battery charge state is also indicated by icon on main hand control.

Batteries require recharging on a periodic basis depending on frequency of table usage. Low or discharged battery conditions are indicated by HALF FILLED or EMPTY BATTERY icon on the main hand control and some or all green diode bars on power panel LED display are OFF.

Maximum life expectancy for a battery that has a history of proper care and charging is 4 years. More frequent battery replacement will be required if charging recommendations are not followed. Fully charged batteries enable between 100 and 150 procedures (approximately three weeks) without recharging. Note the charge/discharge icon on the power panel LED display. When two green diode bars on power panel LED display are OFF, batteries are half charged. This level of power enables normal surgical table operation without damaging the batteries. However, when the last green diode bar is OFF, batteries must be recharged without further delay or battery damage occurs. If all diodes are OFF,

batteries are completely drained and the surgical table can only operate on main facility power. See *Table 9-1* for an explanation of the LED display and battery status.

Table 9-1. Battery Status

	≥ 24.2 V		≤ 23.4 V
	≤ 24.2 V		≤ 23.2 V
	≤ 24.0 V		≤ 23.0 V
	≤ 23.8 V		≤ 22.8 V
	≤ 23.6 V		≤ 22.6 V

To extend the working life of the batteries, the following is recommended:

- Charge batteries consistently every day (also in no use conditions).
- Charge batteries consistently when the indicator on the screen of the main hand control is red.
- Avoid deep discharge to prevent degradation of battery life.
- Carry out a preventive maintenance of batteries yearly.

Lead acid batteries last longer if they are not permitted to fully discharge. Therefore, to obtain the longest life and capacity from the surgical table batteries, always connect AC power cord to surgical table base and plug into an appropriate AC receptacle as often as possible, and as long as possible, with the main power switch set to ON. If this is not always possible, recharge batteries at the following times:

- Every 15 days when the surgical table is in normal service; more often if usage demands.
- Whenever HALF FILLED BATTERY icon appears on indicator.
- If the surgical table remains in extended storage for longer than three months; batteries must be charged every three months.

NOTE: If the sealed lead-acid gel electrolyte-type batteries do not charge, check for the following:

1. Battery fuse is blown - replace the fuse. Refer to *Section 7.1, Install and Remove Battery Fuse*.
2. Power cord is defective - replace if necessary.
3. Main power switch is OFF.
4. Charger circuit is not operating - Contact STERIS.

Charging the Battery

WARNING

PERSONAL INJURY AND/OR EQUIPMENT DAMAGE

⚠ Repairs and adjustments to this equipment must be made only by STERIS or STERIS-trained service personnel. Maintenance performed by unqualified personnel or installation of unauthorized parts could cause personal injury, result in improper equipment performance, invalidate the warranty, or result in costly damage. Contact STERIS regarding service options.

⚠ Route the power cord to the receptacle to minimize being tripped over by personnel in the area.

Recharge batteries as follows:

1. Connect power cord to mains connection on the surgical table base and plug into an appropriate facility AC receptacle.
2. Turn main power switch to ON.
3. Allow approximately 12 hours for full battery charge.
4. Verify FILLED BATTERY icon on main hand control.
5. Disconnect AC power.

Troubleshooting

10.1 1 - Hand Control Error - ONE_KEY_ONLY

Condition

Hand control displays ONE_KEY_ONLY error.

General Troubleshooting	Additional Information
Two different buttons were pressed simultaneously on the hand control.	1. Allow the error to clear. 2. Press buttons one at a time. 3. If the issue persists, continue with the next troubleshooting step.
Hand control is damaged.	1. Replace hand control. 2. If the issue persists, contact STERIS.

10.2 2 - Hand Control Error - DUAL_COMMAND

Condition

Hand control displays DUAL_COMMAND error.

General Troubleshooting	Additional Information
Buttons on two different devices were pressed simultaneously.	1. Allow the error to clear. 2. Make sure correct device is being used. 3. If the issue persists, contact STERIS.

10.3 3 - Hand Control Error - INT_TCDE

Condition

Hand control displays INT_TCDE.

General Troubleshooting	Additional Information
The surgical table is operating via remote when in wired mode.	1. This is normal, no action is required.

10.4 4 - Hand Control Error - INT_PEDALE

Condition

Hand control displays INT_PEDALE error.

General Troubleshooting	Additional Information
The surgical table is operating via foot control.	1. This is normal, no action is required.

10.5 5 - Hand Control Error - INT_ESERVE

Condition

Hand control displays INT_ESERVE error.

General Troubleshooting	Additional Information
The surgical table is operating via EServe.	1. This is normal, no action is required.

10.6 6 - Hand Control Error - INT_BT

Condition

Hand control displays INT_BT error.

General Troubleshooting	Additional Information
The surgical table is operating via Bluetooth.	1. This is normal, no action is required.

10.7 7 - Hand Control Error - SLIDE_BLOCKED

Condition

Hand control displays SLIDE_BLOCKED error.

General Troubleshooting	Additional Information
When slide command is inputted the main control board does not detect a change in value.	1. Allow the error to clear. 2. If the issue persist, contact STERIS.

10.8 8 - Hand Control Error - REV_ORIENT

Condition

Hand control displays REV_ORIENT error.

General Troubleshooting	Additional Information
Change of direction command is inputted from the hand control or E-Serve.	1. This is normal, no action is required.

10.9 9 - Hand Control Error - PLUG_MAINS

Condition

Hand control displays PLUG_MAINS error.

General Troubleshooting	Additional Information
The batteries are in very deep discharge, voltage between 19–22 V and urgently need charged.	1. Plug the table into mains power and allow the batteries to charge. 2. If the issue persists, proceed with next troubleshooting step.
The mains plug is damaged or faulty.	1. Replace the mains plug. 2. If the mains plug is OK and the issue persists, contact STERIS.

10.10 10 - Hand Control Error - LOCK_AGAIN

Condition

Hand control displays LOCK_AGAIN error.

General Troubleshooting	Additional Information
Surgical table did not lock, is locked but the information did not arrive or arrived but is not considered.	1. Attempt to lock the table again. 2. If the issue persists, contact STERIS.

10.11 11 - Hand Control Error - WRONG_USE

Condition

Hand control displays WRONG_USE error.

General Troubleshooting	Additional Information
A button on the hand control or joystick has been pressed for longer than 1:00.	1. Release the button. 2. If the issue persists or no button is being pressed, contact STERIS.

10.12 12 - Hand Control Error - TILT_SENS_DEF

Condition

Hand control displays TILT_SENS_DEF error.

General Troubleshooting	Additional Information
Internal components require inspection.	1. Contact STERIS.

10.13 14 - Hand Control Error - BACK_SENS_DEF

Condition

Hand control displays BACK_SENS_DEF error.

General Troubleshooting	Additional Information
Internal components require inspection.	1. Contact STERIS.

10.14 13 - Hand Control Error - TREND_SENS_DEF

Condition

Hand control displays TREND_SENS_DEF error.

General Troubleshooting	Additional Information
Internal components require inspection.	1. Contact STERIS.

10.15 15 - Hand Control Error - LEGL_SENS_DEF

Condition

Hand control displays LEGL_SENS_DEF error.

General Troubleshooting	Additional Information
Internal components require inspection.	1. Contact STERIS.

10.16 16 - Hand Control Error - LEGR_SENS_DEF

Condition

Hand control displays LEGR_SENS_DEF error.

General Troubleshooting	Additional Information
Internal components require inspection.	1. Contact STERIS.

10.17 17 - Hand Control Error - HEIGH_SENS_DEF

Condition

Hand control displays HEIGH_SENS_DEF error.

General Troubleshooting	Additional Information
Internal components require inspection.	1. Contact STERIS.

10.18 18 - Hand Control Error - SLIDE_SENS_DEF

Condition

Hand control displays SLIDE_SENS_DEF error.

General Troubleshooting	Additional Information
Internal components require inspection.	1. Contact STERIS.

10.19 20 - Hand Control Error - PARAM_FAIL

Condition

Hand control displays PARAM_FAIL error.

General Troubleshooting	Additional Information
Internal components require inspection.	1. Contact STERIS.

10.20 21 - Hand Control Error - BATT_FUSE

Condition

Hand control displays BATT_FUSE error.

General Troubleshooting	Additional Information
Internal components require inspection.	1. Contact STERIS.

10.21 22 - Hand Control Error - BATT_DEF

Condition

Hand control displays BATT_DEF error.

General Troubleshooting	Additional Information
Internal components require inspection.	1. Contact STERIS.

10.22 23 - Hand Control Error - CHARGER_DEF

Condition

Hand control displays CHARGER_DEF error.

General Troubleshooting	Additional Information
Internal components require inspection.	1. Contact STERIS.

10.23 24 - Hand Control Error - BATT_MODE

Condition

Hand control displays BATT_MODE error.

General Troubleshooting	Additional Information
Internal components require inspection.	1. Contact STERIS.

10.24 25 - Hand Control Error - PUMP_DEF

Condition

Hand control displays PUMP_DEF error.

General Troubleshooting	Additional Information
Internal components require inspection.	1. Contact STERIS.

10.25 26 - Hand Control Error - VALVE_DEF

Condition

Hand control displays VALVE_DEF error.

General Troubleshooting	Additional Information
Internal components require inspection.	1. Contact STERIS.

10.26 27 - Hand Control Error - MOTOR_DEF

Condition

Hand control displays MOTOR_DEF error.

General Troubleshooting	Additional Information
Internal components require inspection.	1. Contact STERIS.

10.27 28 - Hand Control Error - MOTOR_FAIL

Condition

Hand control displays MOTOR_FAIL error.

General Troubleshooting	Additional Information
Internal components require inspection.	1. Contact STERIS.

10.28 31 - Hand Control Error - BAD_VERSION

Condition

Hand control displays BAD_VERSION error.

General Troubleshooting	Additional Information
Internal components require inspection.	1. Contact STERIS.

10.29 32 - Hand Control Error - PUMP_FAIL

Condition

Hand control displays PUMP_FAIL error.

General Troubleshooting	Additional Information
Internal components require inspection.	1. Contact STERIS.

10.30 33 - Hand Control Error - VOLTAGE_PEAK

Condition

Hand control displays VOLTAGE_PEAK error.

General Troubleshooting	Additional Information
Internal components require inspection.	1. Contact STERIS.

10.31 34 - Hand Control Error - VALVE_FAIL

Condition

Hand control displays VALVE_FAIL error.

General Troubleshooting	Additional Information
Internal components require inspection.	1. Contact STERIS.

10.32 35 - Hand Control Error - ALS_DEF

Condition

Hand control displays ALS_DEF error.

General Troubleshooting	Additional Information
The surgical table has been moved to the maximum/minimum position allowed.	1. This is normal, no action is necessary.

10.33 36 - Hand Control Error - START_UP

Condition

Hand control displays START_UP error.

General Troubleshooting	Additional Information
The surgical table has been turned ON.	1. This is normal, no action is necessary.

10.34 37 - Hand Control Error - AUTOOFF

Condition

Hand control displays AUTOOFF error.

General Troubleshooting	Additional Information
The surgical table has automatically turned OFF after a pre-determined amount of time. The default auto off time is 3:00.	1. This is normal, no action is necessary.

10.35 38 - Hand Control Error - CURRENT_WHEEL_DEF

Condition

Hand control displays CURRENT_WHEEL_DEF error.

General Troubleshooting	Additional Information
Internal components require inspection.	1. Contact STERIS.

10.36 39 - Hand Control Error - FLAG_WHEEL_DEF

Condition

Hand control displays FLAG_WHEEL_DEF error.

General Troubleshooting	Additional Information
Internal components require inspection.	1. Contact STERIS.

10.37 40 - Hand Control Error - BAT_VERT2ORANGE

Condition

Hand control displays BAT_VERT2ORANGE error.

General Troubleshooting	Additional Information
The batteries are measured between 23.7-24.3 V.	1. This is an indicator that the batteries will soon need to be charged. 2. It is OK to continue operating the surgical table without connecting to mains power at this time. 3. Plug the table into mains power to charge the batteries. 4. If the issue persists, contact STERIS.

10.38 41 - Hand Control Error - BAT_ORANGE2ROUGE

Condition

Hand control displays BAT_ORANGE2ROUGE error.

General Troubleshooting	Additional Information
The batteries are measured at less than 23.7 V.	1. This is the second level alert to indicate that the batteries need to be charged. 2. Immediately plug the table into mains power to charge and avoid damage to the batteries. 3. If the issue persists, contact STERIS.

10.39 42 - Hand Control Error - RTC_DEF

Condition

Hand control displays RTC_DEF error.

General Troubleshooting	Additional Information
Internal components require inspection.	1. Contact STERIS.

10.40 43 - Hand Control Error - ACC_MOTOR_DEF

Condition

Hand control displays ACC_MOTOR_DEF error.

General Troubleshooting	Additional Information
Internal components require inspection.	1. Contact STERIS.

10.41 44 - Hand Control Error - ACC_MOTOR_FAIL

Condition

Hand control displays ACC_MOTOR_FAIL error.

General Troubleshooting	Additional Information
Internal components require inspection.	1. Contact STERIS.

10.42 45 - Hand Control Error - OFF_EXT

Condition

Hand control displays OFF_EXT error.

General Troubleshooting	Additional Information
The surgical table has been turned OFF by an external source, i.e., EServe or a Bluetooth device.	1. This is normal, no action is necessary.

10.43 46 - Hand Control Error - AUTOOFF_CHARGE_END

Condition

Hand control displays AUTOOFF_CHARGE_END error.

General Troubleshooting	Additional Information
The hand control has fully charged and the surgical table turns OFF.	1. This is normal, no action is necessary.

10.44 49 - Hand Control Error - PVALVE_DEF

Condition

Hand control displays PVALVE_DEF error.

General Troubleshooting	Additional Information
Internal components require inspection.	1. Contact STERIS.

10.45 50 - Hand Control Error - LOW_BATT_USE

Condition

Hand control displays LOW_BATT_USE error.

General Troubleshooting	Additional Information
Batteries are dramatically low have or gone below 22 V and need charged immediately. Batteries will not regain capacity.	1. Plug the table into mains power and allow the batteries to charge. 2. If the issue persists, proceed with next troubleshooting step.

10.46 51 - Hand Control Error - FREIN_FLOATING_FAIL

Condition

Hand control displays FREIN_FLOATING_FAIL error.

General Troubleshooting	Additional Information
Internal components require inspection.	1. Contact STERIS.

10.47 52- Hand Control Error - SLIDE_LONG_SENS_DEF

Condition

Hand control displays SLIDE_LAT_SENS_DEF error.

General Troubleshooting	Additional Information
Internal components require inspection.	1. Contact STERIS.

10.48 53 - Hand Control Error – SLIDE_LAT_SENS_DEF

Condition

Hand control displays SLIDE_LAT_SENS_DEF error.

General Troubleshooting	Additional Information
Internal components require inspection.	1. Contact STERIS.

10.49 54 - Hand Control Error – INT_JOYSTICK

Condition

Hand control displays INT_JOYSTICK error.

General Troubleshooting	Additional Information
User attempts to move surgical table via remote control when in wired mode.	1. This is normal, no action is necessary.

10.50 55 - Hand Control Error – DURRE_FLOATING_DEF

Condition

Hand control displays DURRE_FLOATING_DEF error.

General Troubleshooting	Additional Information
Internal components require inspection.	1. Contact STERIS.

10.51 Surgical Table will not Turn ON

Condition

When attempting to turn the surgical table ON, the table fails to turn ON.

General Troubleshooting	Additional Information
The surgical table batteries are completely discharged.	1. Plug the surgical table into mains power. 2. If the table is plugged into mains power or the issue persists, continue with the next troubleshooting step.
The hand control cable is damaged or faulty.	1. Replace the hand control cable. 2. If the hand control cable is OK or the issue persists, continue with the next troubleshooting step.
The hand control is faulty,	1. Replace the hand control. 2. If the hand control is OK or the issue persists, continue with the next troubleshooting step.
The fuses are blown.	1. Connect the table to mains power. 2. Contact STERIS.

10.52 No Surgical Table Movement

Condition

The surgical table does not move when input from a device is performed.

General Troubleshooting	Additional Information
The surgical table batteries are completely discharged.	1. Plug the surgical table into mains power. 2. If the table is plugged into mains power or the issue persists, continue with the next troubleshooting step.
The hand control cable is damaged or faulty.	1. Replace the hand control cable. 2. If the hand control cable is OK or the issue persists, continue with the next troubleshooting step.
The hand control is faulty,	1. Replace the hand control. 2. If the hand control is OK or the issue persists, contact STERIS.

10.53 Surgical Table will not Go on Caster Wheels

Condition

When command to go on caster wheels is inputted the surgical table does not respond.

General Troubleshooting	Additional Information
The tabletop is incorrectly positioned.	1. Slide the surgical table to position "0". 2. If the issue persists, contact STERIS.

10.54 Surgical Table Remains in Battery Mode when Plugged into Mains Power

Condition

When the surgical table is connected to mains power it remains in battery mode.

General Troubleshooting	Additional Information
The mains power plug is improperly connected.	1. Connect the mains power cord correctly. 2. If the mains power cord is plugged in properly or the issue persist, continue with the next troubleshooting step.
The mains power cord is damaged or faulty.	1. Replace the mains power cord. 2. If the mains power cord is OK or the issue persist, contact STERIS.

10.55 Extensions will not Lock or have Excessive Play

Condition

An attached extensions has excessive play or is not locked into place.

General Troubleshooting	Additional Information
The extension is not correctly attached.	1. Correctly attach the extension. 2. If the issue persists, contact STERIS.

10.56 Float Function not Working

Condition

The floating function of the surgical table is not working.

General Troubleshooting	Additional Information
Internal components require inspection.	1. Contact STERIS.

10.57 Hand Control not Displaying Full Charge

Condition

The hand control is not displaying the full charge bar (all green bars) despite being fully charged.

General Troubleshooting	Additional Information
The surgical table was turned OFF during charging and the hand control did not register the boost phase.	1. If the battery is fully charged, leave the surgical table ON during the next charge.

10.58 Position on Hand Control Does not Match Surgical Table Position

Condition

The position of the surgical table does not match the display on the hand control.

General Troubleshooting	Additional Information
Faulty hand control communication with the main board.	1. Replace the hand control and/or the hand control cable. 2. If the hand control is OK or the issue persists, contact STERIS.

10.59 Tabletop Red on Hand Control when Tilt is Selected

Condition

The tabletop image on the hand control appears ready and the tabletop will not tilt when activated.

General Troubleshooting	Additional Information
The tabletop is not centered on the column.	1. Center to the tabletop and attempt to tilt the tabletop again. 2. If the issue persists, contact STERIS.

10.60 Joystick not Connecting via Bluetooth

Condition

Bluetooth communication is not made between joystick and main board through the override control.

General Troubleshooting	Additional Information
Joystick is not paired.	1. Connect the joystick to the connection on the override control. 2. Perform a movement with the joystick. 3. Disconnect the joystick. 4. Ensure joystick is now operating via bluetooth. 5. If the issue persists, continue with the next troubleshooting step.

10.61 Recurring Premature Battery Failure

Condition

Surgical table batteries are draining prematurely.

General Troubleshooting	Additional Information
Internal components require inspection.	1. Contact STERIS.

Appendix

11.1 Spare Parts

The following is a list of spare parts available for the surgical table.

Description	Reference	Description	Reference
Seat pad 2”	S00XW	Joystick	TAB800JS
Seat pad 3”	S20CV3	Velcro, 39” (1 m)	V6540050-07
Main hand control	V5428059-97	Batteries, set of 2	V3422125-55
Main hand control cable	V5425012-08	Castor	V6060064-08

11.2 Accessories

Contact STERIS for more information on the available accessories for this surgical table.

Head End Accessories

Skull Tip Head Section	Horseshoe Head Section

Foot End Accessories

BF859/BF867 Leg Sections	Hand 10C Motorized Control Handles
HEAD 05D/HEAD 05BE Simple Articulating Headrest	TAB 800KT/TAB 80KTL Catheter Extensions
HEAD 02 Single Articulating Headrest	

Slide Rail Accessories

10–398 Radial AV Fistula Board	TAB 841 Rotary Self-Locking Clamp
BF431 Arm Rest	TAB 830/TAB 830H Accessory Rails
10–531 Retractable Rails (Pair)	

EMC Compliance Technical Data

AC Mains Power

The STERIS Corporation CMAX XRAY-Series General Surgical Table requires special precautions regarding EMC and needs to be installed and put into service according to the EMC information provided in these accompanying documents.

WARNING

⚠ Portable RF communications equipment (including peripherals such as antenna cables and external antennas) should be used no closer than 30 cm (12 inches) to any part of the STERIS Corporation CMAX XRAY-Series General Surgical Table, including cables specified by the manufacturer. Otherwise, degradation of the performance of this equipment could result.

⚠ A risk of increased emissions or decreased immunity may result if any additional cables are attached.

⚠ This device has not been tested for compatibility with all other potential RF Emitters such as X-ray, Metal Detectors, Electrosurgical Equipment, Diathermy Equipment, 5G Cellular, NFC, WPT, or Electronic Article Surveillance (EAS) devices. Caution should be used if such emitters are present within the use environment.

⚠ Use of this equipment adjacent to or stacked with other equipment should be avoided because it could result in improper operation. If such use is necessary, this equipment and the other equipment should be observed to verify that they are operating normally.

⚠ Use of accessories, transducers, and cables other than those specified or provided by the manufacturer of this equipment could result in increased electromagnetic emissions or decreased electromagnetic immunity of this equipment and result in improper operation.

<table>
<tr><th colspan="3">Guidance and manufacturer's declaration – electromagnetic emissions</th></tr>
<tr><td colspan="3">The STERIS Corporation CMAX XRAY-Series General Surgical Table is intended for use in the electromagnetic environment specified below. The Customer or the user of the STERIS Corporation CMAX XRAY-Series General Surgical Table should assure that it is used in such an environment.</td></tr>
<tr><th>Emissions test</th><th>Compliance</th><th>Electromagnetic Environment Guidance</th></tr>
<tr><td>RF emissions
CISPR 11</td><td>Group 1</td><td>The STERIS Corporation CMAX XRAY-Series General Surgical Table uses RF energy only for its internal function. Therefore, its RF emissions are very low and are not likely to cause any interference in nearby electronic equipment.</td></tr>
<tr><td>RF emissions
CISPR 11</td><td>Class A</td><td rowspan="3">The STERIS Corporation CMAX XRAY-Series General Surgical Table is suitable for use in all establishments other than domestic, and may be used in domestic establishments and those directly connected to the public low-voltage power supply network that supplies buildings used for domestic purposes, provided the following warning is heeded:

WARNING

⚠ This equipment/system is intended for use by healthcare professionals only. This equipment/system may cause radio interference or may disrupt the operation of near-by equipment. It may be necessary to take mitigation measures, such as re-orienting or relocating the STERIS Corporation CMAX XRAY-Series General Surgical Table or shielding the location.</td></tr>
<tr><td>Harmonic emissions
IEC 61000-3-2</td><td>Class A</td></tr>
<tr><td>Voltage fluctuations/flicker emissions
IEC 61000-3-3</td><td>Complies</td></tr>
<tr><td colspan="3">The emissions characteristics of this equipment make it suitable for use in industrial areas and hospitals (CISPR 11 Class A). If it is used in a residential environment (for which CISPR 11 Class B is required), this equipment might not offer adequate protection to radio frequency communication services. The Customer might need to take mitigation measures, such as relocating or re-orientating the equipment.</td></tr>
</table>

Guidance and manufacturer's declaration – electromagnetic immunity			
The STERIS Corporation CMAX XRAY-Series General Surgical Table is intended for use in the electromagnetic environment specified below. The Customer or the user of the STERIS Corporation CMAX XRAY-Series General Surgical Table should assure that it is used in such an environment.			
Immunity test	**IEC 60601 Test Level**	**Compliance Level**	**Electromagnetic Environment Guidance**
Electrostatic discharge (ESD) IEC 61000-4-2	±8 kV contact ±15 kV air	±8 kV contact ±15 kV air	Floors should be wood, concrete or ceramic tile. If floors are covered with synthetic material, the relative humidity should be at least 30%.
Electrical fast transient/burst IEC 61000-4-4	±2 kV for power supply lines	±2 kV for power supply lines	Mains power quality should be that of a typical commercial or hospital environment.
Surge IEC 61000-4-5	+1kV line(s) to line +2kV line(s) to earth	+1kV line(s) to line +2kV line(s) to earth	Mains power quality should be that of a typical commercial or hospital environment.
Voltage dips, short interruptions and voltage variations on power supply input lines IEC 61000-4-11	0 % UT; 0,5 cycl at 0°, 45°, 90°, 135°, 180°, 225°, 270° and 315° 0 % UT; 1 cycle and 70 % UT; 25/30 cycles Single phase: at 0° 0 % UT; 250/300 cycle	0 % UT; 0,5 cycl at 0°, 45°, 90°, 135°, 180°, 225°, 270° and 315° 0 % UT; 1 cycle and 70 % UT; 25/30 cycles Single phase: at 0° 0 % UT; 250/300 cycle	Mains power quality should be that of a typical commercial or hospital environment. If the user of the STERIS Corporation CMAX XRAY-Series General Surgical Table requires continued operation during power mains interruptions, it is recommended that the STERIS Corporation CMAX XRAY-Series General Surgical Table be powered from an uninterruptible power supply or a battery.
Power frequency (50/60 Hz) magnetic field IEC 61000-4-8	30 A/m	30 A/m	Power frequency magnetic fields should be at levels characteristic of a typical location in a typical commercial or hospital environment.
NOTE: U_T is the AC mains voltage prior to application of the test level.			

Guidance and manufacturer's declaration – electromagnetic immunity			
The STERIS Corporation CMAX XRAY-Series General Surgical Table is intended for use in the electromagnetic environment specified below. The Customer or the user of the STERIS Corporation CMAX XRAY-Series General Surgical Table should ensure that it is used in such an environment.			
Immunity test	**IEC 60601 Test Level**	**Compliance Level**	**Electromagnetic Environment Guidance**
Conducted RF IEC 61000-4-6	3 Vrms 0,15 MHz–80 MHz 6 Vrms in ISM bands between 0,15 MHz and 80 MHz 80 % AM at 1 kHz 3 V/m	3 Vrms 0,15 MHz–80 MHz 6 Vrms in ISM bands between 0,15 MHz and 80 MHz 80 % AM at 1 kHz 3 V/m	Portable and mobile RF communications equipment should be used no closer to any part of the STERIS Corporation CMAX XRAY-Series General Surgical Table, including cables, than the recommended separation distance calculated from the equation applicable to the frequency of the transmitter. Recommended separation distance: d = [3.5/10] √P 80 MHz to 800 MHz d = [7/10] √P 800 MHz to 2.7 GHz where P is the maximum output power rating of the transmitter in watts (W) according to the transmitter manufacturer and d is the recommended separation distance in meters (m). Field strengths from fixed RF transmitters, as determined by an electromagnetic site survey, a should be less than the compliance level in each frequency range. b Interference may occur in the vicinity of equipment marked with the following symbol: 
Radiated RF IEC 61000-4-3	80 MHz to 2.7 GHz	80 MHz to 2.7 GHz	
NOTE: At 80 MHz and 800 MHz, the higher frequency range applies. **NOTE:** These guidelines may not apply in all situations. Electromagnetic propagation is affected by absorption and reflection from structures, objects and people.			

Guidance and manufacturer's declaration – electromagnetic immunity			
The STERIS Corporation CMAX XRAY-Series General Surgical Table is intended for use in the electromagnetic environment specified below. The Customer or the user of the STERIS Corporation CMAX XRAY-Series General Surgical Table should ensure that it is used in such an environment.			
Immunity test	**IEC 60601 Test Level**	**Compliance Level**	**Electromagnetic Environment Guidance**
Field strengths from fixed transmitters, such as base stations for radio (cellular/cordless) telephones and land mobile radios, amateur radio, AM and FM radio broadcast and TV broadcast cannot be predicted theoretically with accuracy. To assess the electromagnetic environment due to fixed RF transmitters, an electromagnetic site survey should be considered. If the measured field strength in the location in which the STERIS Corporation CMAX XRAY-Series General Surgical Table is used exceeds the applicable RF compliance level above, the STERIS Corporation CMAX XRAY-Series General Surgical Table should be observed to verify normal operation. If abnormal performance is observed, additional measures may be necessary, such as re-orienting or relocating the STERIS Corporation CMAX XRAY-Series General Surgical Table			

Guidance and manufacturer's declaration – electromagnetic immunity							
The STERIS Corporation CMAX XRAY-Series General Surgical Table is intended for use in the electromagnetic environment specified below. The Customer or the user of the STERIS Corporation CMAX XRAY-Series General Surgical Table should ensure that it is used in such an environment							
Immunity test	**IEC 60601 Test Level**			**Compliance Level**			**Electromagnetic Environment Guidance**
IMMUNITY to proximity fields from RF wireless communica-tions equipment	MHz	Modula-tion	Field Streng-th	MHz	Modula-tion	Field Streng-th	Portable and mobile RF communications equipment should be used no closer to any part of the STERIS Corporation CMAX XRAY-Series General Surgical Table, including cables, than the recommended separation distance calculated from the equation applicable to the frequency of the transmitter. Recommended separation distance: E = [6/d] √P d = [6/E] √P where P is the maximum output power rating of the transmitter in watts (W) according to the transmitter manufacturer, d is the recommended separation distance in meters (m), and E is the field strength in V/m. Field strengths from fixed RF transmitters, as determined by an electromagnetic site survey, should be less than the compliance level in each frequency range. Interference may occur in the vicinity of
	385	18 Hz	27 V/m	385	18 Hz	27 V/m	
	450	18 Hz	28 V/m	450	18 Hz	28 V/m	
	710	217 Hz	9 V/m	710	217 Hz	9 V/m	
	745	217 Hz	9 V/m	745	217 Hz	9 V/m	
	780	217 Hz	9 V/m	780	217 Hz	9 V/m	
	810	18 Hz	28 V/m	810	18 Hz	28 V/m	
	870	18 Hz	28 V/m	870	18 Hz	28 V/m	
	930	18 Hz	28 V/m	930	18 Hz	28 V/m	
	1720	217 Hz	28 V/m	1720	217 Hz	28 V/m	
	1845	217 Hz	28 V/m	1845	217 Hz	28 V/m	
	1970	217 Hz	28 V/m	1970	217 Hz	28 V/m	
	2450	217 Hz	28 V/m	2450	217 Hz	28 V/m	
	5240	217 Hz	9 V/m	5240	217 Hz	9 V/m	
	5500	217 Hz	9 V/m	5500	217 Hz	9 V/m	
	5785	217 Hz	9 V/m	5785	217 Hz	9 V/m	
IMMUNITY to proximity magnetic fields IEC 61000-4-39	0.13-42	2.1 kHz	65.5 A/m	0.13-42	2.1 kHz	65.5 A/m	
	13.5-6	50 kHz	7.5 A/m	13.5-6	50 kHz	7.5 A/m	
	0.03-0	CW	8 A/m	0.03-0	CW	8 A/m	

Guidance and manufacturer's declaration – electromagnetic immunity							
The STERIS Corporation CMAX XRAY-Series General Surgical Table is intended for use in the electromagnetic environment specified below. The Customer or the user of the STERIS Corporation CMAX XRAY-Series General Surgical Table should ensure that it is used in such an environment							
Immunity test	**IEC 60601 Test Level**			**Compliance Level**			**Electromagnetic Environment Guidance**
							equipment marked with the following symbol: 
NOTE: These guidelines may not apply in all situations. Electromagnetic propagation is affected by absorption and reflection from structures, objects and people.							

Recommended separation distances between portable and mobile RF communications equipment as well as RF wireless communications equipment and the STERIS Corporation CMAX XRAY-Series General Surgical Table.

The STERIS Corporation CMAX XRAY-Series General Surgical Table is intended for use in an electromagnetic environment in which radiated RF disturbances are controlled. The Customer or the user of the STERIS Corporation CMAX XRAY-Series General Surgical Table can help prevent electromagnetic interference by maintaining a minimum distance between portable and mobile RF communications equipment (transmitters) and the STERIS Corporation CMAX XRAY-Series General Surgical Table as recommended below, according to the maximum output power of the communications equipment.

Rated maximum output power of transmitter (W)	Separation distance according to frequency of transmitter (m)			
	80 to 800 MHz $d = [3.5/3] \sqrt{P}$	800 MHz to 2.7 GHz $d = [7/3] \sqrt{P}$	710, 745, 780, 5240, 5500, 5785 MHz $d = [6/9] \sqrt{P}$	385, 450,810, 870, 930, 1720, 1845, 1970, 2450 MHz $d = [6/28] \sqrt{P}$
0.01	0.117	0.233	0.067	0.021
0.1	0.369	0.738	0.211	0.070
1	1.170	2.333	0.667	0.214
10	3.689	7.379	2.108	0.700

Recommended separation distances between portable and mobile RF communications equipment as well as RF wireless communications equipment and the STERIS Corporation CMAX XRAY-Series General Surgical Table.				
The STERIS Corporation CMAX XRAY-Series General Surgical Table is intended for use in an electromagnetic environment in which radiated RF disturbances are controlled. The Customer or the user of the STERIS Corporation CMAX XRAY-Series General Surgical Table can help prevent electromagnetic interference by maintaining a minimum distance between portable and mobile RF communications equipment (transmitters) and the STERIS Corporation CMAX XRAY-Series General Surgical Table as recommended below, according to the maximum output power of the communications equipment.				
100	11.66	23.33	6.670	2.143
For transmitters rated at a maximum output power not listed above, the recommended separation distance d in meters (m) can be estimated using the equation applicable to the frequency of the transmitter, where P is the maximum output power rating of the transmitter in watts (W) according to the transmitter manufacturer. **NOTE:** At 80 MHz and 800 MHz, the separation distance for the higher frequency range applies. **NOTE:** These guidelines may not apply in all situations. Electromagnetic propagation is affected by absorption and reflection from structures, objects and people.				

Battery Power

The STERIS Corporation CMAX XRAY-Series General Surgical Table requires special precautions regarding EMC and needs to be installed and put into service according to the EMC information provided in these accompanying documents.

WARNING

⚠ Portable RF communications equipment (including peripherals such as antenna cables and external antennas) should be used no closer than 30 cm (12 inches) to any part of the STERIS Corporation CMAX XRAY-Series General Surgical Table, including cables specified by the manufacturer. Otherwise, degradation of the performance of this equipment could result.

⚠ A risk of increased emissions or decreased immunity may result if any additional cables are attached.

⚠ This device has not been tested for compatibility with all other potential RF Emitters such as X-ray, Metal Detectors, Electrosurgical Equipment, Diathermy Equipment, 5G Cellular, NFC, WPT, or Electronic Article Surveillance (EAS) devices. Caution should be used if such emitters are present within the use environment.

⚠ Use of this equipment adjacent to or stacked with other equipment should be avoided because it could result in improper operation. If such use is necessary, this equipment and the other equipment should be observed to verify that they are operating normally.

⚠ Use of accessories, transducers, and cables other than those specified or provided by the manufacturer of this equipment could result in increased electromagnetic emissions or decreased electromagnetic immunity of this equipment and result in improper operation.

Guidance and manufacturer's declaration – electromagnetic emissions		
The STERIS Corporation CMAX XRAY-Series General Surgical Table is intended for use in the electromagnetic environment specified below. The Customer or the user of the STERIS Corporation CMAX XRAY-Series General Surgical Table should assure that it is used in such an environment.		
Emissions test	**Compliance**	**Electromagnetic Environment Guidance**
RF emissions CISPR 11	Group 1	The STERIS Corporation CMAX XRAY-Series General Surgical Table uses RF energy only for its internal function. Therefore, its RF emissions are very low and are not likely to cause any interference in nearby electronic equipment.
RF emissions CISPR 11	Class A	The STERIS Corporation CMAX XRAY-Series General Surgical Table is suitable for use in all establishments other than domestic, and may be used in domestic establishments and those directly connected to the public low-voltage power supply network that supplies buildings used for domestic purposes, provided the following warning is heeded: **WARNING** ⚠ This equipment/system is intended for use by healthcare professionals only. This equipment/system may cause radio interference or may disrupt the operation of near-by equipment. It may be necessary to take mitigation measures, such as re-orienting or relocating the STERIS Corporation CMAX XRAY-Series General Surgical Table or shielding the location.

Guidance and manufacturer's declaration – electromagnetic immunity			
The STERIS Corporation CMAX XRAY-Series General Surgical Table is intended for use in the electromagnetic environment specified below. The Customer or the user of the STERIS Corporation CMAX XRAY-Series General Surgical Table should assure that it is used in such an environment.			
Immunity test	**IEC 60601 Test Level**	**Compliance Level**	**Electromagnetic Environment Guidance**
Electrostatic discharge (ESD) IEC 61000-4-2	±8 kV contact ±15 kV air	±8 kV contact ±15 kV air	Floors should be wood, concrete or ceramic tile. If floors are covered with synthetic material, the relative humidity should be at least 30%.
Power frequency (50/60 Hz) magnetic field IEC 61000-4-8	30 A/m	30 A/m	Power frequency magnetic fields should be at levels characteristic of a typical location in a typical commercial or hospital environment.
NOTE: U_T is the AC mains voltage prior to application of the test level.			

Guidance and manufacturer's declaration – electromagnetic immunity			
The STERIS Corporation CMAX XRAY-Series General Surgical Table is intended for use in the electromagnetic environment specified below. The Customer or the user of the STERIS Corporation CMAX XRAY-Series General Surgical Table should ensure that it is used in such an environment.			
Immunity test	**IEC 60601 Test Level**	**Compliance Level**	**Electromagnetic Environment Guidance**
Conducted RF IEC 61000-4-6	3 Vrms 0,15 MHz–80 MHz 6 Vrms in ISM bands between 0,15 MHz and 80 MHz 80 % AM at 1 kHz 3 V/m	3 Vrms 0,15 MHz–80 MHz 6 Vrms in ISM bands between 0,15 MHz and 80 MHz 80 % AM at 1 kHz 3 V/m	Portable and mobile RF communications equipment should be used no closer to any part of the STERIS Corporation CMAX XRAY-Series General Surgical Table, including cables, than the recommended separation distance calculated from the equation applicable to the frequency of the transmitter. Recommended separation distance: d = [3.5/10] √P 80 MHz to 800 MHz d = [7/10] √P 800 MHz to 2.7 GHz where P is the maximum output power rating of the transmitter in watts (W) according to the transmitter manufacturer and d is the recommended separation distance in meters (m). Field strengths from fixed RF transmitters, as determined by an electromagnetic site survey, a should be less than the compliance level in each frequency range. b Interference may occur in the vicinity of equipment marked with the following symbol: 
Radiated RF IEC 61000-4-3	80 MHz to 2.7 GHz	80 MHz to 2.7 GHz	
NOTE: At 80 MHz and 800 MHz, the higher frequency range applies. **NOTE:** These guidelines may not apply in all situations. Electromagnetic propagation is affected by absorption and reflection from structures, objects and people.			

Guidance and manufacturer's declaration – electromagnetic immunity			
The STERIS Corporation CMAX XRAY-Series General Surgical Table is intended for use in the electromagnetic environment specified below. The Customer or the user of the STERIS Corporation CMAX XRAY-Series General Surgical Table should ensure that it is used in such an environment.			
Immunity test	**IEC 60601 Test Level**	**Compliance Level**	**Electromagnetic Environment Guidance**
Field strengths from fixed transmitters, such as base stations for radio (cellular/cordless) telephones and land mobile radios, amateur radio, AM and FM radio broadcast and TV broadcast cannot be predicted theoretically with accuracy. To assess the electromagnetic environment due to fixed RF transmitters, an electromagnetic site survey should be considered. If the measured field strength in the location in which the STERIS Corporation CMAX XRAY-Series General Surgical Table is used exceeds the applicable RF compliance level above, the STERIS Corporation CMAX XRAY-Series General Surgical Table should be observed to verify normal operation. If abnormal performance is observed, additional measures may be necessary, such as re-orienting or relocating the STERIS Corporation CMAX XRAY-Series General Surgical Table			

Guidance and manufacturer's declaration – electromagnetic immunity							
The STERIS Corporation CMAX XRAY-Series General Surgical Table is intended for use in the electromagnetic environment specified below. The Customer or the user of the STERIS Corporation CMAX XRAY-Series General Surgical Table should ensure that it is used in such an environment							
Immunity test	**IEC 60601 Test Level**			**Compliance Level**			**Electromagnetic Environment Guidance**
IMMUNITY to proximity fields from RF wireless communica-tions equipment	MHz	Modula-tion	Field Streng-th	MHz	Modula-tion	Field Streng-th	Portable and mobile RF communications equipment should be used no closer to any part of the STERIS Corporation CMAX XRAY-Series General Surgical Table, including cables, than the recommended separation distance calculated from the equation applicable to the frequency of the transmitter. Recommended separation distance: E = [6/d] √P d = [6/E] √P where P is the maximum output power rating of the transmitter in watts (W) according to the transmitter manufacturer, d is the recommended separation distance in meters (m), and E is the field strength in V/m. Field strengths from fixed RF transmitters, as determined by an electromagnetic site survey, should be less than the compliance level in each frequency range. Interference may occur in the vicinity of
	385	18 Hz	27 V/m	385	18 Hz	27 V/m	
	450	18 Hz	28 V/m	450	18 Hz	28 V/m	
	710	217 Hz	9 V/m	710	217 Hz	9 V/m	
	745	217 Hz	9 V/m	745	217 Hz	9 V/m	
	780	217 Hz	9 V/m	780	217 Hz	9 V/m	
	810	18 Hz	28 V/m	810	18 Hz	28 V/m	
	870	18 Hz	28 V/m	870	18 Hz	28 V/m	
	930	18 Hz	28 V/m	930	18 Hz	28 V/m	
	1720	217 Hz	28 V/m	1720	217 Hz	28 V/m	
	1845	217 Hz	28 V/m	1845	217 Hz	28 V/m	
	1970	217 Hz	28 V/m	1970	217 Hz	28 V/m	
	2450	217 Hz	28 V/m	2450	217 Hz	28 V/m	
	5240	217 Hz	9 V/m	5240	217 Hz	9 V/m	
	5500	217 Hz	9 V/m	5500	217 Hz	9 V/m	
	5785	217 Hz	9 V/m	5785	217 Hz	9 V/m	
IMMUNITY to proximity magnetic fields IEC 61000-4-39	0.13-42	2.1 kHz	65.5 A/m	0.13-42	2.1 kHz	65.5 A/m	
	13.5-6	50 kHz	7.5 A/m	13.5-6	50 kHz	7.5 A/m	
	0.03-0	CW	8 A/m	0.03-0	CW	8 A/m	

Guidance and manufacturer's declaration – electromagnetic immunity							
The STERIS Corporation CMAX XRAY-Series General Surgical Table is intended for use in the electromagnetic environment specified below. The Customer or the user of the STERIS Corporation CMAX XRAY-Series General Surgical Table should ensure that it is used in such an environment							
Immunity test	**IEC 60601 Test Level**			**Compliance Level**			**Electromagnetic Environment Guidance**
							equipment marked with the following symbol: 
NOTE: These guidelines may not apply in all situations. Electromagnetic propagation is affected by absorption and reflection from structures, objects and people.							

Recommended separation distances between portable and mobile RF communications equipment as well as RF wireless communications equipment and the STERIS Corporation CMAX XRAY-Series General Surgical Table.				
The STERIS Corporation CMAX XRAY-Series General Surgical Table is intended for use in an electromagnetic environment in which radiated RF disturbances are controlled. The Customer or the user of the STERIS Corporation CMAX XRAY-Series General Surgical Table can help prevent electromagnetic interference by maintaining a minimum distance between portable and mobile RF communications equipment (transmitters) and the STERIS Corporation CMAX XRAY-Series General Surgical Table as recommended below, according to the maximum output power of the communications equipment.				
Rated maximum output power of transmitter (W)	Separation distance according to frequency of transmitter (m)			
	80 to 800 MHz d = [3.5/3] √P	800 MHz to 2.7 GHz d = [7/3] √P	710, 745, 780, 5240, 5500, 5785 MHz d = [6/9] √P	385, 450,810, 870, 930, 1720, 1845, 1970, 2450 MHz d = [6/28] √P
0.01	0.117	0.233	0.067	0.021
0.1	0.369	0.738	0.211	0.070
1	1.170	2.333	0.667	0.214
10	3.689	7.379	2.108	0.700

Recommended separation distances between portable and mobile RF communications equipment as well as RF wireless communications equipment and the STERIS Corporation CMAX XRAY-Series General Surgical Table.				
The STERIS Corporation CMAX XRAY-Series General Surgical Table is intended for use in an electromagnetic environment in which radiated RF disturbances are controlled. The Customer or the user of the STERIS Corporation CMAX XRAY-Series General Surgical Table can help prevent electromagnetic interference by maintaining a minimum distance between portable and mobile RF communications equipment (transmitters) and the STERIS Corporation CMAX XRAY-Series General Surgical Table as recommended below, according to the maximum output power of the communications equipment.				
100	11.66	23.33	6.670	2.143

For transmitters rated at a maximum output power not listed above, the recommended separation distance d in meters (m) can be estimated using the equation applicable to the frequency of the transmitter, where P is the maximum output power rating of the transmitter in watts (W) according to the transmitter manufacturer.

NOTE: At 80 MHz and 800 MHz, the separation distance for the higher frequency range applies.

NOTE: These guidelines may not apply in all situations. Electromagnetic propagation is affected by absorption and reflection from structures, objects and people.