STERIS®



STERIS 5095 General Surgical Table

Operator Manual

EN

56404485
Revision C

STERIS®

TABLE OF CONTENTS

Section Number	Description	Page
1	**A word from STERIS**	**i**
1.1	Introduction	i
1.2	Advisory	i
1.3	Indications for Use	i
1.4	Waste Disposal	i
1.5	Service Information	ii
1.6	Associated Publications	ii
1.7	Contact Information	ii
2	**Safety Precautions and Pinch Points**	**1**
2.1	Safety Precautions and Pinch Points Introduction	1
2.2	Introduction	1
2.3	Warnings and Cautions	1
2.4	Pinch Points	7
3	**Tabletop Articulation and Weight Limitation**	**11**
3.1	Tabletop Articulation and Weight Limitation	11
3.2	Positioning Patient on Table	11
3.3	Table Repositioning With Patient Aboard Not For Patient Transport!	12
3.4	Patient Safety Straps	12
4	**Definitions of symbols**	**13**
4.1	Symbols on Table	13
4.2	Hand Control Symbols	15
5	**Description and Specifications**	**19**
5.1	General Description	19
5.2	Overall Size (W x L x H)	20
5.3	Weight	20
5.4	Range of Motion	21
5.5	Line Power Input	21
5.6	Environmental Conditions	21
5.7	Transportation/Storage Conditions	21
5.8	EMC/High-Frequency Interference	24
5.9	Essential Performance	25
5.10	Image Amplification Coverage	25
6	**Before Using The Table**	**27**
6.1	Warnings and Cautions	27
6.2	Uncrating, Installing and Performing Maintenance	28
6.3	Grounding	28
6.4	Positioning the Table	28
6.5	Installing Battery Fuse (F8)	28
6.6	Installing Main Control Fuses (F6 and F7)	29
6.7	Connecting Table to AC Power	30
6.8	Connecting Universal Hand Control	31
6.9	Connecting Optional Foot Control	32
6.10	Installing/Removing Table Pads	32
6.11	Installing/Removing X-Ray Top	33

6.12 Accessories/Side Rails 34
7 Installing/Removing Dual-Articulating Head Rest 37
7.1 Installing/Removing Dual-Articulating Head Rest 37
7.2 Installing the Head Rest 37
7.3 Removing the Head Rest 37
8 Installing/Removing Leg Section 39
8.1 Installing the Leg Section 39
8.2 Removing the Leg Section 40
9 Surgical Table Operation 41
9.1 Warnings and Cautions 41
9.2 Operating the Surgical Table 42
9.3 Introduction 44
9.4 Operating the Universal Hand Control 45
9.5 Message Display With Numeric Error Codes 46
9.6 Power-On Error Messages 48
9.7 Reverse Patient Orientation 49
9.8 Optional Foot Control Operation 49
10 Backup (Override) Control System 51
10.1 Introduction 51
10.2 System Operation 51
10.3 Backup Hand Control Description 52
10.4 Return Backup Control System 53
11 Routine Maintenance 55
11.1 Read Before Performing Routine Maintenance 55
11.2 Bi-Weekly Maintenance 56
11.3 Monthly Maintenance 56
11.4 Replacement Parts 56
11.5 Auto Limit Sensor (ALS) Check 57
11.6 LEVEL Check 58
11.7 Auxiliary Control Check 58
12 Guidelines for Cleaning Surgical Tables 59
12.1 Introduction 59
12.2 Disinfectants 59
12.3 Cleaning Materials 59
12.4 Prolonging Mattress and Pad Lives 60
13 Instructions for Cleaning Surgical Tables 61
13.1 Introduction 61
13.2 Removing Gross Soils (After each use and weekly) 62
13.3 Cleaning Tabletop and Pads (After each use and weekly) 62
13.4 Cleaning Lower Surfaces, Yoke, Shrouds and Base (After each use and weekly) 62
13.5 Cleaning the Hand Control (After each use and weekly) 63
13.6 Cleaning Casters and Floor Locks (Weekly) 63
13.7 Cleaning Areas Exposed by Articulation (Weekly) 63
14 Battery Charging 65
14.1 The Charging Display 65
14.2 What You Should Know Before Charging the Batteries 65
14.3 Battery Charging Procedure 66
15 Sealing Table Covers 69
15.1 Sealing Introduction 69

15.2 Two-Part Base Cover (Stainless Steel) 69
15.3 One-Part Base Cover (Plastic) 71
16 Appendix A - EMC Compliance 73
16.1 EMC COMPLIANCE TECHNICAL DATA 73
17 Appendix B - BEACH CHAIR and advanced hand control 79
17.1 Introduction 79
17.2 Floor Locks 79
17.3 Hand Control for Beach Chair Operation 80
17.4 Beach Chair Limits 80
17.5 Preparing for Beach Chair Mode 80
17.6 Entering Beach Chair Mode 81
17.7 Exiting Beach Chair Mode 81
17.8 Level Table Function 82
17.9 Record Memory Modes 83

LIST OF FIGURES

Description		Page
Figure 2-1	Pinch Points (Illustration 1 of 2)	8
Figure 2-2	Pinch Points (Illustration 2 of 2)	9
Figure 4-1	Universal Hand Control	16
Figure 5-1	Table Components (Typical)	20
Figure 5-2	Range of Motion	22
Figure 5-3	Tabletop Dimensions, Typical	23
Figure 5-4	Image Amplification Coverage	23
Figure 5-5	Base Dimensions	24
Figure 6-1	Installing or Replacing Fuses	29
Figure 6-2	Installing or Replacing Main Fuses F6 and F7	30
Figure 6-3	Connecting Table to Facility Power (Typical)	30
Figure 6-4	Connecting Universal Hand Control	31
Figure 6-5	Connecting Optional Foot Control	32
Figure 6-6	Tabletop Pads	33
Figure 6-7	Aligning X-ray Top Posts to Mounting Holes	33
Figure 6-8	Snapping X-ray Top Into Position	34
Figure 7-1	Installing the Head Rest	37
Figure 8-1	Universal Hand Control,LCD Screen	39
Figure 8-2	Attaching Leg Section	39
Figure 8-3	Leg Section Removal	40
Figure 9-1	Adjusting Dual-Articulating Head Rest	43
Figure 9-2	Universal Hand Control Screen	44
Figure 9-3	Prompt to Select Correct Compatibility Mode	45
Figure 9-4	Example of Error Code Display - Error Code 20 Shown	46
Figure 10-1	Backup (Override) Control System	52
Figure 10-2	Backup (Override) Hand Control	53
Figure 14-1	INTELLIPOWER Panel LED Display	65
Figure 14-2	LED Relation to Battery Voltage	66
Figure 15-1	Apply Tape to Mounting Bracket	69
Figure 15-2	Ensure Base Cover Sits Flush on Base at Insert Opening	69
Figure 15-3	Seal Mating Areas Between Front and Rear Base Covers	70
Figure 15-4	Apply RTV to V-Shaped Cut-Outs	70
Figure 15-5	Seal Area Around Power Inlet	70
Figure 15-6	Seal Around Upper Plastic Covers and Column	71
Figure 15-7	Seal Along Both Seams of Upper Plastic Column Covers	71
Figure 15-8	Install Base Cover Insert and Attach to Base Cover	72
Figure 15-9	Seal Seam Between Base Cover Insert and Base Cover	72
Figure 17-1	Advance Hand Control (Required for Beach Chair Mode)	79
Figure 17-2	Entering Beach Chair Mode	81
Figure 17-3	Exiting Beach Chair Mode	82
Figure 17-4	Level Table Functions (Typical)	83
Figure 17-5	Record Memory Modes	84

STERIS®

LIST OF TABLES

Description Page

Table 4-1 Definition of Symbols on Surgical Table 13
Table 4-2 Universal Hand Control, Symbols 16
Table 6-1 STERIS 5095 General Surgical Table Specific Accessories* 34
Table 9-1 Universal Hand Control and Surgical Table Compatibility Mismatch 46
Table 9-2 Display Screen Numeric Error Codes 46
Table 11-1 Replacement Parts 57
Table 11-2 Replacement Parts, Pads 57
Table 13-1 Table Cleaning and Disinfection Tasks and Frequencies 61
Table 16-1 Guidance and Manufacturer s Declaration Electromagnetic Emissions For All Equipment and Systems (per IEC 60601-2 Clause 6.8.3.201 a 3 Table 201) 73
Table 16-2 Guidance and Manufacturer s Declaration Electromagnetic Immunity For All Equipmentand Systems (per IEC 60601-2 Clause 6.8.3.201 a 6 Table 202) 74
Table 16-3 Guidance and Manufacturer s Declaration Electromagnetic Immunity For Equipment and Systems That Are Not Life-Supporting (per IEC 60601-2 Clause 6.8.3.201 b Table 204) 75
Table 16-4 Recommended Separation Distances Between Portable and Mobile RF Communications Equipment and STERIS 4095 or 5095 General Surgical Tables (per IEC 60601-2 Clause 6.8.3.201 b Table 206) 76

A word from STERIS

1.1 Introduction

IMPORTANT: *Read this entire manual before attempting to install or operate your Surgical Table. Ensure all appropriate personnel understand the contents of this manual.*

1.2 Advisory

Safety Precautions and Pinch Points to be observed when operating and servicing the equipment are included in this manual. Do not operate or service the equipment until you have become familiar with this information.

WARNING- PERSONAL INJURY HAZARD AND POSSIBLE REGULATORY VIOLATION:

⚠ Any alteration of the surgical table not authorized or performed by STERIS which could affect its operation will void the warranty, could adversely affect operator safety and could violate national, state or local regulations.

Serious incidents that have occurred in relation to this medical device should be reported to the manufacturer and competent authority in the country where the incident occurred.

1.3 Indications for Use

The surgical table is an electro-hydraulically operated and designed to support virtually all general surgical procedures including cardiac and vascular, endoscopic, gynecology, urology, nephrectomy, neurology, ophthalmologic and orthopedics with the addition of STERIS table accessories.

1.4 Waste Disposal

WARNING-DISPOSAL HAZARD:

⚠ This product contains materials which may require disposal through appropriately licensed and permitted hazardous waste management firms.

CAUTION- POSSIBLE EQUIPMENT DAMAGE:

⚠ Use of incorrect hydraulic oil may severely damage the table and/or cause malfunction. Contact STERIS for proper hydraulic oil.

The following materials may be contained within the table. When disposing of the table or its parts, ensure the proper disposal of hazardous and other regulated waste in compliance with federal, state and local regulations.

Lead Acid (Pb/H_2SO_4): gelled cell batteries located in the table base at the head end of the table. Approximate weight 5 lbs. (2 kg).

Lead (Pb) in Solder: contained in solder on circuit boards and in some miscellaneous wire connections. Minute amounts.

Electronic and Electrical Parts: not known to require special disposal at date of this manual.

Metal Parts: made from aluminum (Al), steel (Fe), cast iron (Fe), copper (Cu), and copper alloys (Cu/x), plastic, synthetic rubber, plating (Cr, Ni, Zn, Au), and adhesives not known to require special disposal methods at date of this manual.

Hydraulic Oil: contained in hydraulic components located in the base, column, leg section, back section, and hydraulic system lines and hoses.

Polyvinylchloride (PVC): Approximate weight 3.8 lbs. (1.7 kg).

1.5 Service Information

A thorough preventive maintenance program is essential for safe and proper unit operation. This manual contains maintenance schedules and procedures which should be followed for satisfactory equipment performance. Comprehensive instructions for monthly, quarterly and semi-annual preventive maintenance can be found in the Maintenance Manual (available from STERIS).

Only STERIS-trained personnel should attempt to perform maintenance on the table, to avoid personal injury, improper equipment performance, invalidation of the equipment warranty or other costly damage.

Customers are encouraged to contact STERIS concerning our comprehensive preventive maintenance program. Under the terms of this program, preventive maintenance, adjustments and replacement of worn parts are provided on a scheduled basis to help ensure optimal equipment performance and help avoid untimely or costly interruptions. STERIS maintains a global staff of well equipped, factory-trained technicians to provide these services, as well as expert repair services. Please contact STERIS for details.

NOTE: A patient grounding post/potential equalization terminal (male connector, DIN 42801) is provided. The female connector for patient grounding is not furnished by STERIS.

1.6 Associated Publications

Tech Data Sheet - 056404-492

Maintenance Manual - P764333-472

Parts Catalog (IPB) - P764333-474

PowerLift Beach Chair (IFU) - P056404-439

Field Instructions, Voltage Setting (for export) - P150832-806

1.7 Contact Information

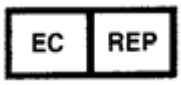

STERIS Ireland Limited
IDA Business and Technology Park
Tullamore
County Offaly
R35 X865 Ireland





Manufactured by:
STERIS Corporation
2720 Gunter Park East
Montgomery, AL 36109 USA
TEL: 334 277 6660
8004449009
www.steris.com

Class 1 Equipment

Type B Equipment



Splash-Proof Equipment (enclosed equipment protected against splashing water, IPX4)



Equipment not suitable for use in the presence of a flammable anesthetic mixture with air or oxygen or nitrous oxide.

Suitable for intermittent operation 3 min/hr.

Safety Precautions and Pinch Points

2.1 Safety Precautions and Pinch Points Introduction

IMPORTANT: *Understand the following points regarding floor locks.*

Floor locks:

- **Cannot be disengaged unless slide is less than 2.5 (64mm) toward short end of table base.**
- **When engaged, all motions are full range.**
- **When disengaged, all motions are full range except slide, which is limited to 2.5 (64mm)**
- **of travel toward short end of table base.**

2.2 Introduction

The following *Safety Precautions* **must** be observed when operating or servicing this surgical table. WARNING indicates the potential for personal injury and CAUTION indicates the potential for damage to equipment. For emphasis, certain Safety Precautions are repeated throughout the manual. **It is important to review ALL *Safety Precautions* before operating or servicing the unit.**

2.3 Warnings and Cautions

WARNING-PERSONAL INJURY HAZARD AND POSSIBLE REGULATORY VIOLATION:

Any alteration of the surgical table not authorized or performed by STERIS which could affect its operation will void the warranty, could adversely affect operator safety and could violate national, state or local regulations.

WARNING-PINCHING HAZARD:

Pinch points are created during tabletop articulation. Become familiar with all pinch points prior to operating the table.

To avoid serious injury, keep limbs, fingers and other body areas clear of all pinch points when positioning the table.

When manually positioning table sections, stay clear of potential pinching hazards.

WARNING-TIPPING HAZARD:

Do not place patient on the table unless floor locks are engaged.

The table is not to be used to transport patients. With exception of slight repositioning, as detailed in the operating instructions, never disengage floor locks when patient is on table. Failure to heed this warning can result in injury to both the patient and the operating room staff.

Do not use this table for patients exceeding the maximum patient weight of:

- **1200lbs. (544 kg)** Load, **Normal** and **Reverse** Patient Position; raise or lower only (no tabletop articulation or slide).
- **900lbs. (408 kg)** Load, **Normal** and **Reverse** Patient Position; raise or lower; includes all tabletop articulation except tabletop slide.
- **600lbs. (272 kg)** Load, **Normal** Patient Position; raise or lower; includes all tabletop articulation and full tabletop slide.

Center tabletop over column before applying chest compressions.

Center tabletop over column before transferring patient on or off of table.

WARNING-EXPLOSION HAZARD:

Table must not be used in the presence of flammable anesthetics.

WARNING-TRIPPING HAZARD:

Route the power cord to the receptacle to minimize being tripped over by personnel in the area.

WARNING-PERSONAL INJURY HAZARD:

Failure to keep the patient properly secured with the patient safety straps at all times could result in death or serious injury.

The table is not to be used to transport patients. With exception of slight repositioning, as detailed in the operating instructions, never disengage floor locks when patient is on table. Failure to heed this warning can result in injury to both the patient and the operating room staff.

Keep hands and feet clear of the unloading platform and the table base when unloading the table. Serious personal injury could result.

Healthcare professionals must ensure patients are positioned and monitored so as to prevent compromising respiration, nerve pathways or circulation.

When installing any table accessory, check for correct attachment and tighten securely (if appropriate). Do not use a worn or damaged accessory. Before using any accessory, ensure it has been installed properly.

Patient must be secured to the table in accordance with recommended positioning practices. Unanticipated patient or table movement could result in death or serious injury.

When cleaning/disinfecting table, do not use phenolics which may cause patient skin burns if inadequately rinsed off, or alcohol, which does not have sufficient cleaning/disinfecting properties.

Do not exceed 350 lbs. (159 kg) on the leg section.

Dual-articulating headrest side rails support 100 ft-lbs. (135 Nm) maximum. The headrest end rail supports 50 ft-lbs. (67 Nm) maximum. Exceeding these limits could result in injury or equipment damage.

If the integrity of the external protective ground installation or arrangement is in doubt, operate the table from its internal power source.

If an antistatic path is necessary, STERIS recommends antistatic pads (specifically developed for this table) in direct contact with the patient. Table must also be positioned on antistatic floor or connected to equalization device (equipotential connector).

Do not remove table leg section if patient is not properly positioned. Patient's torso and buttocks must be firmly held in place by table back and seat sections and legs supported by leg supports.

WARNING-INSTABILITY HAZARD:

Possible patient or user injury, as well as table or accessory failure, may result from using STERIS table accessories for other than their stated purpose or from using accessories manufactured and sold by other companies on STERIS surgical tables.

WARNING-PINCHING AND TIPPING HAZARD:

Patient injury may result if the operator of this table is not completely familiar with the controls for tabletop articulation and table operation.

WARNING-PERSONAL INJURY AND/OR EQUIPMENT DAMAGE HAZARD:

Repairs and adjustments to this equipment must be made only by STERIS or STERIS-trained service personnel. Maintenance performed by unqualified personnel or installation of unauthorized parts could cause personal injury, result in improper equipment performance, invalidate the warranty, or result in costly damage. Contact STERIS regarding service options.

Regularly scheduled preventive maintenance is required for safe and reliable operation of this equipment. Contact STERIS to schedule preventive maintenance.

Do not service or perform maintenance on equipment while in use.

Table is factory set to operate at a certain voltage. Use of any other power supply could result in serious personal injury or table damage.

To avoid the risk of electric shock, this equipment must only be connected to a supply mains with protective earth.

Use of this table in the presence of flammable anesthetics could result in serious personal injury or table damage.

Do not use this table for patients exceeding the maximum patient weight of:

- **1200lbs. (544 kg)** Load, **Normal** and **Reverse** Patient Position; raise or lower only (no tabletop articulation or slide).
- **900lbs. (408 kg)** Load, **Normal** and **Reverse** Patient Position; raise or lower; includes all tabletop articulation except tabletop slide.
- **600lbs. (272 kg)** Load, **Normal** Patient Position; raise or lower; includes all tabletop articulation and full tabletop slide.

Failure to perform periodic inspections of table could result in serious personal injury or equipment damage.

The Auto Limit Sensors (ALS) System suggested alternative tabletop movement does not take into account the type of surgery that may be in process or the environment (e.g., other equipment close by) and might not be compatible with the surgical procedure. To avoid an action that could result in death or serious injury to the patient and the operating room staff, and/or serious equipment damage, completely evaluate the feasibility of the suggestion.

ALS System is not active during Backup Control. Ensure proper tabletop movements to prevent patient/staff injury and/or equipment damage.

During Backup Control, tabletop functions are available even if table floor locks are NOT engaged. LOCK table before moving tabletop or transferring patient.

Use of accessories, transducers or cables with this table, other than those specified, may result in increased emissions or decreased immunity of the table.

Do not store items on table base. Doing so may result in equipment damage or inadvertent tabletop movement placing the patient and/or user at risk of injury.

Failure to keep all personnel and equipment clear of the table before actuating any inertia-driven or power-driven movement could result in table damage and/or personal injury.

Hand Control must be attached to table at all times to enable safety stop and all modes of operation.

With patient in normal or reverse orientation, table in Trendelenburg and slide at head limit, center tabletop before attempting to raise table to level or move into Reverse Trendelenburg.

Read and understand all instructions presented in this section before using the Universal Hand Control. Follow each step in the order presented in these instructions. If you need technical assistance or additional instructions, please contact STERIS.

Dual-articulating headrest side rails support 100 ft-lbs. (135 Nm) maximum. The headrest end rail supports 50 ft-lbs. (67 Nm) maximum. Exceeding these limits could result in injury or equipment damage.

WARNING-DISPOSAL HAZARD:

This product contains materials which may require disposal through appropriately licensed and permitted hazardous waste management firms.

WARNING-INFECTION HAZARD:

To protect against aerosols being reflected from potentially contaminated surfaces, wear rubber or plastic gloves, masks and eye protection, and follow OSHA blood-borne pathogens standards when cleaning.

When cleaning/disinfecting table, do not use alcohol as it does not have sufficient cleaning/disinfection properties.

CAUTION-POSSIBLE EQUIPMENT DAMAGE:

When moving the table to or from point of use, roll it carefully at moderate speed and only over smooth floors. Maximum floor clearance is 1/4" (6.4 mm). Avoid door and elevator jambs, and obstructions greater than 1/4" (6.4mm). If necessary, lift table over obstructions, onto trucks, etc. Lift table evenly and only by the table base. DO NOT transport articles (including accessories) on top of the table, and **DO NOT use a forklift to move the uncrated table.**

Hang the hand control from side rail of the table when not in use to avoid possible damage to the control.

When cleaning/disinfecting table, thoroughly read the cleaning fluid directions for use and follow all directions and cautions as shown.

Do not spray cleaning fluid into electric receptacles and avoid spraying directly on emergency backup buttons or into clearance space. Spray or drippage may settle onto electric circuits inside table causing corrosion and loss of function.

Cleaning procedures requiring articulation of the table should be performed only by persons familiar with table operation.

Route the hand control cord clear of any pinch points where cord could be damaged.

Use of incorrect hydraulic oil may severely damage the table and/or cause malfunction. Contact STERIS for proper hydraulic oil.

After performing cleaning procedures, ensure pads, tabletop and X-ray tops are completely dry before reinstalling. Moisture trapped between pads and X-ray tops may contribute to equipment damage, such as X-ray top warpage.

Appropriate components of this surgical table have been tested and found in compliance with IEC 60601-1-2: Edition 4 2014-02, Medical Electrical Equipment Part 1; General Requirements for Safety; Electromagnetic Compatibility (EMC). There is, however, a potential for electromagnetic or other interference between this equipment and other devices. Should user experience interference, relocate this device or minimize the use of the affected equipment while this device is in operation.

Surgical table operation may be temporarily affected if portable or mobile RF communications equipment is used in close proximity.

Medical Electrical Equipment needs special precautions regarding EMC. Put table into service according to the EMC information provided in this manual.

Possible EMC increased EMISSIONS or decreased IMMUNITY. Do not use accessories or replacement parts not listed in the Operator or Maintenance Manuals.

Surgical table operation may be affected if used adjacent to or stacked with other equipment. If adjacent or stacked use is needed, ensure table operates properly in this configuration.

The emissions characteristics of this equipment make it suitable for use in industrial areas and hospitals (CISPR 11 Class A). If it is used in a residential environment (for which CISPR 11 Class B is required) this equipment might not offer adequate protection to radio frequency communication services. The user might need to take mitigation measures, such as relocating or re-orienting the equipment.

REMEMBER-POSSIBLE TIME DELAY:

Insufficient clearance space will make repairs more difficult and time-consuming. Refer to the equipment drawing for minimum clearance for service/maintenance access requirements.

2.4 Pinch Points

WARNING-PINCHING HAZARD:

- Pinch points are created during tabletop articulation. Carefully review and possess a full understanding of all pinch points before operating the table.
- To avoid serious injury, keep limbs, fingers and other body areas clear of all pinch points when positioning the table.

WARNING-PERSONAL INJURY AND/OR EQUIPMENT DAMAGE HAZARD:

Failure to keep all personnel and equipment clear of the table before actuating any inertia-driven or power-driven movement could result in table damage and/or personal injury.

When inertia-driven or power-driven table parts close (especially during extreme tabletop articulation), pinch-point hazards exist. All personnel involved in tabletop positioning **must** examine and be aware of **all** pinch points before operating the surgical table.

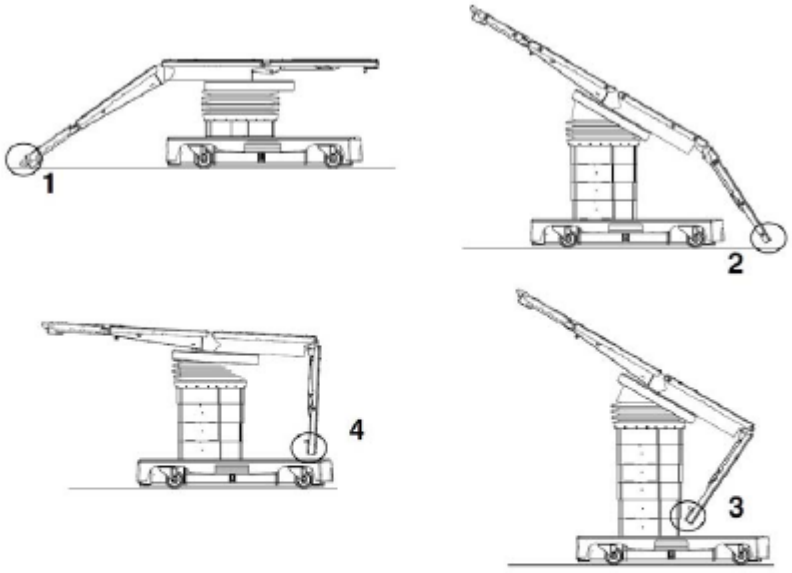

Pinch points:

1. Between Head Rest and Floor
2. Between Leg Section and Floor
3. Between Leg Section and Column Cover
4. Between Leg Section and Base Cover

Figure 2-1. Pinch Points (Illustration 1 of 2)

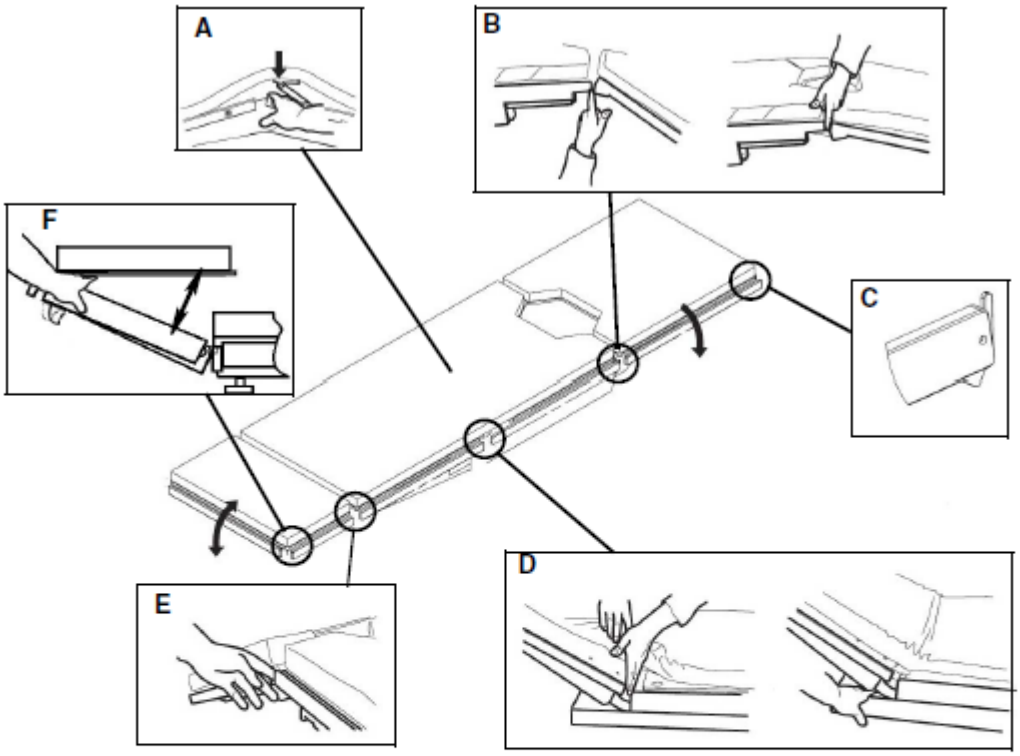

Pinch points:

A) Between Kidney™ Elevator Mechanism and Seat Section
B) Between Leg Section and Seat Section
C) Side Rail Lock
D) Between Back Section and Seat Section
E) Between Dual-Articulating Head Rest and Back Section
F) Between Head Board and Head Rest Base

Figure 2-2. Pinch Points (Illustration 2 of 2)

STERIS®

Tabletop Articulation and Weight Limitation

3.1 Tabletop Articulation and Weight Limitation

WARNING-TIPPING HAZARD:

- **Do not place patient on the table unless floor locks are engaged.**
- **Do not use this table for patients exceeding the maximum patient weight of:**

⚠

- **1200lbs. (544 kg)** Load, **Normal** and **Reverse** Patient Position; raise or lower only (no tabletop articulation or slide).
- **900lbs. (408 kg)** Load, **Normal** and **Reverse** Patient Position; raise or lower; includes all tabletop articulation except tabletop slide.
- **600lbs. (272 kg)** Load, **Normal** Patient Position; raise or lower; includes all tabletop articulation and full tabletop slide.

WARNING-TIPPING HAZARD:

- With exception of slight repositioning, as detailed in the operating instructions, floor locks must be engaged when patient is on table. Failure to engage the floor locks before placing a patient on the table or disengaging the floor locks while a patient is on the table could result in the table rolling unexpectedly during the procedure. Failure to heed this warning can result in injury to both the patient and the operating room staff.

⚠

- Healthcare professionals must ensure patients are positioned and monitored to prevent compromising respiration, nerve pathways or circulation.
- Do not exceed 350 lbs. (159 kg) on the leg section.
- Dual-articulating headrest side rails support 100 ft-lbs. (135 Nm) maximum. The headrest end rail supports 50 ft-lbs. (67 Nm) maximum. Exceeding these limits could result in injury or equipment damage.

NOTE: Accessories may have a specified weight limitation that is less than that of the table. Do not exceed the lowest weight limit, table or accessory.

Do not exceed the maximum patient weights specified in the associated Warnings.

IMPORTANT: *Understand the following points regarding floor locks.*

Floor locks:

Cannot be disengaged unless slide is less than 2.5 (64mm) toward short end of table base.

When engaged, all motions are full range.

When disengaged, all motions are full range except slide, which is limited to 2.5 (64mm) of travel toward short end of table base.

3.2 Positioning Patient on Table

1. **Always check patient stability when patient is positioned.**

2. **Do not place patient on the table unless floor locks are engaged.**
3. **Use extreme care when transferring patients to or from table.**
4. **Ensure all accessories are properly installed and secured.**
5. **Check for and eliminate harmful patient pressure points once patient is positioned.**
6. **Have a qualified medical professional monitor patient during surgery for all possible tabletop articulation hazards.**
7. **Do not exceed 350 lbs. (159 kg) on the Leg Section. Leg Section is not designed to support full body weight.**
8. **Dual-articulating headrest side rails support 100 ft-lbs. (135 Nm) maximum. The headrest end rail supports 50 ft-lbs. (67 Nm) maximum. Exceeding these limits could result in injury or equipment damage.**

   IMPORTANT: All patients must be restrained for proper safety regardless of the length or type of procedure.

   NOTE: STERIS recommends only using STERIS manufactured or distributed accessories with this table. Use of accessories not manufactured or approved by STERIS may not be compatible with this table and could result in injuries or equipment damage.

3.3 Table Repositioning With Patient Aboard Not For Patient Transport!

If the table needs to be repositioned within the operating room with the patient aboard, utilize the following procedure:

1. **Ensure patient is properly secured.**
2. **Center and level tabletop with patient over column.**
3. **Lower tabletop to lowest possible height.**
4. **Ensure table path is clear of obstructions.**
5. **One person must be at each end of tabletop.**
6. **Release floor locks.**
7. **If the table is moved with the patient aboard, apply only lateral force to reposition table.**

   DO NOT push down on or lift tabletop while repositioning table.
8. **Once table is repositioned, lock table by engaging all floor locks.**

3.4 Patient Safety Straps

WARNING-PERSONAL INJURY HAZARD:



Failure to keep the patient properly secured with the patient safety straps at all times could result in death or serious injury.

Adjust the patient safety straps such that they restrain the patient according to currently accepted patient restraining practices, keeping in mind the Trendelenburg/Reverse Trendelenburg, back, lateral tilt and height adjustment.

Definitions of symbols

4.1 Symbols on Table

The following is a key to symbols on the general surgical table.

Table 4-1. Definition of Symbols on Surgical Table

Symbol	Definition
	Type B Equipment
	Protective Earth Ground
	Equipotentiality
	Electric Shock Hazard
	Control Power ON
	Control Power OFF
	Powered By AC

Table 4-1. Definition of Symbols on Surgical Table (continued)

Symbol	Definition
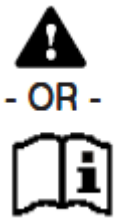	Attention, Consult Manual for Further Instructions
	Safety Warning
A	Amperage Rating of the Unit
V	Voltage Rating of Unit
~	Alternating Current
Hz	Frequency Rating of Unit
W	Power Rating
SN	Serial Number of the Unit
IPX4	Splash-Proof Equipment
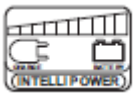	INTELLIPOWER® Dual Power System Power Panel (Battery Charge/Discharge Status)
	Powered By Battery

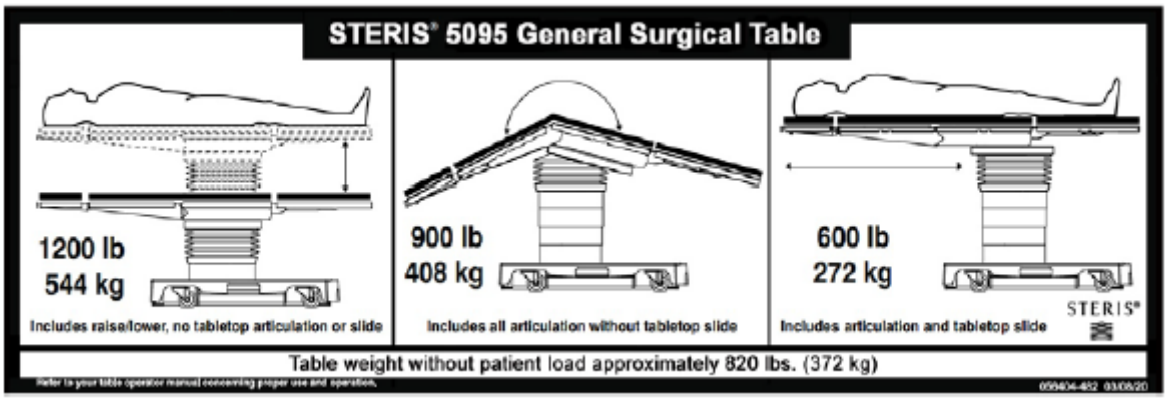

4.2 Hand Control Symbols

This section identifies the iconic hand control buttons and the symbols which can present themselves on the LCD screen.



***SLIDE HEAD** - Also used to indicate YES when prompted to change comparability table mode.

SLIDE FOOT - Also used to indicate NO when prompted to change comparability table mode.

Figure 4-1. Universal Hand Control

Table 4-2. Universal Hand Control, Symbols

Symbol	Color	Definition
	Green	POWER: Table is connected to facility power
	Green	POWER: Table is running with a fully charged battery
	Orange/Yellow	POWER: Table is running with a half-charged battery

Table 4-2. Universal Hand Control, Symbols (continued)

Symbol	Color	Definition
	Red/Yellow	POWER: Table is running with a discharged battery
	Green	FLOOR LOCK STATUS: Floor locks are engaged
	Orange	FLOOR LOCK STATUS: Floor locks are not engaged
	Orange	MAINTENANCE: Surgical table has detected a condition requiring Service
	Blue/Yellow symbol with Orange text	AUTO LIMIT SENSOR (ALS): ALS sensors activating to prevent table collision with obstacle
	Blue	KIDNEY BRIDGE: Bridge is extended.
	Blue	HEAD/FOOT: Slide is positioned toward patient s head
	Blue	HEAD/FOOT: Slide is positioned toward patient s foot
	Green	KEY PRESS: Key has been pressed on Universal Hand Control
	Cyan	REFER TO INSTRUCTIONS: Reminds user to refer to supplied Operator Manual
	Blue	INCHES: Indicates slide position readout is displayed in inches
	Blue	CENTIMETER: Indicates slide position readout is displayed in centimeters
	Blue	POINTER: Indicates button user needs to push when selecting compatibility mode

STERIS®

Description and Specifications

5.1 General Description

CAUTION- POSSIBLE EQUIPMENT DAMAGE:

Appropriate components of this surgical table have been tested and found in compliance with IEC 60601-1-2: Edition 4 2014-02, Medical Electrical Equipment Part 1; General Requirements for Safety; Electromagnetic Compatibility (EMC). There is, however, a potential for electromagnetic or other interference between this equipment and other devices. Should user experience interference, relocate this device or minimize the use of the affected equipment while this device is in operation.

The mobile and electro-hydraulically operated surgical table is specifically designed to provide the complete tabletop articulation flexibility required for modern surgical care facilities. It features powered lateral tilt, Trendelenburg/Reverse Trendelenburg and adjustable height functions.

Additional features include:

- **designed to safely function with patients not exceeding the maximum patient weight limit:**
  - **1200lbs. (544 kg) Load, Normal and Reverse Patient Position; raise or lower only (no tabletop articulation or slide).**
  - **900lbs. (408 kg) Load, Normal and Reverse Patient Position; raise or lower; includes all tabletop articulation except tabletop slide.**
  - **600lbs. (272 kg) Load, Normal Patient Position; raise or lower; includes all tabletop articulation and full tabletop slide.**
- **constructed of aluminum alloy, stainless steel and other high quality materials.**
- **equipped with a large sliding table top providing unrestricted radiological access without patient reversing.**
- **powered by either internal battery or facility electric through use of the patent-pending INTELLIPOWER® dual power system.**

The table accepts positioning commands from three sources, each of which is detailed elsewhere:

1. **A universal hand control**
2. **An optional physician-controlled foot control (which includes Trendelenburg Tilts, Lateral Tilts and Height functions).**
3. **An Auxiliary Control System permits table operation in the event of primary control malfunction**

NOTE: The Dual-Articulating Head Rest is manually adjustable.

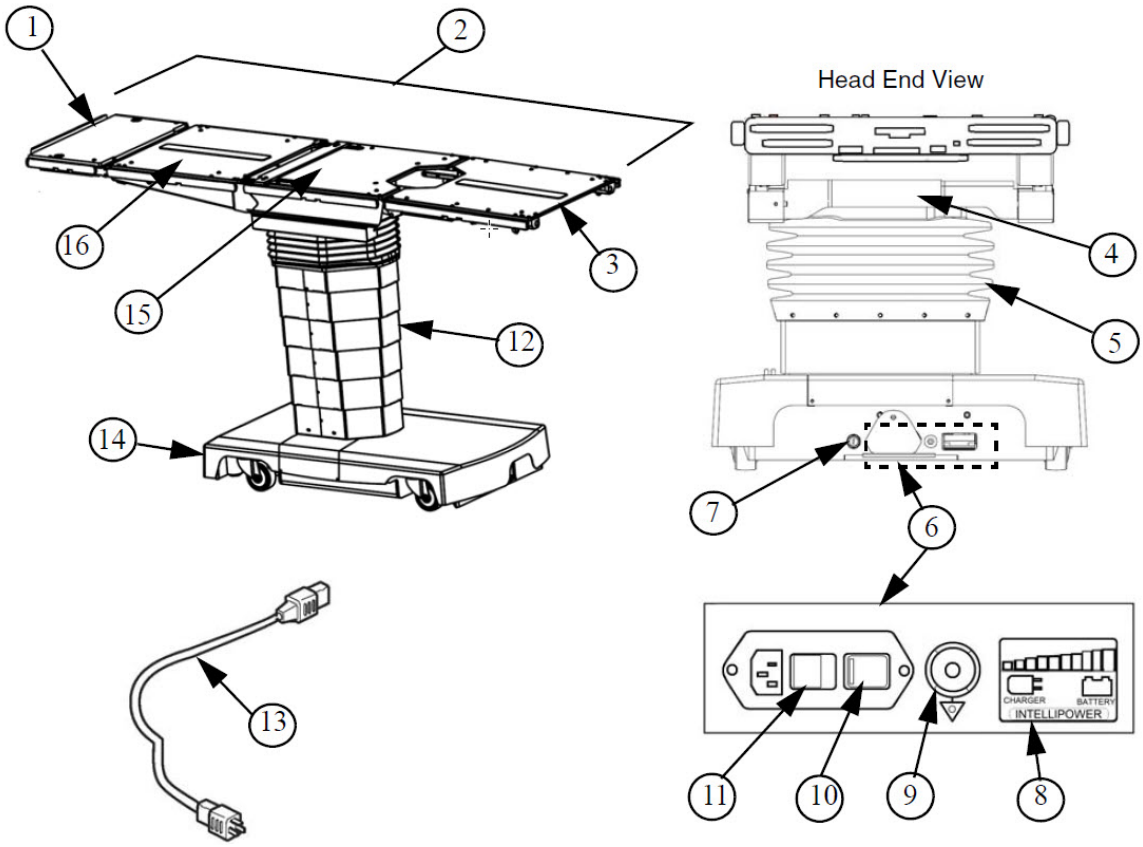

Figure 5-1. Table Components (Typical)

Legend:

1. Head Section*
2. Tabletop
3. Leg Section
4. Connection Panel †
5. Bellows
6. Power Panel
7. Battery Fuse
8. INTELLIPOWER Display
9. Ground Equalizaion Terminal (Male)
10. Primary Fuses
11. Main Power Switch
12. Column
13. Power Cord
14. Table Base
15. Seat Section (Sliding)
16. Back Section
17. Backup (Override) Control (Not Shown)
18. Foot Pump (Hydraulic) Pedal (Not Shown)

*Headrest, Dual-Articulating
† Connections for Universal Hand Control, Backup (Override), and Optional Foot Pedal Control

5.2 Overall Size (W x L x H)

20 x 81 x 22.8 to 42.5" (508 x 2057 x 581 to 1080 mm)[1]

5.3 Weight

Table: Approximately 820 lbs. (372 kg)

1. ** Society of Automotive Engineers (SAE) Measurements are based on the metric dimensions; and are therefore approximate.*

5.4 Range of Motion

Height: 22.8 to 42.5" ± 0.25 (581 to 1080 mm ± 6 mm)

Trendelenburg Range: 30° ±2°

Reverse Trendelenburg Range: 30° ±2°

Lateral Tilt Range: 20° ±2°

Slide Motion:
- HEAD: 9" ± 0.25 (227 mm ± 6 mm) from center
- FOOT: 9" ± 0.25 (227 mm ± 6 mm) from center

Back Section Motion: UP: 82° ±2°; DOWN: 40° ±2°

Leg Motion: UP: 0° ±2°; DOWN: 105° ±2°

Kidney Elevator Mechanism: 4" +0.4 / -0.2 (102 mm + 10 mm / -5 mm)

Flex/Reflex: 140° ±2° / 98° ±2°

Head Motion (Manual): 90° ±2° in 15° ± 1° increments

5.5 Line Power Input

100 or 120, 220, or 230-240 Vac, One-Phase, 50/60 Hz, 4.0 Amp

Each table is shipped from the factory configured to the electrical requirement specified on the factory order. If this electrical configuration needs to be changed in the field, consult STERIS for the needed procedure and required materials.

5.6 Environmental Conditions

Temperature: 63-77°F (17-25°C)

Relative Humidity: 20-80% RH

Atmospheric Pressure: 700-1060 hPa

5.7 Transportation/Storage Conditions

Ambient Temperature: -40 - 158°F (-40 - 70°C); Not to exceed 15weeks.

Relative Humidity: 10-100% non-condensing

Atmospheric Pressure: 500-1060 hPa

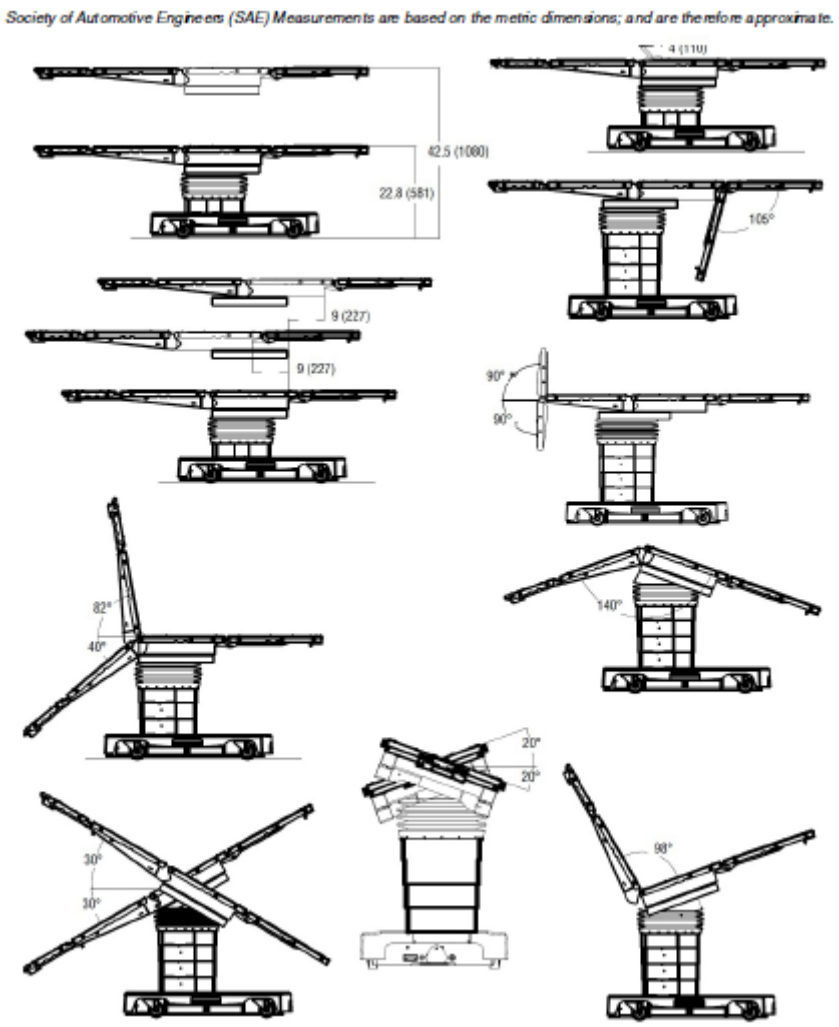

Figure 5-2. Range of Motion

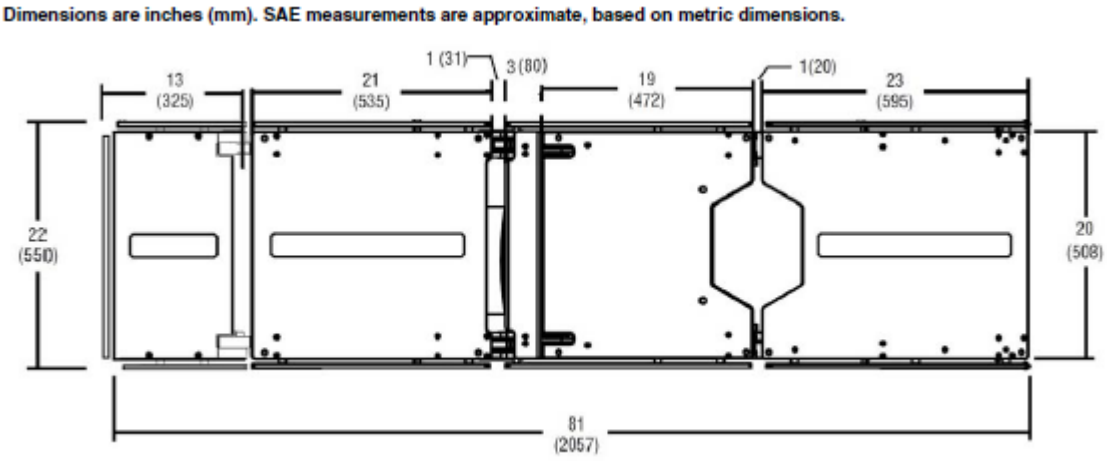

Figure 5-3. Tabletop Dimensions, Typical

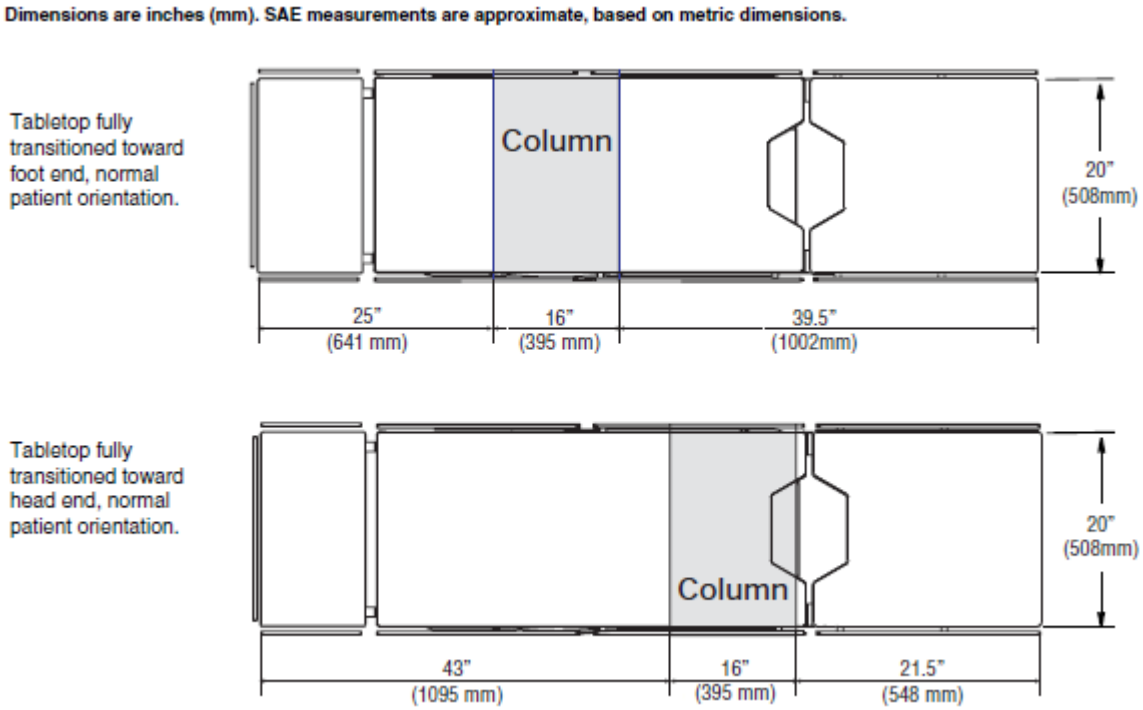

Figure 5-4. Image Amplification Coverage

Dimensions are inches (mm). SAE measurements are approximate, based on metric dimensions.

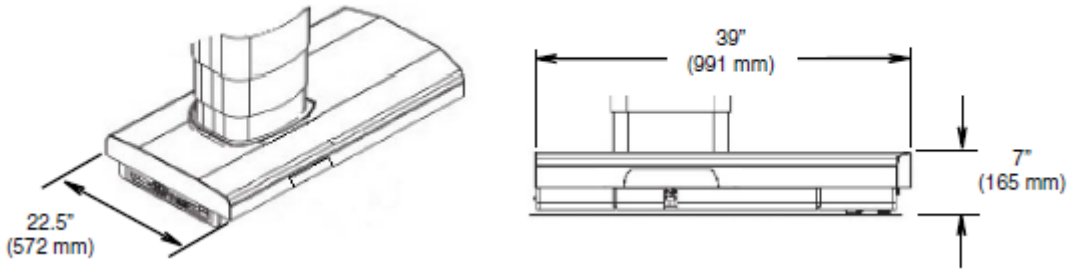

Figure 5-5. Base Dimensions

5.8 EMC/High-Frequency Interference

WARNING-PERSONAL INJURY AND/OR EQUIPMENT DAMAGE HAZARD:

⚠ Use of accessories, transducers or cables with this table, other than those specified, may result in increased emissions or decreased immunity of the table.

WARNING-PERSONAL INJURY HAZARD:

⚠ Appropriate components of this surgical table have been tested and found in compliance with IEC 60601-2-46, 3rd Edition, Medical Electrical Equipment - Part 2-46: Particular requirements for the basic safety and essential performance of operating tables. There is, however, a potential that high frequency surgical equipment, cardiac defibrillators or cardiac defibrillator-monitors could interfere with this equipment and cause unanticipated table movement producing possible patient and/or staff injury. Should user experience any interference, relocate this device or minimize the use of the interfering equipment while this device is in operation.

CAUTION- POSSIBLE EQUIPMENT DAMAGE:

⚠ Appropriate components of this surgical table have been tested and found in compliance with IEC 60601-1-2: Edition 4 2014-02, Medical Electrical Equipment Part 1; General Requirements for Safety; Electromagnetic Compatibility (EMC). There is, however, a potential for electromagnetic or other interference between this equipment and other devices. Should user experience interference, relocate this device or minimize the use of the affected equipment while this device is in operation.

Note the following:

- **Medical Electrical Equipment needs special precautions regarding EMC and needs installed and put into service according to the EMC information provided in this manual.**
- **Portable and mobile RF communications equipment can affect Medical Electrical Equipment.**
- **For table control via e-Serve (RS-232) connection, note the table has been tested for EMC compliance using a 6 (2 m) long, shielded serial cable. A longer or unshielded cable could cause problems and must be observed to verify normal operation.**
- **The use of accessories, transducers and cables other than those specified by the manufacturer, may result in increased emissions or decreased immunity of the surgical table.**

- **The surgical table should not be used adjacent to or stacked with other equipment. If so, table should be observed to verify normal operation.**
- **Medical Electrical Equipment needs special precautions regarding high frequency interference. Equipment needs installed and put into service according to facility regulations and procedures.**
- **Potential hazards from the interfering high-frequency device could be patient burns and/or electrical shock of patient and operator.**
- **Potential explosion hazards caused by the interfering high-frequency device because this surgical table is not suitable for use in the presence of a flammable anesthetic mixture with air or oxygen or nitrous oxide.**

5.9 Essential Performance

Essential Performance for Surgical Tables:

1. **Support a patient without unwanted movement under single fault conditions.**
2. **Single fault conditions can include electrical, electromagnetic effects or mechanical problems.**
3. **In extreme cases of electromagnetic interference, operator may experience temporary loss of table function. This situation can be corrected by removing source of interference and power cycling surgical table if necessary.**

5.10 Image Amplification Coverage

Image amplification coverage for the surgical table is as presented in the **EMC High-Frequency Interference** topic.

STERIS®

Before Using The Table

6.1 Warnings and Cautions

WARNING-PERSONAL INJURY HAZARD AND POSSIBLE REGULATORY VIOLATION:

Any alteration of the surgical table not authorized or performed by STERIS which could affect its operation will void the warranty, could adversely affect operator safety and could violate national, state or local regulations.

WARNING-PERSONAL INJURY HAZARD:

- Keep hands and feet clear of the unloading platform and the table base when unloading the table. Serious personal injury could result.
- If the integrity of the external protective ground installation or arrangement is in doubt, operate the table from its internal power source.

WARNING-EXPLOSION HAZARD:

Table must not be used in the presence of flammable anesthetics.

WARNING-TRIPPING HAZARD:

Route the power cord to the receptacle to minimize being tripped over by personnel in the area.

WARNING- PERSONAL INJURY AND/OR EQUIPMENT DAMAGE HAZARD:

Table is factory set to operate at a certain voltage. Use of any other power supply could result in serious personal injury or table damage.

CAUTION- POSSIBLE EQUIPMENT DAMAGE:

When moving the table to or from point of use, roll it carefully at moderate speed and only over smooth floors. Maximum floor clearance is 1/4" (6.4 mm). Avoid door and elevator jambs, and obstructions greater than 1/4" (6.4mm). If necessary, lift table over obstructions, onto trucks, etc. Lift table evenly and only by the table base. DO NOT transport articles (including accessories) on top of the table, and DO NOT use a forklift to move the uncrated table.

Before using the table, either in regard to operating it or performing maintenance, in addition to the above warnings and cautions, ensure familiarity with all safety precautions and pinch point locations.

6.2 Uncrating, Installing and Performing Maintenance

WARNING-PERSONAL INJURY HAZARD AND POSSIBLE REGULATORY VIOLATION:

Any alteration of the surgical table not authorized or performed by STERIS which could affect its operation will void the warranty, could adversely affect operator safety and could violate national, state or local regulations.

Check the overall condition of the table and all applicable accessories/options upon receipt to ensure nothing was damaged during shipment. If damage appears to have occurred, contact the shipping company and STERIS.

STERIS recommends that only STERIS-trained or STERIS-supervised personnel attempt to uncrate/crate, install and perform maintenance on the surgical table. Uncrating, crating, installation or maintenance by others may result in personal injury or damage to the product.

6.3 Grounding

A patient grounding post/potential equalization terminal (male connector, DIN 42801) is provided. The mating female connector for patient grounding is not furnished by STERIS.

6.4 Positioning the Table

WARNING-PERSONAL INJURY HAZARD:

If an antistatic path is necessary, STERIS recommends the use of antistatic pads (specifically developed for this table) in direct contact with the patient. Table must also be positioned on antistatic floor or connected to equalization device (equipotential connector).

Position table at desired location, ensuring that the Vac electrical outlet is marked for the applicable power system in the range of 100-240 Vac.

Note that the power cord is approximately 18 ft (5.5 m) long.

NOTE: The table is equipped with INTELLIPOWER® dual power system modes, enabling to operate from connection to AC power or on its own battery power.

6.5 Installing Battery Fuse (F8)

If not installed, install 16A battery fuse (F8) (available in fuse set 342212555) into table base as follows:

1. **Locate correct battery fuse.**
2. **At foot-end of table base, unscrew and remove black fuse cap.**
3. **Insert fuse in cap.**
4. **Insert fuse (with cap) into fuse holder assembly in table base.**
5. **Push in fuse and cap and turn a quarter turn to lock assembly into table base.**

NOTE: If table is going to be stored for more than six months, remove fuse to limit battery discharge.

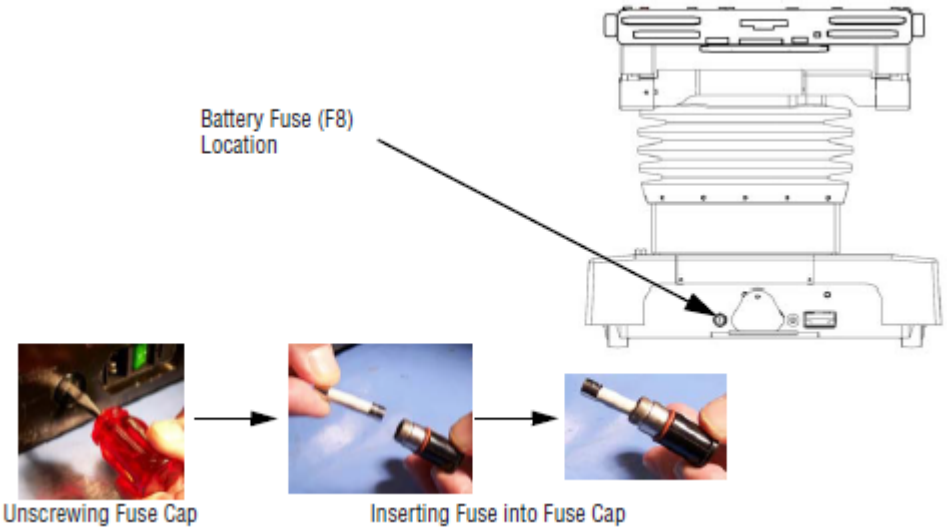

Figure 6-1. Installing or Replacing Fuses

6.6 Installing Main Control Fuses (F6 and F7)

If not installed, install two 4 Amp main control fuses (F6 and F7) (639600038) into head-end of table base as follows:

1. **Locate F6 and F7, 4 Amp fuses, in a cartridge beside the ac input at head-end of table base.**
2. **Turn power OFF.**
3. **Disconnect ac power cord from wall receptacle.**
4. **Pry cartridge out with a small screwdriver to access fuses.**
5. **Remove blown fuse(s) and replace.**
6. **Push cartridge back into connected position.**
7. **Remove battery fuse at foot-end of table base.**
8. **Reconnect ac power cord to wall receptacle.**
9. **Turn power ON.**
10. **Verify INTELLIPOWER dual power system indicates table is operating on ac power (green LED must be ON).**
11. **Ensure table functions properly.**
12. **Return battery fuse.**

If table is going to be stored for more than six months, remove fuse to limit battery discharge.

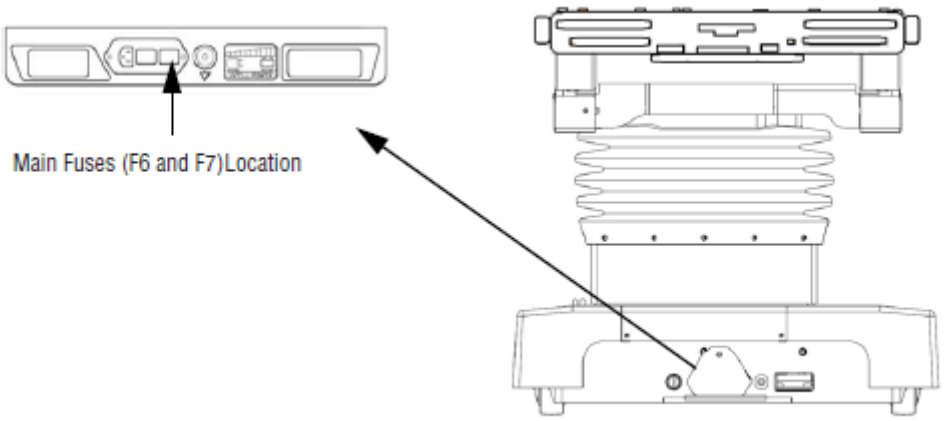

Figure 6-2. Installing or Replacing Main Fuses F6 and F7

6.7 Connecting Table to AC Power

Required line power for surgical table is 100-240 Vac, single-phase, 50/60 Hz, 4.0 Amp.

Each table is shipped from the factory configured to the electrical requirement specified on the factory order. If this electrical configuration needs to be changed in the field, consult STERIS for the needed procedure and required materials.

NOTE: Before connecting the table to your ac power system, ensure table is marked for your power system (100, 120, 220 or 230/240 Vac).

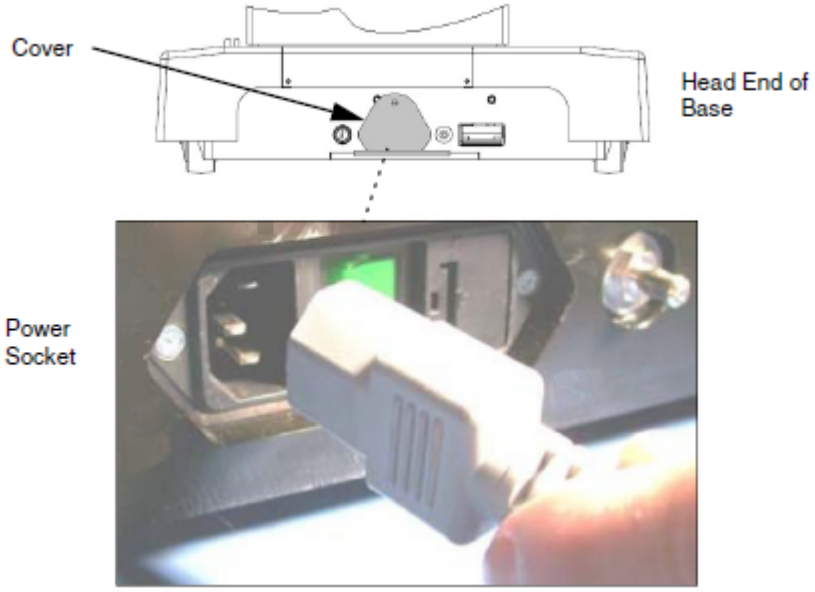

Figure 6-3. Connecting Table to Facility Power (Typical)

1. **Route power cord to prevent tripping hazard.**
2. **Plug power cord into appropriate socket on table base (see *Figure 6-3*).**

3. **Plug power cord into appropriate facility outlet.**

   NOTE: When integrity of external protective earth conductor arrangement is in doubt, use battery power only.

4. **Turn Main Power Switch to ON.**

   Switch turns Green and plug symbol on INTELLIPOWER® LED Display lights.

NOTE: A green Main Power Switch indicates facility power is available to the table. A lighted plug symbol on the LED Display indicates the batteries are charging.

6.8 Connecting Universal Hand Control

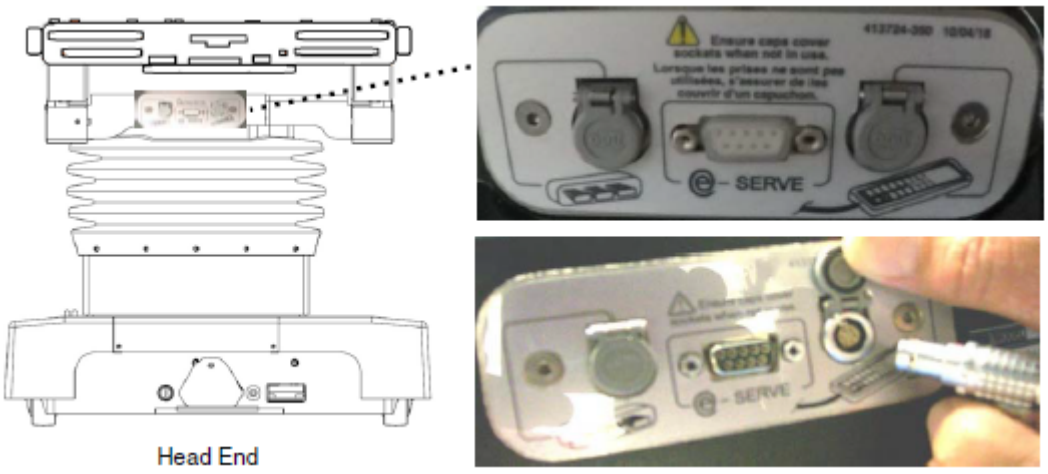

Figure 6-4. Connecting Universal Hand Control

Connect the Universal Hand Control as follows:

1. **Remove universal hand control from package.**
2. **Lift hinged plastic protective cover for handle connection socket.**
3. **Align red mark (or arrow) on hand control plug with red mark on connection socket.**
4. **Push hand control plug into table socket until a "click" is heard.**
5. **With the table at the precise location, use the Floor Lock button (on the hand control) to lock the table in place.**
6. **Place hand control on table side rail.**

6.9 Connecting Optional Foot Control

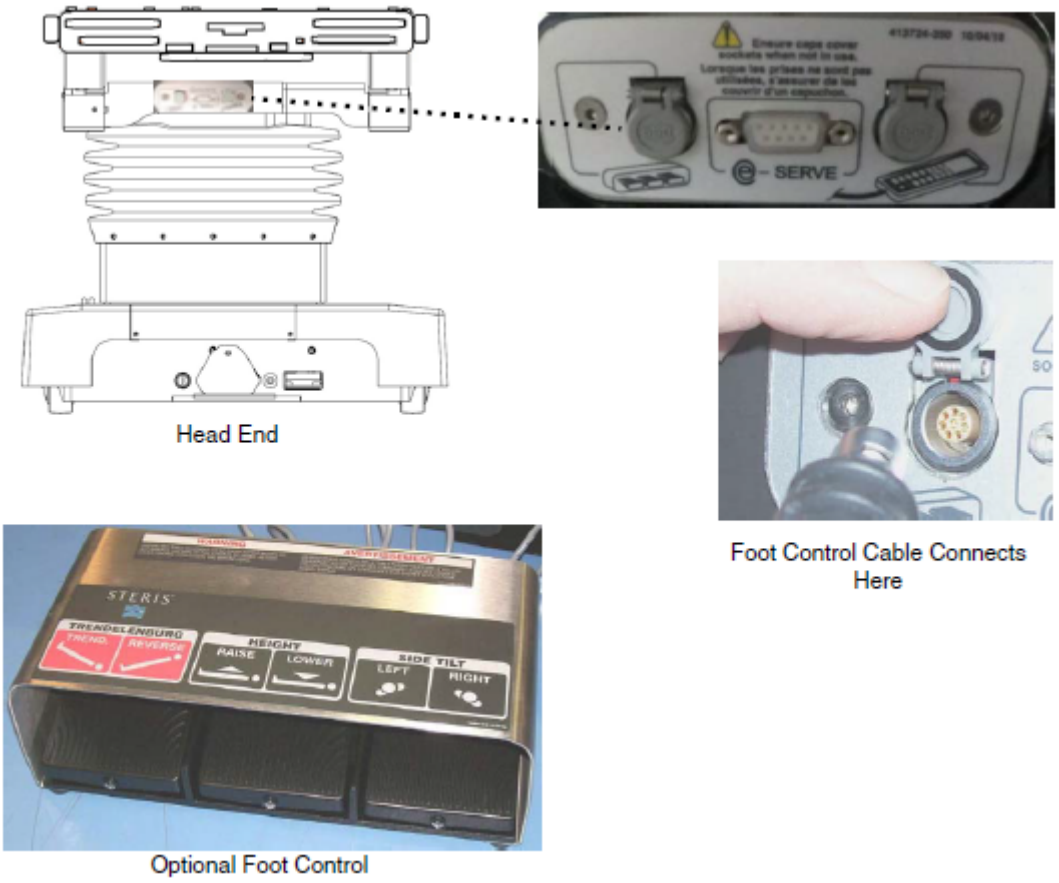

Figure 6-5. Connecting Optional Foot Control

The optional foot control allows operator to control HEIGHT, TREND and TILT movements.

Install the option as follows:

1. **Remove foot control from package.**
2. **Lift hinged plastic protective cover for foot control connection socket.**
3. **Align red mark (or arrow) on foot control plug with red mark on associated connection socket.**
4. **Push foot control plug into table socket until a "click" is heard.**
5. **Place foot control where it cannot be damaged.**

6.10 Installing/Removing Table Pads

Conductive Tabletop Pads will be of one of two varieties (related to tabletop attachment):

- **Pads backed with hook-and-loop fastener strips, which mate to hook-and-loop strips on the tabletop.**
- **Pads with mushroom-type fasteners (non hook-and-loop)**

To install a table pad, place pad in position and firmly press associated fasteners together.

To remove a table pad, gently peel or lift the pad, as applicable, to free it from the tabletop.

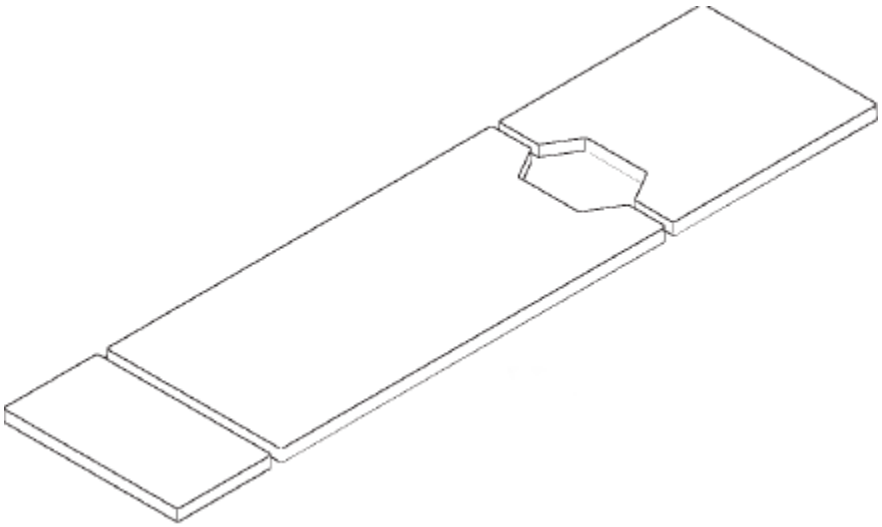

Figure 6-6. Tabletop Pads

6.11 Installing/Removing X-Ray Top

The table is designed to enable installation of an X-ray top to allow use of X-ray cassette film. Attach the four-part X-ray top as follows:

1. **Carefully remove X-ray top sections from packing container.**
2. **Remove pads from tabletop.**
3. **Position X-ray top section over corresponding tabletop section, aligning posts to mounting holes.**

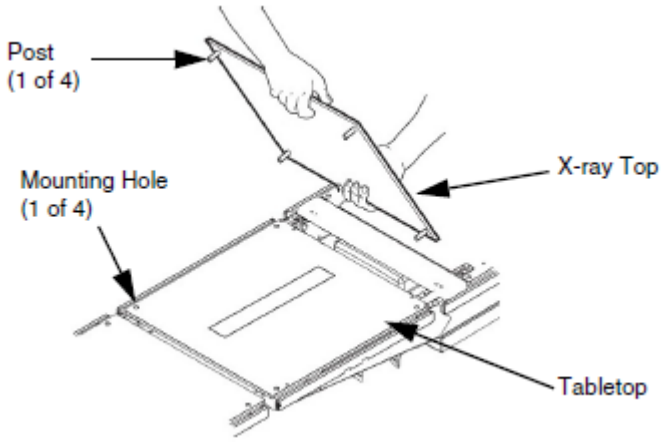

Figure 6-7. Aligning X-ray Top Posts to Mounting Holes

4. **Press down on X-ray top section until a "click" is heard.**

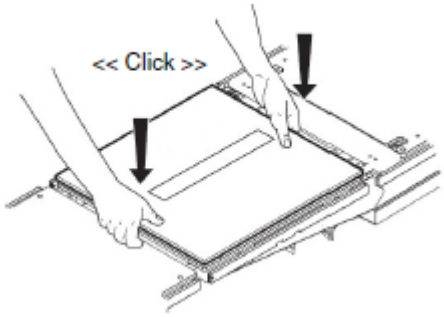

Figure 6-8. Snapping X-ray Top Into Position

5. **Ensure X-ray top sections are securely mounted by gently pulling up on section.**
6. **Reinstall tabletop pads.**
7. **Remove and store X-ray top by reversing above steps.**

6.12 Accessories/Side Rails

The standard STERIS permanently attached 3/8" wide x 1-1/8" tall (9.5 x 28.6 mm) side rails allow for the use of many standard surgery table attachments and accessories. The rails consist of one rail mounted to each side of each tabletop main section.

IMPORTANT: *Regarding Side Rail Loading*

Side Rail loading (with exception of Dual-Articulating Headrest rails) has been evaluated through cantilevered testing to support 200 ft-lb (271 Nm) maximum. Any additional loading needs to consider table stability.

Dual-articulating headrest side rails support 100 ft-lbs. (135 Nm) maximum. The headrest end rail supports 50 ft-lbs. (67 Nm) maximum.

For complete information on accessory options, consult STERIS.

WARNING-PERSONAL INJURY HAZARD:

⚠ When installing any table accessory, check for correct attachment and tighten securely (if appropriate). Do not use a worn or damaged accessory. Before using any accessory, ensure it has been installed properly.

WARNING-INSTABILITY HAZARD:

⚠ Possible patient or user injury, as well as table or accessory failure, may result from using STERIS table accessories for other than their stated purpose or from using accessories manufactured and sold by other companies on STERIS surgical tables.

Table 6-1. STERIS 5095 General Surgical Table Specific Accessories*

Accessory	Equipment Number
Foot Control	BF586
Hand Control	BF319

Table 6-1. STERIS 5095 General Surgical Table Specific Accessories* (continued)

Accessory	Equipment Number
TLT Table Pads (Complete Set) Hook-and-Loop	BF58 (2) BF230 (3) BF291 (4)
PRS Table Pads (Complete Set) Mushroom-Type	BF272 (2) BF279 (3) BF245 (4)
X-Ray Top (Complete Set) Hook-and-Loop	BF101
X-Ray Top (Complete Set) Mushroom Type	BF193

* Contact STERIS for ordering information.

STERIS®

Installing/Removing Dual-Articulating Head Rest

7.1 Installing/Removing Dual-Articulating Head Rest

WARNING-PERSONAL INJURY HAZARD:

Dual-articulating headrest side rails support 100 ft-lbs. (135 Nm) maximum. The headrest end rail supports 50 ft-lbs. (67 Nm) maximum. Exceeding these limits could result in injury.

7.2 Installing the Head Rest

1. Fully loosen both locking thumbscrews located at bottom edge of back frame.

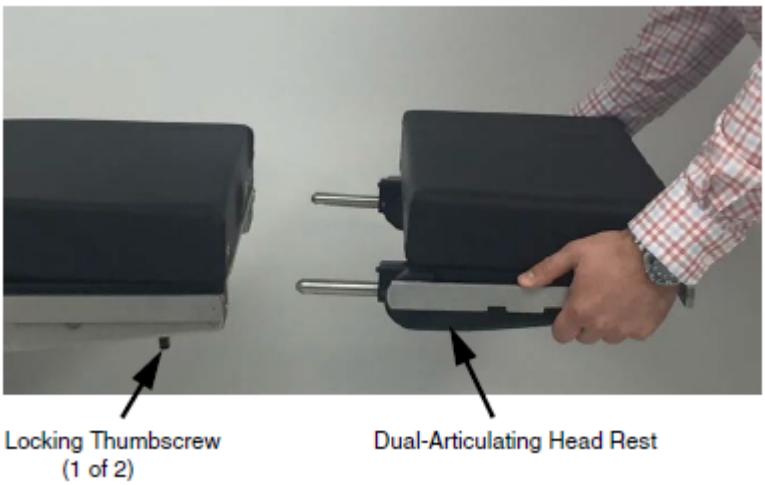

Figure 7-1. Installing the Head Rest

2. Insert both head rest installation rods into back frame until fully engaged.

   NOTE: The head rest should slide easily into back frame. Do not force.

3. Fully tighten both locking thumbscrews to lock head rest in place.
4. Pull head rest (both sides) to ensure correct installation.

7.3 Removing the Head Rest

1. Fully loosen both locking thumbscrews located at bottom edge of back frame.
2. Pull head rest free of table.

STERIS®

Installing/Removing Leg Section

8.1 Installing the Leg Section

WARNING- PERSONAL INJURY HAZARD:

⚠ Do not exceed 350 lbs. (159 kg) on the leg section.

NOTE: The table is equipped with Hi-Lock locking mechanism enabling quick and easy removal/installation of the leg section with a safety lock feature.

1. **Position table top seat section to horizontal by pressing LEG UP button on hand control.**

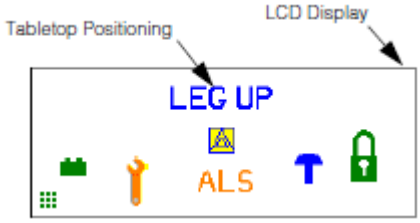

Figure 8-1. Universal Hand Control,LCD Screen

2. **With top seat section of table horizontal, insert both leg section installation rods into seat frame until fully engaged. Listen for "click" sound to indicate correct installation (see *Figure 8-2*).**

   NOTE: The leg section should slide easily into the back frame (seat section). Do not force.

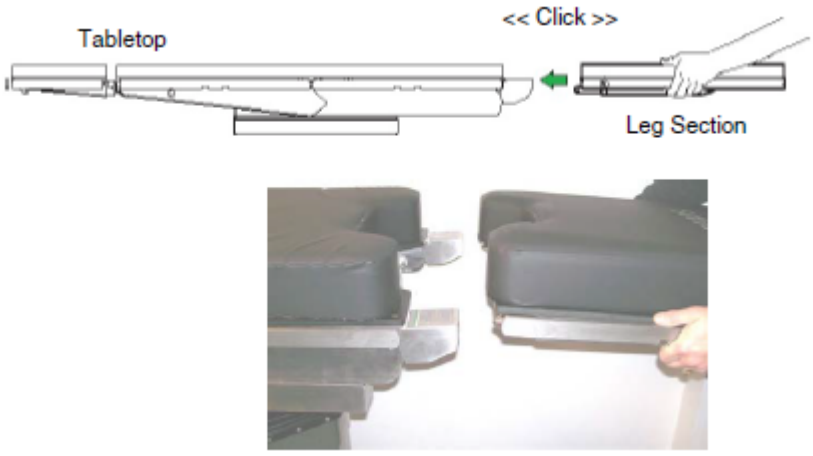

Figure 8-2. Attaching Leg Section

3. **Pull leg section (both sides) to ensure correct installation. Leg section should remain firmly in place.**

8.2 Removing the Leg Section

The surgical table leg section is designed to be easily removed (Hi-Lock locking mechanism) to enable procedures requiring optional leg supports. The leg section can be removed while a patient is on the table. Remove the leg section as follows:

WARNING-PERSONAL INJURY HAZARD:

- Do not remove table leg section if patient is not properly positioned. Patient's torso and buttocks must be firmly held in place by table back and seat sections and legs supported by leg supports.
- Do not exceed 350 lbs. (159kg) on the leg section.

1. **Using hand control, level leg section (bring to horizontal).**
2. **While holding leg frame, squeeze both handles and simultaneously pull backward (see *Figure 8-3*).**
3. **Safely store leg section to prevent damage.**

   NOTE: When leg section is removed from the table, the LCD Display shows LEG OUT if the LEG UP or LEG DOWN hand control pushbutton is pressed.

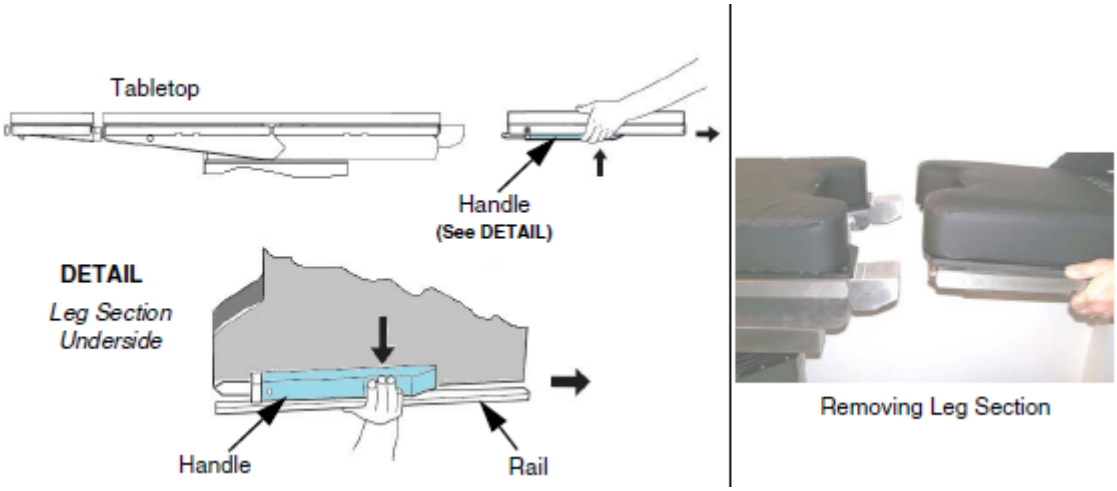

Figure 8-3. Leg Section Removal

Surgical Table Operation

9.1 Warnings and Cautions

WARNING-PERSONAL INJURY HAZARD:



- The table is not to be used to transport patients. With exception of slight repositioning, as detailed in the operating instructions, never disengage floor locks when patient is on table. Failure to heed this warning can result in injury to both the patient and the operating room staff.
- Healthcare professionals must ensure that patients are positioned and monitored so as to prevent compromising respiration, nerve pathways or circulation.
- Patient must be secured to the table in accordance with recommended positioning practices. Unanticipated patient or table movement could result in death or serious injury.
- If the integrity of the external protective earth conductor installation or arrangement is in doubt, operate the table from its internal power source.

WARNING-PERSONAL INJURY AND/OR EQUIPMENT DAMAGE HAZARD:



- Table is factory set to operate at a certain voltage. Use of any other power supply could result in serious personal injury or table damage.
- Use of this table in the presence of flammable anesthetics could result in serious personal injury or table damage.

WARNING-PERSONAL INJURY AND/OR EQUIPMENT DAMAGE HAZARD:

- Placing a patient whose weight exceeds maximum patient weight limit (patient in normal or reverse orientation) of the following can result in injury to the patient and the operating room staff, and serious equipment damage.
- Do not use this table for patients exceeding the maximum patient weight of:



- 1200 lbs. (544 kg) Load, Normal and Reverse Patient Position; raise or lower only (no tabletop articulation or slide).
- 900 lbs. (408 kg) Load, Normal and Reverse Patient Position; raise or lower; includes all tabletop articulation except tabletop slide.
- 600 lbs. (272 kg) Load, Normal Patient Position; raise or lower; includes all tabletop articulation and full tabletop slide.

WARNING-TIPPING HAZARD:

- **Do not place patient on the table unless floor locks are engaged.**
- **Do not use this table for patients exceeding the maximum patient weight:**
- 1200 lbs. (544 kg) Load, Normal and Reverse Patient Position; without tabletop articulation or slide.
- 900 lbs. (408 kg) Load, Normal and Reverse Patient Position; includes all tabletop articulation except tabletop slide.
- 600 lbs. (272 kg) Load, Normal Patient Position; includes all tabletop articulation and full tabletop slide.
- **Center tabletop over column before applying chest compressions**

WARNING-PERSONAL INJURY HAZARD:

- Do not exceed 350 lbs. (159 kg) on the leg section.
- Dual-articulating headrest side rails support 100 ft-lbs. (135 Nm) maximum. The headrest end rail supports 50 ft-lbs. (67 Nm) maximum.

Exceeding these limits could result in injury.

Before using the table, either in regard to operating it or performing maintenance, in addition to the above warnings and cautions presented in this topic, ensure familiarity with all safety precautions and pinch point locations.

9.2 Operating the Surgical Table

1. **Review Pinch Point Warnings content.**
2. **For instructions concerning one or more of the following tasks, refer to the section entitled, Before using the Table, and perform necessary tasks, for example, installing the head rest and the leg section.**
   - **Grounding**
   - **Installing Battery Fuse**
   - **Connecting Table to AC Power**
   - **Connecting Universal Hand Control**
   - **Connecting Optional Foot Control**
   - **Installing/Removing Multi-Position Head Rest**
   - **Installing/Removing Leg Section**
   - **Installing/Removing Table Pads**
   - **Installing/Removing X-Ray Top**
   - **Accessories/Side Rails**
3. **Charge the battery if needed, as indicated in the associated topic.**
4. **Verify power cord is plugged into both the facility outlet and table receptacle and Main Power Switch is in ON position.**

   NOTE: For cord connected tables, the power cord attachment plug is to be used as a disconnect from facility power. The surgical table must be positioned so plug is not difficult to reach.
5. **For optimum performance, before attempting to operate table, allow table to reach room temperature.**

6. Using hand control, position tabletop to LEVEL.

   NOTE: When the Hand Control and Foot Control are both installed, Hand Control has priority.

7. Manually adjust the head rest, if applicable, as described in steps *Step a* through *Step b*.

   NOTE: The head rest may be positioned UP or DOWN 90° from horizontal (level).

   NOTE: Refer to the section on Installing/Removing Head Rest, if needed.

   a. While holding head rest securely in one hand, pull release handle (spring loaded) located under right side of head rest and tilt head rest to desired angle (level in this case).

   b. Release handle to lock head rest at desired angle. Move headrest slightly until ratchet mechanism locks headrest in position.

      NOTE: An audible "CLICK" is heard when the headrest locks into position.

   c. While holding head rest securely in one hand, pull the spring-loaded release handle (located under left side of head rest) and raise head board to desired angle.

   d. Release handle to lock head board in place.

      NOTE: Locking is immediate when handle is released. There is no audible click.

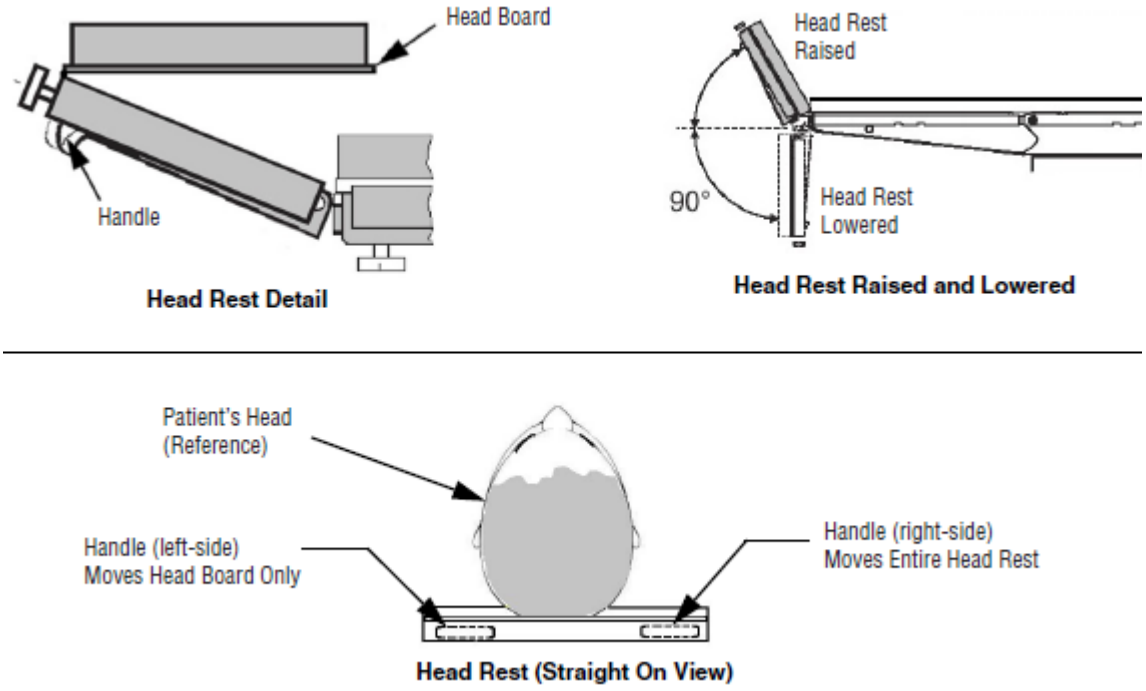

Figure 9-1. Adjusting Dual-Articulating Head Rest

8. Engage floor locks by pressing hand control LOCK button.

   Before placing patient on table, ensure patient does not exceed maximum patient weight of:

   - 1200lbs. (544 kg) Load, Normal and Reverse Patient Position; raise or lower only (no tabletop articulation or slide).
   - 900lbs. (408 kg) Load, Normal and Reverse Patient Position; raise or lower; includes all tabletop articulation except tabletop slide.

- **600lbs. (272 kg) Load, Normal Patient Position; raise or lower; includes all tabletop articulation and full tabletop slide.**

  After verifying patient weight does not exceed table weight capacity, transfer or position patient and ensure patient is properly restrained. If needed, refer to the section on Patient Safety Straps.

NOTE: A patient grounding post/potential equalization terminal (male connector, DIN 42801) is provided. The mating female connector for patient grounding is not furnished by STERIS.

9.3 Introduction

NOTE: Failure to comply with the safety information contained within can result in injuries, damage to the equipment or damage to other property.

The Universal Hand Control provides a simple user interface to manipulate all Surgical Table articulations. Uses other than those described are not recommended and may not be safe.

The Universal Hand Control is to be operated only by users who have been successfully trained on operation of the applicable Surgical Table in conjunction with the Universal Hand Control. Please contact STERIS for appropriate guidance, in-service and training.

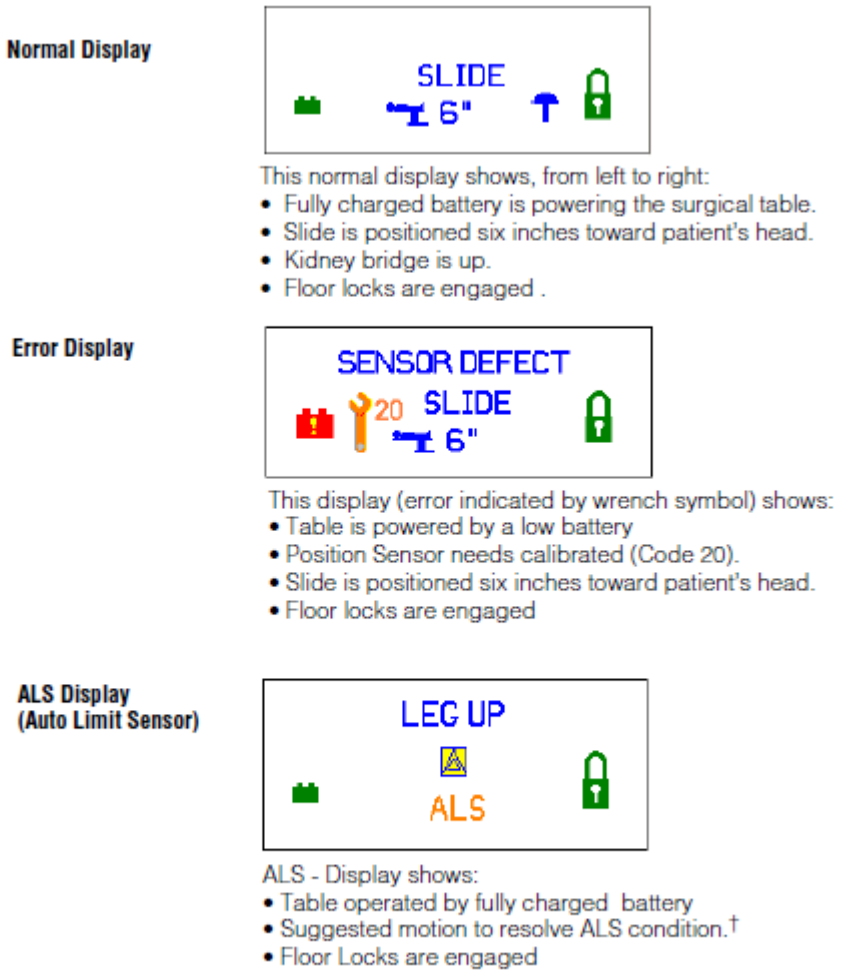

Figure 9-2. Universal Hand Control Screen

NOTE: *If needed, refer to* ***Hand Control Symbols*** *section for symbol definitions.*

9.4 Operating the Universal Hand Control

Use the Universal Hand Control as follows:

1. **Connect Universal Hand Control to Surgical Table and press any key except STOP to activate table.**
2. **Check the Hand Control display to see which table it is configured to control, for example:**

4095 MODE ENABLEDUNIVERSAL HAND CONTROL	**or**	**5095 MODE ENABLEDUNIVERSAL HAND CONTROL**

3. **If Surgical Table matches compatibility mode shown, the display shows a connectivity message:**

   Example: HCV 1.22 TCV 2.13

   4095 TABLE CONNECTED

   - **HCV (Hand Control software Version)**
   - **TCV (Table Control software Version)**
   - **Type of surgical table connected**

4. **After a brief time, the display changes to show symbols representing state of table. When a key is pressed, a table articulation is commanded. This is normal operating mode. The surgical Table is now ready for use with the Universal Hand Control.**
5. **If Surgical Table does not match compatibility mode, the Universal Hand Control displays a screen permitting user to select the correct compatibility mode (the mode that matches table type detected during power on).**

   Example: a 5095 Surgical Table is detected but the Universal Hand Control is configured for a different table.

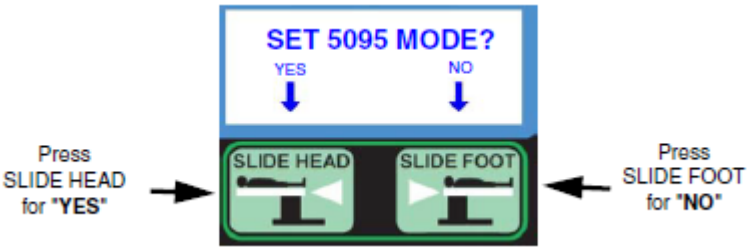

Figure 9-3. Prompt to Select Correct Compatibility Mode

   - **Pressing SLIDE HEAD (YES) changes the compatibility, in this example, to the 5095 mode.**
   - **Pressing SLIDE FOOT (NO) keeps original compatibility mode of Universal Hand Control and begins table operation. Subsequent behavior depends upon which table is actually connected to Hand Control.**

6. **After user selects compatibility mode for Universal Hand Control by pressing SLIDE HEAD (YES), the display instructs user to restart table.**

   After Universal Hand Control is powered off and on, it functions according to description beginning in Step 2.

   NOTE: A restart is only required after changing compatibility modes.

RESTART THE TABLE

PRESS STOP AND ON TO RESTART

Refer to *Table 9-1* for situation when Universal Hand Control and Surgical Table Compatibility Modes do not match.

Table 9-1. Universal Hand Control and Surgical Table Compatibility Mismatch

	Scenario*	Corrective Action
1	Table is not in Beach Chair Mode, but Control and Table function correctly. When Beach Chair Mode (option) is engaged, Control displays BEACH CHAIR MODE ERROR (see **BEACH CHAIR MODE** Section).	**1. Power table off by pressing STOP button.** **2. Power table on by pressing any key except STOP.** **3. Select [correct table] Mode when prompted.**
2	When table is powered on, user is prompted to select [applicable] Compatibility Mode.	
3	Control display shows **BAD VERSION** message but otherwise Control and Table function correctly. When table is powered on, user is prompted to select [applicable] Compatibility Mode.	
4	Control and Table shut down after approximately seven seconds.	1. Power table on by pressing any key except STOP. 2. Select [correct table] Mode when prompted.
	NOTE: * For scenarios 1, 2, and 3, The **Refer to Instructions** symbol (at right) appears in lower right corner of display.	

9.5 Message Display With Numeric Error Codes

Universal Hand Control displays numeric error messages beside **Wrench** symbol when V2 table control board is installed in a Surgical Table. Numeric error codes persist during a key press for articulation related errors. Numeric error codes persist until the Surgical Table is powered off for errors related to system failures. *Figure 9-4* shows a typical error code display. *Table 9-2* lists error codes (wrench codes) and their meanings.



Figure 9-4. Example of Error Code Display - Error Code 20 Shown

Table 9-2. Display Screen Numeric Error Codes

Wrench #	Condition	Action
2	ALARM - Commands received from both Primary and Auxiliary Hand Controls.	Only one Hand Control (Primary or Auxiliary) is required to perform user guided task.
7	ALARM - SLIDE blocked.	Press STOP. Slide function is blocked causing an over-voltage situation, address obstruction.
9	ALARM - Table batteries depleted.	Plug table into facility power.

Table 9-2. Display Screen Numeric Error Codes (continued)

Wrench #	Condition	Action
10	ALARM - Floor locks not detected.	Floor Lock pressure switch failure. Call STERIS.
11	ALARM - Controller button depressed too long.	If no button found depressed, press STOP to stop any table movement and call STERIS. If button was pressed for more than one minute, release button and repress for less than one minute.
12	ALARM - TILT sensor failure.	Combination movements (Level, Flex and Reflex) are not allowed. Call STERIS Service.
13	ALARM - TRENDELENBURG sensor failure.	Combination movements (Level, Flex and Reflex) are not allowed. Call STERIS Service.
14	ALARM - BACK sensor failure.	Combination movements (Level, Flex and Reflex) are not allowed. Call STERIS Service.
15	ALARM - LEG sensor failure.	Combination movements (Level, Flex and Reflex) are not allowed. Call STERIS Service.
17	ALARM - HEIGHT sensor failure.	Combination movements (Level, Flex and Reflex) are not allowed.
18	ALARM - SLIDE sensor failure.	Combination movements (Level, Flex and Reflex) are not allowed. Call STERIS Service. SLIDE toward head and floor unlock/lock commands are not allowed if SLIDE sensor is defective. Call STERIS Service.
20	ALARM - Sensor needs recalibration.	Combination movements (Level, Flex and Reflex) are not allowed. Call STERIS Service.
21	ALARM - Battery fuse missing or bad connection.	Protection fuse not installed or has failed. Call STERIS Service to ensure fuse is installed or to replace fuse.
22	ALARM - Battery voltage imbalance greater than 0.6.	Call STERIS Service.
23	ALARM - Charging circuit failure (Power Supply or P6 cable or main board defect).	Call STERIS Service.
24	ALARM - Thermal protection of Power Supply activated.	Call STERIS Service.
25	ALARM - Hydraulics failure. No pump motor feedback (Power Supply or P6 cable or main board defect).	Hydraulic pump failure. Call STERIS Service.
26	ALARM - Hydraulics failure. No valve feedback.	Hydraulic valve failure. Call STERIS Service.

Table 9-2. Display Screen Numeric Error Codes (continued)

Wrench #	Condition	Action
27	ALARM - No slide motor feedback.	Call STERIS Service.
28	ALARM - Continuous slide motor feedback.	Call STERIS Service.
29	ALARM - Slide command not received.	Call STERIS Service.
30	ALARM - Continuous slide command received.	Call STERIS Service.
31	ALARM - Hand Control software not compatible with master control software.	Call STERIS Service.
32	ALARM - Solid state device controlling power to hydraulic pump is ON continuously.	Table turns OFF 10 seconds after message is displayed. Call STERIS Service.
33	ALARM - Battery voltage supplied to master control PCB is greater than 31 V.	Table turns OFF 10 seconds after message is displayed. Call STERIS Service.
34	ALARM - Solid state device controlling any hydraulic solenoid valve is ON continuously.	Table turns OFF 10 seconds after message is displayed. Call STERIS Service.
37	ALARM - Table operating more than 30 minutes while unlocked or 10 hours when locked.	Restart table if required by pressing a command button.
42	ALARM - Control PC Board battery failure (not installed, bad or bad contact).	Call STERIS Service. Have Control PC Board lithium real time clock battery replaced.
47	ALARM - Communication loss between primary hand control and master control PC Board.	Ensure primary hand control is plugged into table. Call STERIS Service.

9.6 Power-On Error Messages

As the Surgical Table powers-on, the following compatibility errors may occur:

- **TABLE NOT CONNECTED - The Universal Hand Control did not detect a connection to a Surgical Table.**
- **TABLE NOT SUPPORTED - The Universal Hand Control is connected to a Surgical Table that is not supported.**
- **BEACH CHAIR MODE ERROR This message appears when Universal Hand Control cannot cancel the optional Beach Chair Mode [if applicable]. See Beach Chair Mode Section of this publication for more information.**

9.7 Reverse Patient Orientation

WARNING- PERSONAL INJURY HAZARD:

- Do not exceed 350 lbs. (159 kg) on the leg section.
- Dual-articulating headrest side rails support 100 ft-lbs. (135 Nm) maximum. The headrest end rail supports 50 ft-lbs. (67 Nm) maximum.

Exceeding these limits could result in injury.

Reverse Patient Orientation, Definition: The headrest is attached to the leg section and the patient oriented with head on headrest.

Some surgeries (for example, shoulder injuries) require the patient to be in reverse positioning and the table to be operated in a reverse configuration. Press **Reverse Orientation** button on hand control and hold for two seconds, Yellow LED should light beside graphic representation of Reverse Orientation. Press **Reverse Orientation** button again and hold for two seconds to cancel Reverse Orientation function and green LED lights beside graphic representation of Normal Orientation.

When **Reverse Orientation** button is pressed, all other hand control commands (through the control system) note the new patient head position. Trendelenburg and Lateral Tilt movements and Back and Leg Sections are automatically reversed.

IMPORTANT: *When using the* ***Reverse Orientation*** *button, note the following:*

1. ***The information displayed on the LCD is not reversed.***
2. ***When table is turned OFF, control system stores orientation status. Before any new positioning is attempted, ensure table patient configuration is correct.***
3. ***The head rest is manually adjusted and is not affected by Reverse Orientation button operation.***
4. ***FLEX and REFLEX functions are NOT available for patient safety.***
5. ***When operating in REVERSE ORIENTATION, LEVEL function does NOT operate.***
6. ***The hand control automatically deactivates upon non-use after 30 minutes if floor locks are released and 10-hours when floor locks are engaged. The hand control is reactivated by depressing ANY button other than STOP.***

9.8 Optional Foot Control Operation

The table can be operated using the optional foot control which allows operator to control HEIGHT, TREND and TILT movements. It is important to note that when using the hand control and optional foot control at the same time, the **hand control has priority**. Also, if the hand control STOP button is pressed, foot control also switches OFF. To operate the foot control:

1. **Press and release any positioning pedal (on the foot control) to switch table control ON.**

   NOTE: If the hand control is also attached, PEDAL ON appears on the LCD Display message window.
2. **Operate HEIGHT, TREND and TILT pedals as needed.**
3. **After unplugging foot control from table, put the protective cover over the connector.**

STERIS®

Backup (Override) Control System

10.1 Introduction

The table is equipped with an auxiliary control system which can be actuated at any time. This feature allows the table to continue operating in the event of primary control malfunction. A foot pump (to provide hydraulic power) and an override-hand-control are located on the right side of the table base behind a cover panel. The method of adjusting the head rest remains unchanged, as the head rest is always adjusted manually.

10.2 System Operation

To operate system, proceed as follows (see *Figure 10-1*):

1. **Flip foot pedal down.**
2. **Slide Backup Hand Control out from base.**
3. **To operate table functions, pump the foot pedal while pressing desired function button on Backup Hand Control.**

WARNING-PERSONAL INJURY AND/OR EQUIPMENT DAMAGE HAZARD:

- ALS System is not active during Backup Control. Ensure proper tabletop movements to prevent patient/staff injury and/or equipment damage.
- During Backup Control, tabletop functions are available even if table floor locks are NOT engaged. LOCK table before moving tabletop or transferring patient.

NOTE: When using the Backup (Override) Control System, note the following:

1. **For FLOOR UNLOCK and SLIDE (HEAD and FOOT) functions, it is not necessary to pump pedal.**
2. **Pressing any button on the Backup Hand Control deactivates Primary Hand Control.**
3. **When a SLIDE pushbutton is pressed, the green LED [next to the word CAUTION] should light indicating system is active.**
4. **When any tabletop function button (except SLIDE) is pressed, green LED next to USE WITH FOOT PUMP should light.**
5. **The ALS System is NOT active during Backup (Override) Control System operation.**
6. **When table is in the Backup UNLOCK configuration, tabletop functioning IS active. LOCK table before moving tabletop.**
7. **Reverse Orientation is NOT available in Backup Control operation. If patient was in reverse orientation when auxiliary control was activated, change TREND to REV. TREND, LEFT TILT to RIGHT TILT, etc.**

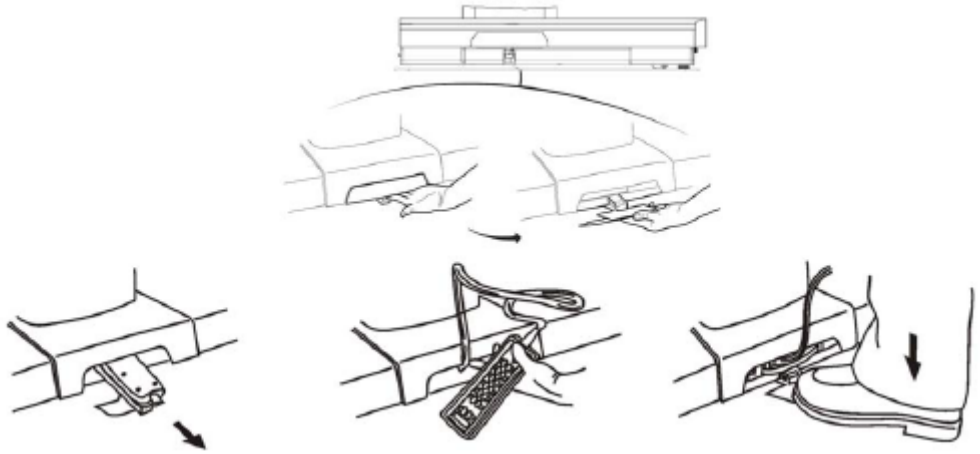

Figure 10-1. Backup (Override) Control System

10.3 Backup Hand Control Description

The Backup Hand Control pushbutton descriptions are provided below:

NOTE: Simply release the Backup Hand Control pushbutton when desired tabletop position has been reached; the table automatically stops and locks in position. Note that the **Range of Motion** section illustrates various table articulations.

SLIDE HEAD: When depressed, Zip-Slide moves tabletop toward head end. When slide returns to central ("0") position, movement stops for one second before continuing. Function powered by battery.

SLIDE FOOT: When depressed, Zip-Slide moves tabletop toward foot end. When slide returns to central ("0") position, movement stops for one second before continuing. Function powered by battery.

HEIGHT UP: When depressed and pumping simultaneously, the **entire** tabletop raises.

HEIGHT DN: When depressed and pumping simultaneously, the **entire** tabletop lowers.

TREND: When depressed and pumping simultaneously, the head end of the tabletop lowers; or, foot end raises.

REVERSE TREND: When depressed and pumping simultaneously, the head end of the tabletop raises; or, foot end lowers.

TILT LEFT: When depressed and pumping simultaneously, the tabletop rolls to the left (patient's left or viewing the table from the head end).

TILT RIGHT: When depressed and pumping simultaneously, the tabletop rolls to the right (patient's right or viewing the table from the head end).

BACK UP: When depressed and pumping simultaneously, the tabletop back section raises.

BACK DN: When depressed and pumping simultaneously, the tabletop back section lowers.

LEG UP: When depressed and pumping simultaneously, the tabletop leg section raises.

LEG DN: When depressed and pumping simultaneously, the tabletop leg section lowers.

KIDNEY UP: When depressed and pumping simultaneously, the tabletop KIDNEY Elevator raises to the maximum 4" (110 mm).

KIDNEY DN: When depressed and pumping, the tabletop Kidney Elevator Mechanism lowers.

FLOOR LOCK: When depressed and pumping simultaneously, floor locks are slowly lowered. To ensure table is correctly secured to the floor, gently push on table.

FLOOR UNLOCK: When depressed, floor locks are slowly released. To ensure floor locks are completely disengaged, gently push on table.

NOTE: When table is in the Backup FLOOR UNLOCK configuration, tabletop functioning IS active. FLOOR LOCK table before moving tabletop.

STOP: When depressed, all hand control function buttons deactivate. All functions are stopped immediately.

10.4 Return Backup Control System

When situation has been corrected and normal table operation is available, replace the Backup Control System as follows:

1. **Turn Backup Hand Control face down.**
2. **Wind cable and place under controller.**
3. **Slide controller and cord back into table base.**
4. **Fold pedal back to original position.**

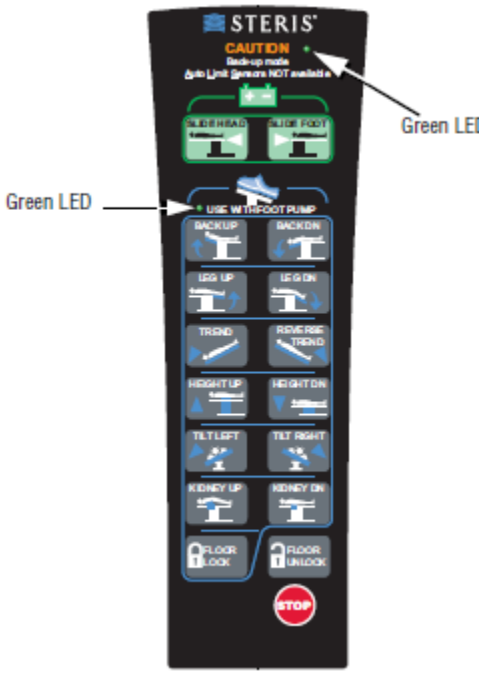

Figure 10-2. Backup (Override) Hand Control

STERIS®

Routine Maintenance

11.1 Read Before Performing Routine Maintenance

WARNING-PERSONAL INJURY AND/OR EQUIPMENT DAMAGE HAZARD:

- Repairs and adjustments to this equipment must be made only by STERIS or STERIS-trained service personnel. Maintenance performed by unqualified personnel or installation of unauthorized parts could cause personal injury, result in improper equipment performance, invalidate the warranty, or result in costly damage. Contact STERIS regarding service options.
- Regularly scheduled preventive maintenance is required for safe and reliable operation of this equipment. Contact STERIS to schedule preventive maintenance.
- Do not service or perform maintenance on equipment while in use.

The routine maintenance procedures described in this section of the manual should be performed regularly at the indicated intervals. Table usage may require more frequent maintenance than indicated. Refer to for common replacement parts and to the parts catalog for parts not listed in the table [as well as for location reference] if needed. Any maintenance procedures not included in this section should be performed only by STERIS-trained service personnel fully acquainted with the surgical table.

NOTE: Anytime table covers have been removed, the table must be resealed as noted in the section, **Sealing Table Covers**.

The following preventive maintenance advisories must be observed:

1. **Under no circumstances should this equipment be serviced without the Maintenance Manual. This (use of Maintenance Manual) also meets requirements for essential performance and compliance with electromagnetic compatibility.**
2. **The Maintenance Manual can be purchased by contacting STERIS Customer Service.**
3. **A detailed Preventive Maintenance schedule and replacement parts list can be found in the Maintenance Manual.**
4. **Preventive Maintenance is essential in keeping this equipment in optimal working condition. STERIS recommends establishing an annual maintenance agreement with STERIS service.**
5. **Customer should maintain a record of all maintenance procedures performed on the table.**
6. **If a problem associated with an Error Code occurs, refer to the "Message Display with Numeric Error Codes" topic in the section, Surgical Table Operation.**
7. **Preventive Maintenance and regular service must be performed according to the Maintenance Manual to comply with the requirements for essential performance and compliance with electromagnetic compatibility.**
8. **The Maintenance Manual describes the steps necessary for checking and replenishing the hydraulic oil.**

   NOTE: Never permit unqualified persons to service the table and Preventive Maintenance is not covered under warranty.

11.2 Bi-Weekly Maintenance

Operate the surgical table to verify all functions perform correctly. Operation must be smooth and quiet. If table operation is not smooth, have a qualified technician repair the table. Never permit inexperienced, unqualified persons to attempt to make any repairs to the table.

11.3 Monthly Maintenance

Check each surgical table caster and floor lock for any accumulated debris and clean as follows:

NOTE: Ensure Hand Control is in proper working order and good condition.

1. **Ensure floor locks are properly engaged.**
2. **Hold spray cleaner can 6-8" (152-203 mm) from caster and spray cleaning fluid liberally on the caster.**
3. **Wipe caster with a cloth, dampened with water, to remove cleaning fluid and debris. Ensure items such as suture, oils and floor wax are removed.**
4. **Perform steps 2 and 3 and for remaining three casters.**

11.4 Replacement Parts

The parts listed in this section are required for minor maintenance on the surgical table.

To order replacement parts, proceed as follows:

1. **Include part number and description listed in *Table 11-1*.**
2. **Include model and serial numbers of your equipment on your order.**
3. **Send your order directly to STERIS.**

   NOTE: For Replacement Parts, note the following:

   a. **Use only STERIS authorized parts on the equipment. Use of unauthorized parts voids the warranty.**

   b. **This table uses lead-acid batteries. Lead-acid batteries normally are subject to self-discharge and battery-life deterioration in long-term storage. Therefore, STERIS does not recommend that batteries be procured and then stored as spare parts. If batteries are procured and stored, they should be kept covered and in a cool, dry area. Stored batteries must be recharged every six months to minimize deterioration. Use a charging current commensurate with the battery amp-hour size. Charge to a floating charge voltage equivalent to 13.6-13.8 volts.**

Table 11-1. Replacement Parts

DESCRIPTION	PART NUMBER	RECOMMENDED SPARES
Hand Control Assembly	P141210773	1
Replacement Hand Control Cable	P141210807	1
Power Cord	P093909354	1
Fuse (Main), 3.0 Amp	693600038	1
Fuse (Set)	342213555	1
Batery	P764331223	N/A
* 2, 3, and 4 tabletop pads available; refer to parts catalog (Illustrated Parts Breakdown).		

Table 11-2. Replacement Parts, Pads

TLT Pads (Hook-and-Loop), 2 *	**PART NUMBER**	**RECOMMENDED SPARES**
▪ **Pad, Head Section**	P150832695	1
▪ **Pad, Back/Seat Section**	413724464	1
▪ **Pad, Leg Section**	413724465	1
PRS Pads (Mushroom-Type), 2 *	**PART NUMBER**	**RECOMMENDED SPARES**
▪ **Pad, Head Section**	P134469542	1
▪ **Pad, Back/Seat Section**	P141210677	1
▪ **Pad, Leg Section**	P134469543	1
* 2, 3, and 4 tabletop pads available; refer to parts catalog (Illustrated Parts Breakdown).		

11.5 Auto Limit Sensor (ALS) Check

WARNING-PERSONAL INJURY AND/OR EQUIPMENT DAMAGE HAZARD:



The Auto Limit Sensor (ALS) System suggested alternative tabletop movement does not take into account the type of surgery that may be in process or the environment (e.g., other equipment close by) and might not be compatible with the surgical procedure. To avoid an action that could result in death or serious injury to the patient and the operating room staff, and/or serious equipment damage, completely evaluate the feasibility of the suggestion.

The table is equipped with the Auto Limit Sensor system (ALS) which provides instant user feedback on conflicting tabletop articulations. An ALS Warning on the hand control indicates the tabletop has been ordered into a configuration or has moved into a position that may cause tabletop damage or patient injury.

To prevent a tabletop sectional conflict, or collision of tabletop with the table or floor, the ALS System immediately stops the movement in process and the ALS LED lights. The control system alerts the user to an alternative movement choice in the LCD Display.

NOTE: The ALS System suggested alternative movement is not the only movement available. Users should exercise professional judgment in determining the most desirable movement.

Test the Auto Limit Sensor system as follows:

1. **Review and follow instructions presented in the section, Before using the Table, and prepare the table for operation.**
2. **Raise tabletop to highest position possible.**
3. **Use SLIDE HEAD and move tabletop to head end limit.**
4. **Press LEG DOWN button until ALS Warning lights and tabletop motion stops. If system does not engage, stop tabletop movement before collision and call STERIS.**

11.6 LEVEL Check

Check the tabletop LEVEL function as follows:

1. **Review and follow instructions presented in , Before using the Table.**
2. **Press LEVEL pushbutton.**

   NOTE: When operating in REVERSE ORIENTATION, LEVEL function does NOT include the back section for compliance with anesthesia procedures. Ensure REV. ORIENT (reverse orientation) is not active.
3. **When depressed, tabletop is gradually returned to level or horizontal position by aligning tabletop sections in following order:**
   a. **KIDNEY Elevator and lateral tilt.**
   b. **Trendelenburg and back.**
   c. **Leg.**
4. **Use a level and ensure tabletop is level. If not, call STERIS.**

11.7 Auxiliary Control Check

Check the surgical table auxiliary control system as follows:

1. **Review and follow instructions presented in the section, Backup (Override) Control System, and prepare the table for auxiliary control system operation.**
2. **With tabletop at extreme low height, press HEIGHT UP pushbutton and pump pedal.**
3. **Ensure tabletop raises correctly. If not, call STERIS.**

Guidelines for Cleaning Surgical Tables

12.1 Introduction

This section provides information pertaining to:

- **Disinfectants**
- **Cleaning Materials**
- **Prolonging Mattress and Pad Lives**

Prior to cleaning a table or table accessories, ensure you are familiar with these three topics, additionally, it is crucial that you understand all safety and pinch point content..

12.2 Disinfectants

Guidelines

The user must follow the requirements of the national committee responsible for hygiene and disinfection when cleaning surgical tables. Disinfectants can be used in spray or wipe applications. Enzymatic cleaners should be applied with a disposable cloth and not sprayed (and thoroughly rinsed with a clean, damp, lint-free cloth to remove residue).

The user must always follow manufacturer instructions for concentrations and use of cleaning products.

Some points of importance:

- **Avoid discoloration of hand control keypad and display. Do not clean hand control with povidone-iodine solutions or allow such solutions to contact keypad and display surfaces.**
- **Ensure no excess fluids remain on pads or table top surfaces during and after cleaning.**
- **DO NOT SPRAY any cleaning product directly onto hand control or any system components. For other system components, dampen a clean, soft cloth with the cleaning solution and wring out the excess moisture.**
- **The use of H2O2 + PAA (Hydrogen Peroxide + Peracetic Acid) is strongly discouraged.**

Disinfectants Approved for Use

The following disinfectants have been approved for use. Disinfectants not listed may cause discoloration or deterioration of pad surface. If these recommended cleaning products are not available in your area, use a neutral disinfectant or a disinfectant with a sodium hypochlorite solution (0.1% or 1000 parts per million available chlorine).

- **Coverage® Plus Germicidal Surface Wipes Disinfecting/Deodorizing/Cleaning Wipes**
- **Quaternary Ammonium Compound (Quats) with Ethanol solvent**
- **Quaternary Ammonium Compound (Quats) with Isopropyl Alcohol (IPA) solvent**
- **Quaternary Ammonium Compound (Quats) with IPA + 2-Butoxyethanol solvent**
- **Quaternary Ammonium Compound (Quats) + Biguanide**
- **H2O2 (Hydrogen Peroxide)**
- **Neutral Cleaners**

12.3 Cleaning Materials

Have the following on hand for use in conjunction with the cleaning procedures presented in this document:

- **Several clean, dry lint-free cloths.**
- **Container of clean water.**

- **Approved cleaning and disinfecting solutions (prepared as directed on product labels).**

12.4 Prolonging Mattress and Pad Lives

To ensure prolonged use of STERIS mattresses and pads, abide by following:

1. **Inspect mattress prior to and/or after use to check for mattress integrity.**
2. **Follow cleaning frequency per facility protocol; however, clean all stains promptly.**
3. **Use hospital-grade low-level disinfectant cleaning agent appropriate for soft materials.**
4. **For special considerations such as large volume blood spills, contamination or exposure to high risk tissue and fluids or C. difficile, non-porous mattresses and pads may be cleaned using a sodium hypochlorite solution as per guidelines recommended by the CDC.**
5. **Dilute all cleaners, disinfectants and germicides in accordance with manufacturers' instructions.**
6. **Use a soft sponge, cloth or wipe to clean, avoiding hard bristle or abrasive brushes.**
7. **Allow adequate drying time before returning mattress to table or accessory surface and placing into service.**
8. **Avoid applying strong adhesive tape directly to mattress surface, as pulling and tearing may affect integrity of mattress material.**
9. **Some cleaning agents leave a residue which can build up over time. Depending on cleaning agent, it may be necessary to rinse and wipe clean with a slightly damp cloth.**
10. **Some procedures performed on table mattresses or pads may involve excessive fluid exposure. Be sure to drape accordingly.**
11. **The Vent flap tag is an integral part of the mattress, use care to avoid pulling, tearing, ripping or cutting the tag.**
12. **Wash mattresses and pads by hand only, never machine wash or machine dry.**
13. **Never clean mattresses or pads with harsh cleaners or solvents that include moderate to high concentrations of alcohol.**
14. **Never use staining [or color stripping] chemicals, iodophor type disinfectants (such as Betadine), or improperly diluted bleach; these can affect fabric finish, color, and possibly weaken the fabric.**
15. **Never use undiluted or improperly diluted bleach or concentrated cleaning agents.**
16. **Do not allow any cleaning agent to remain in contact with fabric for a prolonged time or beyond cleaning agent manufacturer s recommendations.**
17. **Ensure to adequately rinse cleaning agents and disinfectants from fabric.**

Instructions for Cleaning Surgical Tables

13.1 Introduction

This section provides cleaning and disinfecting instructions for the tasks presented in *Table 13-1*.

Prior to cleaning or disinfecting a table or a table accessory. ensure you are familiar with the following:

Section1, Safety Precautions and Pinch Points

Section6.2.2, Disinfectants

Section6.2.3, Cleaning Materials

Section6.2.4, Prolonging Mattress and Pad Lives

Table 13-1. Table Cleaning and Disinfection Tasks and Frequencies

Frequency	Cleaning / Disinfecting Task (Numbers refer to Section)					
Section	Gross-Soils *6.3.2*	Table Top & Pads *6.3.3*	Lower Surfaces, Yoke, Shrouds, Base *6.3.4*	Hand Con-trol *6.3.5*	Casters &Floor Locks *6.3.6*	Areas Exposed by Articula-tion *6.3.7*
After Each Use & End-of-Day	X	X	X	X		
Weekly	X	X	X	X	X	X

WARNING-INFECTION HAZARD:

- To protect against aerosols being reflected from potentially contaminated surfaces, wear rubber or plastic gloves, masks and eye protection, and follow OSHA blood-borne pathogens standards when cleaning.
- When cleaning/disinfecting table, do not use alcohol as it does not have sufficient cleaning/disinfection properties.

WARNING-PERSONAL INJURY HAZARD:

When cleaning/disinfecting table, do not use phenolics, which may cause patient skin burns if inadequately rinsed off, or alcohol, which does not have sufficient cleaning/disinfection properties.

CAUTION- POSSIBLE EQUIPMENT DAMAGE:

- When cleaning/disinfecting table, thoroughly read the cleaning fluid directions for use and follow all directions and cautions as shown.
- Cleaning procedures requiring articulation of the table should be performed only by persons familiar with table operation.
- Do not spray cleaning fluid into electric receptacles and avoid spraying directly on emergency backup buttons or into clearance space. Spray or drippage may settle onto electric circuits inside table causing corrosion and loss of function.
- After performing cleaning procedures, ensure pads, tabletop and X-ray tops are completely dry before reinstalling. Moisture trapped between pads and X-ray tops may contribute to equipment damage, such as X-ray top warpage.

13.2 Removing Gross Soils (After each use and weekly)

IMPORTANT: *Prior to cleaning, ensure familiarity with Section1, Safety Precautions and Pinch Points.*

NOTE: Ensure protective covers are installed over receptacles.

1. **Remove gross soil with a disposable cloth**
2. **Place used cloth in an appropriate biohazardous waste disposal container.**

13.3 Cleaning Tabletop and Pads (After each use and weekly)

IMPORTANT: *Prior to cleaning, ensure familiarity with Section1, Safety Precautions and Pinch Points.*

NOTE: Ensure protective covers are installed over receptacles.

1. **Articulate tabletop to level and place at comfortable working height.**
2. **Gently "peel" pad away from tabletop fastening strips and place on another table or flat surface.**
3. **Hold can 6-8" (152-203 mm) from surface and spray cleaning fluid liberally on top and sides of pads or wipe with a clean cloth dampened with cleaning solution. (It is recommended to clean only one pad at a time.) Carefully avoid any pad seams.**
4. **Wipe dampened surfaces with a clean, lint-free cloth dampened with water to remove cleaning fluid (dampening cloth minimizes streaking).**
5. **Wipe cleaned surfaces again with clean, damp, lint-free cloth to remove residue.**
6. **Wipe cleaned surfaces again with clean, dry, lint-free cloth to remove all moisture.**
7. **Repeat Steps *Step 2* -*Step 4* for other pads.**
8. **Repeat Steps *Step 3*-*Step 6* for tabletop surfaces exposed when pads are removed.**
9. **Thoroughly dry bottom of pads and tabletop surfaces.**
10. **Place pads back onto tabletop by aligning with sides of table and pressing into place on fastening strips.**

13.4 Cleaning Lower Surfaces, Yoke, Shrouds and Base (After each use and weekly)

IMPORTANT: *Prior to cleaning, ensure familiarity with Section1, Safety Precautions and Pinch Points.*

Use the following steps to clean surfaces on the underside of the table, yoke, shrouds and base. Before cleaning, ensure all connectors are covered.

1. **Raise table to maximum height to access lower surfaces.**

2. **Keep all connectors free of cleaning agents; ensure all connectors are covered.**
3. **Hold can of spray cleaning fluid 6-8" (152-203 mm) from surface of area to be cleaned.**
4. **Spray cleaning fluid liberally on area to be cleaned.**
5. **Wipe sprayed surfaces with a clean, lint-free cloth dampened with water to remove cleaning fluid. Note that dampening the cloth minimizes streaking.**
6. **Wipe cleaned surfaces again with a clean, damp, lint-free cloth to remove residue.**

13.5 Cleaning the Hand Control (After each use and weekly)

IMPORTANT: *Prior to cleaning, ensure familiarity with Section1, Safety Precautions and Pinch Points.*

NOTE: Do NOT immerse hand control in liquid.

1. **Turn hand control OFF.**
2. **Hold can of spray cleaning fluid 6-8" (152-203 mm) from surface and spray cleaning fluid liberally on hand control.**
3. **Wipe sprayed surfaces with a clean, lint-free cloth dampened with water to remove cleaning fluid. Note that dampening cloth minimizes streaking.**

13.6 Cleaning Casters and Floor Locks (Weekly)

IMPORTANT: *Prior to cleaning, ensure familiarity with Section1, Safety Precautions and Pinch Points.*

1. **Check table casters and floor locks for accumulated debris.**
2. **Ensure floor locks are properly engaged (raising casters off floor).**
3. **Hold can of spray cleaning fluid 6-8" (152-203 mm) from caster.**
4. **Spray cleaning fluid liberally on caster.**
5. **Wipe caster with a cloth, dampened with water, to remove cleaning fluid and debris.**
6. **Repeat for the remaining three casters.**

13.7 Cleaning Areas Exposed by Articulation (Weekly)

IMPORTANT: *Prior to cleaning, ensure familiarity with Section1, Safety Precautions and Pinch Points.*

This procedure requires articulating the table through as many positions as needed to expose all articulation-related surfaces to allow for cleaning.

1. **Using Hand Control, articulate table to expose surface to be cleaned.**
2. **Hold can of spray cleaning fluid 6-8" (152-203 mm) from surface to be cleaned and spray cleaning fluid liberally on surface.**
3. **Wipe sprayed surfaces with a clean, lint-free cloth, dampened with water to remove cleaning fluid.**
4. **Wipe cleaned surfaces again with a clean, damp, lint-free cloth to remove any remaining residue.**
5. **Ensure cleaned area is dry.**
6. **Repeat steps *Step 1* through *Step 5* for other articulation-related surfaces.**
7. **If table will not be used, turn hand control OFF when finished with cleaning procedure.**

STERIS®

Battery Charging

14.1 The Charging Display

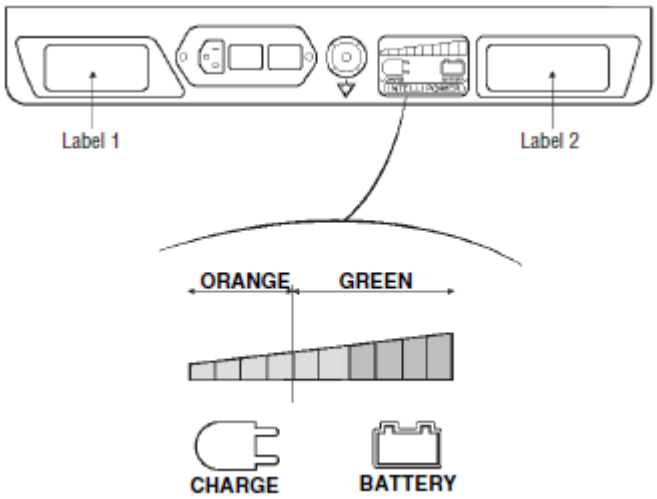

Figure 14-1. INTELLIPOWER Panel LED Display

14.2 What You Should Know Before Charging the Batteries

The surgical table is equipped with INTELLIPOWER® dual power system. The table is powered either by facility power or by internal batteries. If table is to be operated on battery power, note the following:

IMPORTANT: *Batteries are recharged automatically as long as the Main Power Switch is set to* ***ON*** *and the ac supply power is connected to the table. The PLUG icon appears on Power Panel LED Display indicating ac power and the diode bar indicates battery condition:*

- **When table is plugged into facility ac and Main Power Switch is ON, the diode bar shows battery charge state. This battery charge state is also indicated by icon on primary hand control.**
- **When table is on battery power and primary hand control is active (on), the diode bar shows battery charge state. This battery charge state is also indicated by icon on primary hand control .**

Batteries require recharging on a periodic basis depending on frequency of table usage. Low or discharged battery conditions are indicated by HALF FILLED or EMPTY BATTERY icon on the Hand Control and some or all green diode bars on Power Panel LED Display are OFF.

NOTE: Maximum life expectancy for a battery that has a history of proper care and charging is 4 years. More frequent battery replacement will be required if charging recommendations are not followed.

NOTE: Fully charged batteries enable between 100 and 150 procedures (approximately three weeks) without recharging. Note the charge/discharge icon on the LED Display of Power Panel.

NOTE: When two green diode bars on Power Panel LED Display are OFF, batteries are half charged. This level of power enables normal table operation without damaging the batteries. However, when the last green diode bar is OFF, batteries must be recharged without further delay or battery damage occurs. If all diodes are OFF, batteries are completely drained and the table can only operate on main facility power.

Lead acid batteries last longer if they are not permitted to fully discharge. Therefore, to obtain the longest life and capacity from the table batteries, always connect ac power cord to table base and plug into an appropriate ac receptacle as often as possible, and as long as possible, with the Main Power Switch set to **ON**. If this is not always possible, recharge batteries at the following times:

- **Every 15 days when the table is in normal service; more often if usage demands.**
- **Whenever HALF FILLED BATTERY icon appears on LCD Status Control Indicator.**
- **If the table remains in extended storage for longer than three months; batteries must be charged every three months.**

NOTE: If the sealed lead-acid gel electrolyte-type batteries do not charge, check for the following:

1. **Battery fuse is blown - replace the fuse per the Installing Battery Fuse section.**
2. **Ac power cord is defective - replace if necessary.**
3. **Main Power Switch is OFF (not illuminated).**
4. **Charger Circuit is not operating.**

14.3 Battery Charging Procedure

WARNING-PERSONAL INJURY AND/OR EQUIPMENT DAMAGE HAZARD:

Repairs and adjustments to this equipment must be made only by STERIS or STERIS-trained service personnel. Maintenance performed by unqualified personnel or installation of unauthorized parts could cause personal injury, result in improper equipment performance, invalidate the warranty, or result in costly damage. Contact STERIS regarding service options.

WARNING-TRIPPING HAZARD:

Route the power cord to the receptacle to minimize being tripped over by personnel in the area.

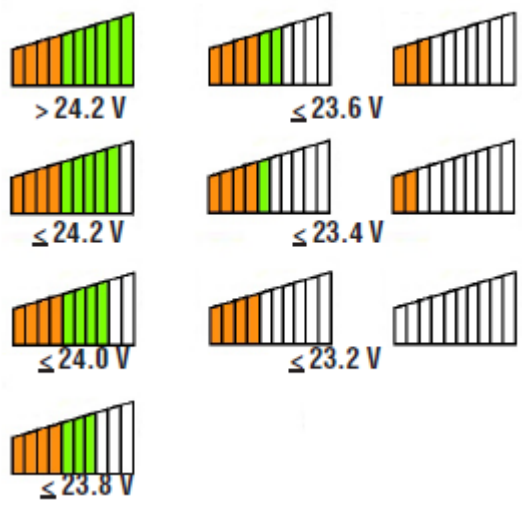

Figure 14-2. LED Relation to Battery Voltage

Recharge batteries as follows:

1. Connect ac power cord to table base and plug into an appropriate ac receptacle.
2. Turn Main Power Switch to ON.
3. Allow approximately 12 hours for full battery charge.
4. Verify FILLED BATTERY icon on hand control. Disconnect ac power.

STERIS®

Sealing Table Covers

15.1 Sealing Introduction

Whenever the Table Column cover assembly and/or Table Base cover are removed and then returned, the covers need sealed to prevent fluid intrusion to meet IPX4 requirements. Seal the covers as follows:

NOTE: Remove all old sealant and clean all mating parts before reapplying the silicone sealant. Use RTV 123 Black Silicone Sealant (R005300-568).

15.2 Two-Part Base Cover (Stainless Steel)

NOTE: To aid in loosening RTV between stainless-steel base covers for future procedures, spray Dry Lubricant Spray NG 202 (P752870-091) along the front base shroud edge that contacts the RTV before applying the RTV.

1. **Apply 1/4 x 3/4" closed cell foam tape (R007200-964) to top of mounting brackets (see *Figure 15-1*). Do not apply tape to portion of table base where plastic cover touches base (see *Figure 15-2*).**



Figure 15-1. Apply Tape to Mounting Bracket

2. **Install base cover. Ensure base cover sits flush on base (see *Figure 15-2*) at base cover insert opening.**



Figure 15-2. Ensure Base Cover Sits Flush on Base at Insert Opening

3. **Seal mating areas between front and rear base covers as shown in *Figure 15-3*.**

   NOTE: Ensure RTV is applied to both left and right sides of base covers before assembly.

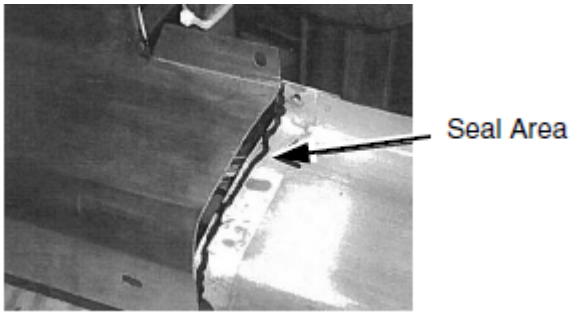

Figure 15-3. Seal Mating Areas Between Front and Rear Base Covers

4. Apply RTV to bottom of each V-shaped cut-out around interface with column covers (see *Figure 15-4*).

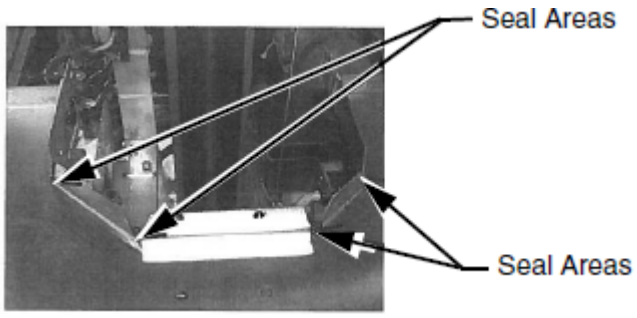

Figure 15-4. Apply RTV to V-Shaped Cut-Outs

5. Seal area where power supply inlet is exposed through base (see *Figure 15-5*).



Figure 15-5. Seal Area Around Power Inlet

6. Seal around entire perimeter between upper plastic column covers and column ensuring to fill entire gap as shown in *Figure 15-6*. Smooth out RTV as much as possible.

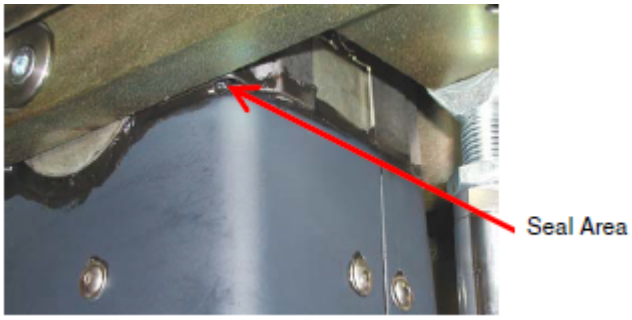

Figure 15-6. Seal Around Upper Plastic Covers and Column

7. Seal along both seams of upper plastic column covers as shown in *Figure 15-7*.



Figure 15-7. Seal Along Both Seams of Upper Plastic Column Covers

8. Install lower (inner) column cover around column.
9. Snap halves together and fasten using previously removed screw. Repeat for all column covers.
10. Secure upper (outer) cover to bracket using six existing fasteners.
11. Secure lower cover to base using four existing fasteners.
12. Secure base cover to base using screw and spacer.
13. Ensure telescoping column covers move smoothly and do not separate during operation.
14. After applying RTV, remove any excess sealant using an alcohol dampened rag.
15. Allow sufficient cure time as recommended by the RTV manufacturer before returning table for use.

15.3 One-Part Base Cover (Plastic)

1. Seal area where power supply inlet is exposed through base.
2. Install base cover insert and fasten to base cover (see *Figure 15-8*).



Figure 15-8. Install Base Cover Insert and Attach to Base Cover

3. Apply RTV to seam between base cover insert and base cover (see *Figure 15-9*).



Figure 15-9. Seal Seam Between Base Cover Insert and Base Cover

4. Apply RTV around base perimeter where column shrouds attach.
5. Seal around entire perimeter between upper plastic column covers and column ensuring to fill entire gap. Smooth out RTV as much as possible.
6. Seal along both seams of upper plastic column covers as shown in illustration.
7. After applying RTV, remove any excess sealant using an alcohol dampened rag.
8. Allow sufficient cure time as recommended by the RTV manufacturer before returning table for use.

Appendix A - EMC Compliance

16.1 EMC COMPLIANCE TECHNICAL DATA

The surgical table is designed for most surgical procedures with maximum radiological access without patient reversing. The Customer (or user) should ensure the table, and associated components, are used in an electromagnetic environment specified in *Table 16-1* through *Table 16-4*.

NOTE: Review all EMC safety precautions listed below, before operating the surgical table.

CAUTION- POSSIBLE EQUIPMENT DAMAGE:

- Appropriate components of this surgical table have been tested and found in compliance with IEC 60601-1-2: Edition 4 2014-02, Medical Electrical Equipment - Part 1; General Requirements for Safety; Electromagnetic Compatibility (EMC). There is, however, a potential for electromagnetic or other interference between this equipment and other devices. Should user experience interference, relocate this device or minimize the use of the affected equipment while this device is in operation.
- Surgical table operation may be temporarily affected if portable or mobile RF communications equipment is used in close proximity.
- Medical Electrical Equipment needs special precautions regarding EMC. Put table into service according to the EMC information provided in this manual.
- Possible EMC increased EMISSIONS or decreased IMMUNITY. Do not use accessories or replacement parts not listed in the Operator or Maintenance Manuals.
- Surgical table operation may be affected if used adjacent to or stacked with other equipment. If adjacent or stacked use is needed, ensure table operates properly in this configuration.

Table 16-1. Guidance and Manufacturer s Declaration Electromagnetic Emissions For All Equipment and Systems (per IEC 60601-2 Clause 6.8.3.201 a 3 Table 201)

The surgical table and related components are intended for use in the electromagnetic environment specified below. The Customer or the user should ensure the surgical table is used in such an environment.		
Emissions test	**Compliance**	**Electromagnetic environment guidance**
RF emissionsCISPR 11	Group 1	The surgical table uses RF energy only for its internal function. Therefore, its RF emissions are very low and are not likely to cause any interference in nearby electronic equipment.
RF emissionsCISPR 11	Class A	The surgical table is suitable for use in all establishments, other than domestic and those directly connected to the public low-voltage power supply network that supplies buildings used for domestic purposes.
Harmonic emissionsIEC 61000-3-2	Class A	
Voltage fluctuations/flicker emissions IEC 61000-3-3	Complies	

NOTE: The emissions characteristics of this equipment make it suitable for use in industrial areas and hospitals (CISPR 11 Class A). If it is used in a residential environment (for which CISPR 11 Class B is required) this equipment might not offer adequate protection to radio frequency communication services. The user might need to take mitigation measures, such as relocating or re-orienting the equipment.

Table 16-2. Guidance and Manufacturer s Declaration Electromagnetic Immunity For All Equipmentand Systems (per IEC 60601-2 Clause 6.8.3.201 a 6 Table 202)

<table>
<tr><td colspan="4">The surgical table and related components are intended for use in the electromagnetic environment specified below. The Customer or the user should ensure the surgical table is used in such an environment.</td></tr>
<tr><th>Immunity test</th><th>IEC 60601 4th Edition Test Level</th><th>Compliance Level</th><th>Electromagnetic Environment Guidance</th></tr>
<tr><td rowspan="2">Electrostatic discharge (ESD) IEC 61000-4-2</td><td>±8 kV contact</td><td>±8 kV contact</td><td rowspan="2">Floors should be wood, concrete or ceramic tile. If floors are covered with synthetic material, the relative humidity should be at least 30%.</td></tr>
<tr><td>±15 kV air</td><td>±15 kV air</td></tr>
<tr><td rowspan="2">Electrical fast transient/burst IEC 61000-4-4</td><td>±2 kV for power supply lines</td><td>±2 kV for power supply lines</td><td rowspan="2">Mains power quality should be that of a typical commercial or hospital environment.</td></tr>
<tr><td>±1 kV for input/output lines</td><td>±1 kV for input/output lines</td></tr>
<tr><td rowspan="2">Surge IEC 61000-4-5</td><td>±1 kV differential Mode</td><td>±1 kV differential Mode</td><td rowspan="2">Mains power quality should be that of a typical commercial or hospital environment.</td></tr>
<tr><td>±2 kV common mode</td><td>±2 kV common mode</td></tr>
<tr><td></td><td></td><td></td><td></td></tr>
<tr><td>Voltage Dips/Dropout</td><td rowspan="3">0% UT for
0.5 cycle
@ 0, 45, 90, 135, 180, 225, 270 and 315 degrees.</td><td>>95% Dip for
0.5 Cycle</td><td rowspan="5">Mains power quality should be that of a typical commercial or hospital environment. If the user of the surgical table requires continued operation during power mains interruptions, it is recommended that the table be powered from the equipped internal battery.</td></tr>
<tr><td>IEC 61000-4-11</td><td>60% Dip for
5 Cycles</td></tr>
<tr><td></td><td>30% Dip for
25 Cycles</td></tr>
<tr><td></td><td>0% UT for 1 cycle</td><td>>95% Dip for
5 Seconds</td></tr>
<tr><td></td><td></td><td>———————————————————</td></tr>
<tr><td></td><td></td><td>0% UT for
0.5 cycle
@ 0, 45, 90, 135, 180, 225, 270 and 315 degrees.</td><td>Tested at UT = to 230V ac andUT= 100Vac, 50Hz for all test levels.</td></tr>
</table>

Table 16-2. Guidance and Manufacturer s Declaration Electromagnetic Immunity For All Equipmentand Systems (per IEC 60601-2 Clause 6.8.3.201 a 6 Table 202) (continued)

		0% UT for 1 cycle	
Power frequency (50/60 Hz) magnetic field IEC 61000-4-8	30 A/m	30 A/m	Power frequency magnetic fields should be at levels characteristic of a typical location in a typical commercial or hospital environment.
NOTE: UT is the ac mains voltage prior to application of the test level.			

Table 16-3. Guidance and Manufacturer s Declaration Electromagnetic Immunity For Equipment and Systems That Are Not Life-Supporting (per IEC 60601-2 Clause 6.8.3.201 b Table 204)

The surgical table and related components are intended for use in the electromagnetic environment specified below. The Customer or the user should ensure the surgical table is used in such an environment.			
Immunity test	**IEC 60601 Test Level**	**Compliance Level**	**Electromagnetic EnvironmentGuidance**
			Portable and mobile RF communications equipment should be separated from the surgical table, including cables, no less than the distance calculated/listed below:
			D=(3.5/V1)(Sqrt P)
			D=(12/V2)(Sqrt P)
			D=(12/E1)(Sqrt P)
Conducted RF	3 Vrms (Outside ISM)	(V1) = 3 Vrms	80 to 800 MHz
	6Vrms (In ISM Bands)	(V2) = 6 Vrms	
		(V3) = 10 Vrms	D=(23/E1)(Sqrt P)
			800 MHz to 2.7 GHz
IEC 61000-4-6	150 kHz to 80 MHz		
			where P is the max power in watts and D is the recommended separation distance in meters.
Radiated RF	3 V/m	(E1) = 3 V/m	

Table 16-3. Guidance and Manufacturer s Declaration Electromagnetic Immunity For Equipment and Systems That Are Not Life-Supporting (per IEC 60601-2 Clause 6.8.3.201 b Table 204) (continued)

IEC 61000-4-3	80 MHz to 2.7 GHz		Field strengths from fixed transmitters, as determined by an electromagnetic site survey, should be less than the compliance levels (V1 and E1).
			Interference may occur in the vicinity of equipment containing a transmitter.

Table 16-4. Recommended Separation Distances Between Portable and Mobile RF Communications Equipment and STERIS 4095 or 5095 General Surgical Tables (per IEC 60601-2 Clause 6.8.3.201 b Table 206)

The surgical table and related components are intended for use in the electromagnetic environment in which radiated RF disturbances are controlled. The Customer or the user can help prevent electromagnetic interference by maintaining a minimum distance between portable and mobile RF communications equipment (transmitters) and the surgical table as recommended below, according to the minimum output power of the communications equipment.

Rated maximum output power of transmitter W	**Separation distance according to frequency of transmitter m**		
	150 kHz to 80 MHz $d = [\frac{3.5}{3}]\sqrt{P}$	**80 MHz to 800 MHz** $d = [\frac{3.5}{3}]\sqrt{P}$	**800 MHz to 2.5 GHz** $d = [\frac{7}{3}]\sqrt{P}$
0,01	0.12	0.12	0.23
0,1	0.38	0.38	0.73
1	1.2	1.2	2.3
10	3.8	3.8	7.3
100	12	12	23

For transmitters rated at a maximum output power not listed above, the recommended separation distance d in metres (m) can be estimated using the equation applicable to the frequency of the transmitter, where P is the maximum output power rating of the transmitter in watts (W) according to the transmitter manufacturer.

NOTE: At 80 MHz and 800 MHz, the separation distance for the higher frequency range applies.

NOTE: These guidelines may not apply in all situations. Electromagnetic propagation is affected by absorption and reflection from structures, objects and people.

Recommendation regarding use of high frequency (HF) surgical equipment (per IEC 60601-2-46 3rd edition):

1. **The surgical table is intended for use with high frequency surgical equipment.**
2. **If degradation of performance is noted the HF surgical equipment leads and return plates must be reoriented to a more favorable position.**

Statement regarding X-Ray Attenuation:

The aluminum equivalence for the table top and the x-ray top is 2 millimeters.

WARNING-:

The presence of any material in the x-ray beam will introduce diffusion and scattering effects. Operators should take appropriate precautions against x-ray exposure. Material placed in the path of an x-ray beam will attenuate the x-ray intensity. The x-ray beam intensity must not exceed safe patient levels.

WARNING-:

Portable RF communications equipment (including peripherals such as antenna cables and external antennas) should be used no closer than 30 cm (12 inches) to any part of the surgical table, including cables specified by the STERIS. Otherwise, degradation of the performance of this equipment could result.

Examples of portable RF communications equipment include TETRA 400, GMRS 460, FRS 460, LTE Band 13 and 17, GSM 800/900, TETRA 800, iDEN 820, CDMA 850, LTE Band 5, GSM 1800, CDMA 1900, GSM 1900, DECT, LTE Band 1, 3, 4, 25; UMTS, Bluetooth, WLAN, 802.11 b/g/n, RFID 2450, LTE Band 7, and WLAN 802.11 a/n.

STERIS®

Appendix B - BEACH CHAIR and advanced hand control

17.1 Introduction

This section pertains to the optional beach chair and to the advanced hand control required for the option.

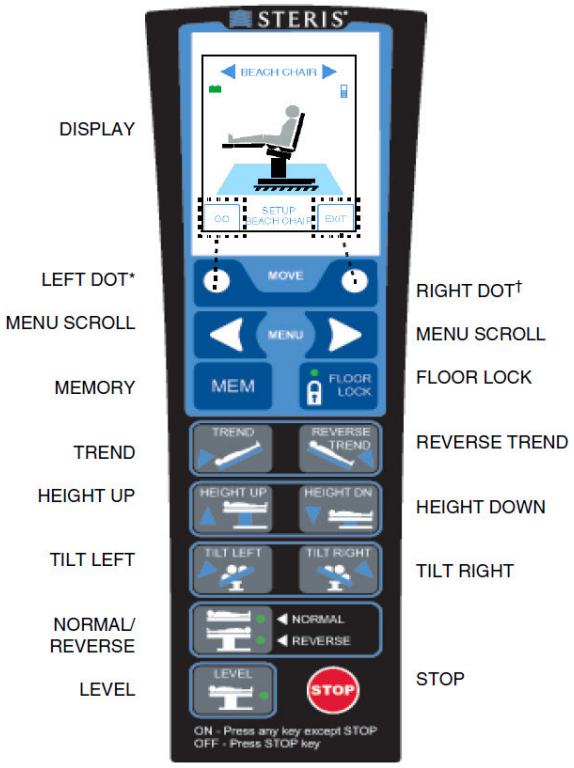

Figure 17-1. Advance Hand Control (Required for Beach Chair Mode)

*LEFT DOT — associated with lower left corner of display screen. In this figure Left Dot button is for GO.

†RIGHT DOT — associated with lower right corner of display screen. In this figure, Right Dot button is for EXIT.

17.2 Floor Locks

Understand the following points regarding floor locks.

Floor locks:

- **Cannot be disengaged unless slide is less than 2.5 (64mm) toward short end of table base.**
- **When engaged, all motions are full range.**
- **When disengaged, all motions are full range except slide, which is limited to 2.5 (64mm) of travel toward short end of table base.**

17.3 Hand Control for Beach Chair Operation

The Advanced Hand Control must be used for the beach chair option.

WARNING-PERSONAL INJURY AND/OR EQUIPMENT DAMAGE HAZARD:

The Beach Chair Mode is only operational with the STERIS Shoulder Chair (BF594) accessory that attaches (plugs in) to the Seat Section receptacles. Other Beach Chair accessories that mount to the table side rails can be used with the tables BUT not with the Beach Chair Mode.

17.4 Beach Chair Limits

WARNING-PERSONAL INJURY AND/OR EQUIPMENT DAMAGE HAZARD:

Hand Control must be attached at all times to enable Safety Stop and all modes of operation.

Beach Chair Mode places surgical table in the following target positions:

- **Target position (when GO key is pressed):**
  - **Back Section (patient s Leg Section) = -30°.**
  - **Trendelenburg = 10°.**
  - **Leg Section (patient s Back/beach chair angle = 60°) = -30°.**
- **Patient Orientation = Reverse (automatically changed).**
- **Floor Locks engaged.**

When in Beach Chair Mode, the following table section ranges are possible:

- **Tilt = full range**
- **Trendelenburg/Reverse Trendelenburg range = full range**
- **Height = full range**
- **Slide within ± 9 (229 mm) from center. However, ALS limits slide movement to prevent possible collisions.**
- **Back Section = Full range**
- **Leg Section/Receptacles = 0 to -105° from level**

17.5 Preparing for Beach Chair Mode

This topic pertains to the beach chair mode and the advanced hand control (required for this mode).

Ensure table is ready for operation in Beach Chair Mode as follows:

1. **Lock table (ensure floor locks are engaged).**
2. **Ensure Head Section is properly installed.**
3. **Unplug table from facility power to prevent trip hazard from power cord.**
4. **Verify table batteries are charged and table is ON.**
5. **Ensure Shoulder Chair (listed as Beach Chair on screen) is installed per Instructions For Use (P150832-310).**
6. **Patient is properly positioned.**
7. **Advanced Hand Control is attached to a table side rail within easy reach of operator.**

17.6 Entering Beach Chair Mode

Position surgical table into Beach Chair Mode as follows: (see)

1. **Press MEM button.**
2. **Press Left Arrow and scroll until SETUP BEACH CHAIR appears on screen.**
3. **Press and hold Left Dot (GO displays above dot) until table articulates into Beach Chair position.**
4. **Screen displays BEACH CHAIR READY when positioning is complete.**

   NOTE: If Left Dot (GO) button is released before final position is attained, table stops articulating; and then pressing GO again causes table to continue to Beach chair position.

Table is now ready for procedures requiring a Beach Chair.

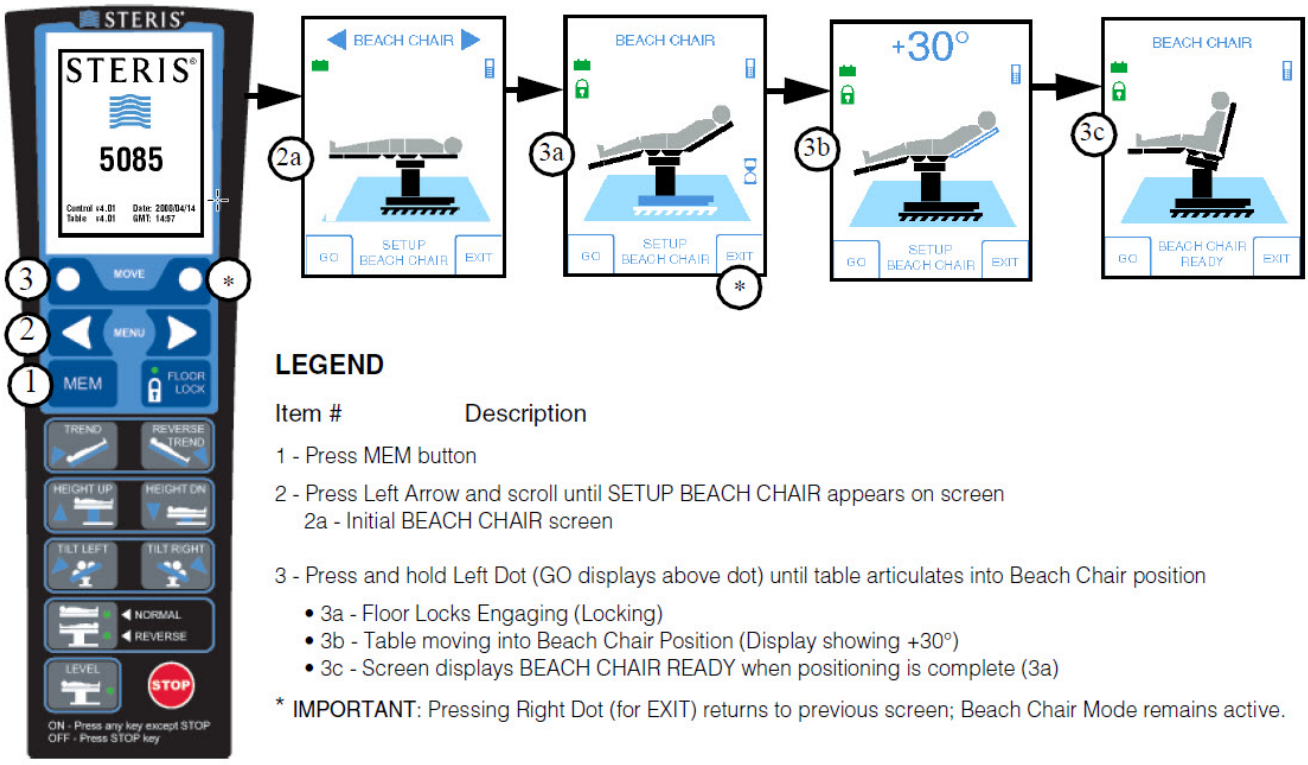

Figure 17-2. Entering Beach Chair Mode

17.7 Exiting Beach Chair Mode

Exit Beach Chair Mode as follows: (see *Figure 17-3*)

1. **Press Right Dot (EXIT displays above dot).**
2. **Press and hold LEVEL button. Table articulates to Level position.**

   When table is level, LEVEL displays momentarily on screen.
3. **Safely transfer patient from table prior to performing next step.**
4. **Press MEM button.**
5. **Press Left Arrow and scroll until EXIT BEACH CHAIR appears on screen.**
6. **Press Left Dot (YES displays above dot). Table exits Beach Chair Mode.**

7. **Remove Beach Chair (refer to Instructions For Use, P150832-310).**

   IMPORTANT: Table leg section joints are still positioned downward.

8. **Hold LEVEL button to level leg section joints.**
9. **Ensure leg section joints are level.**
10. **Reinstall table leg section.**

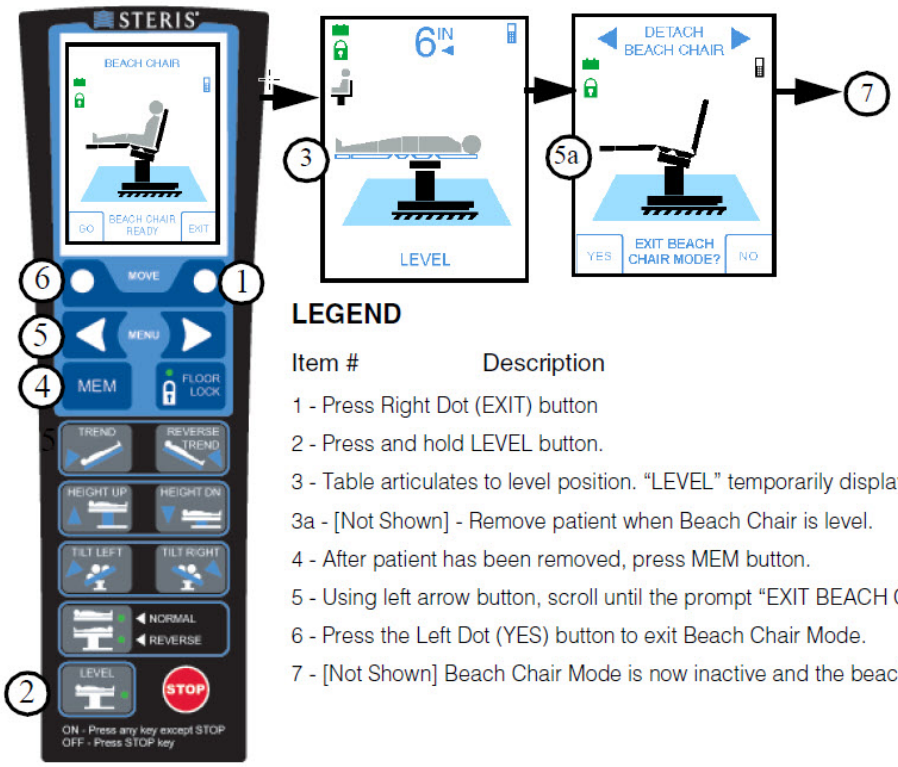

LEGEND

Item #	Description
1	Press Right Dot (EXIT) button
2	Press and hold LEVEL button.
3	Table articulates to level position. “LEVEL” temporarily displays at lower center of screen.
3a	[Not Shown] - Remove patient when Beach Chair is level.
4	After patient has been removed, press MEM button.
5	Using left arrow button, scroll until the prompt “EXIT BEACH CHAIR MODE?” is displayed (**5a**).
6	Press the Left Dot (YES) button to exit Beach Chair Mode.
7	[Not Shown] Beach Chair Mode is now inactive and the beach chair accessory can be removed.

Figure 17-3. Exiting Beach Chair Mode

17.8 Level Table Function

Ensure surgical table is ready for operation as follows:

1. **Ensure Head Section is properly installed.**
2. **Unplug table from facility power.**
3. **Verify table batteries are charged and table is ON.**
4. **If patient is on table, ensure patient is properly positioned.**
5. **Verify Advanced Hand Control is attached to a table side rail within easy reach of the operator.**
6. **Press LEVEL button to level table.**

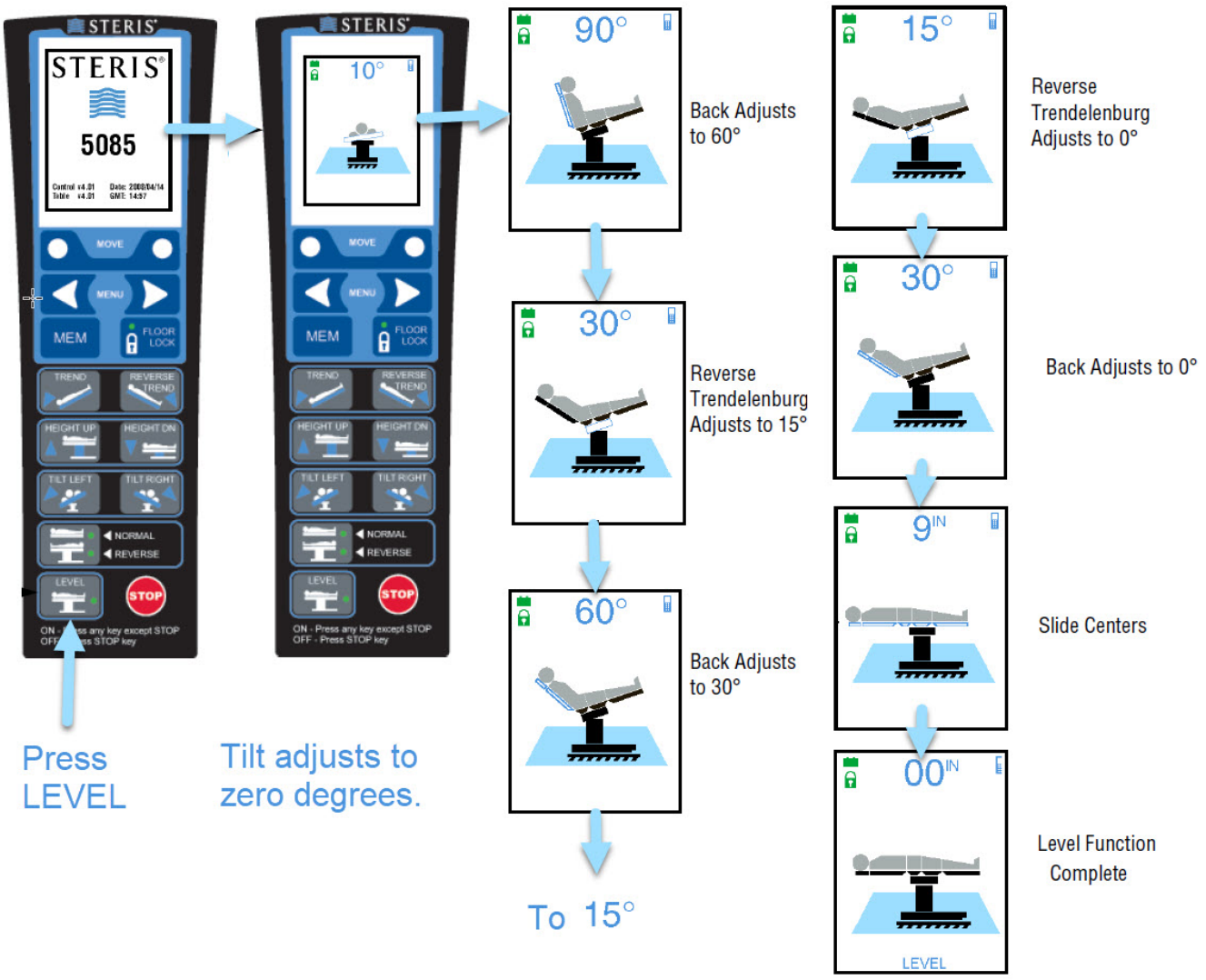

Figure 17-4. Level Table Functions (Typical)

17.9 Record Memory Modes

Ensure surgical table is ready for operation as follows:

1. **Ensure Head Section is properly installed.**
2. **Unplug table from facility power.**
3. **Verify table batteries are charged and table is ON.**
4. **If patient is on table, ensure patient is properly positioned.**
5. **Verify Advanced Hand Control is attached to a table side rail within easy reach of the operator.**
6. **Press MEM (Memory) button.**
7. **Press left memory arrow until MEM1 or MEM2 screen appears.**
8. **If recorded position does not exist:**

- move table to desired position
- press right-hand dot [REC] for record

  NOTE: Beeper sounds when record completes.

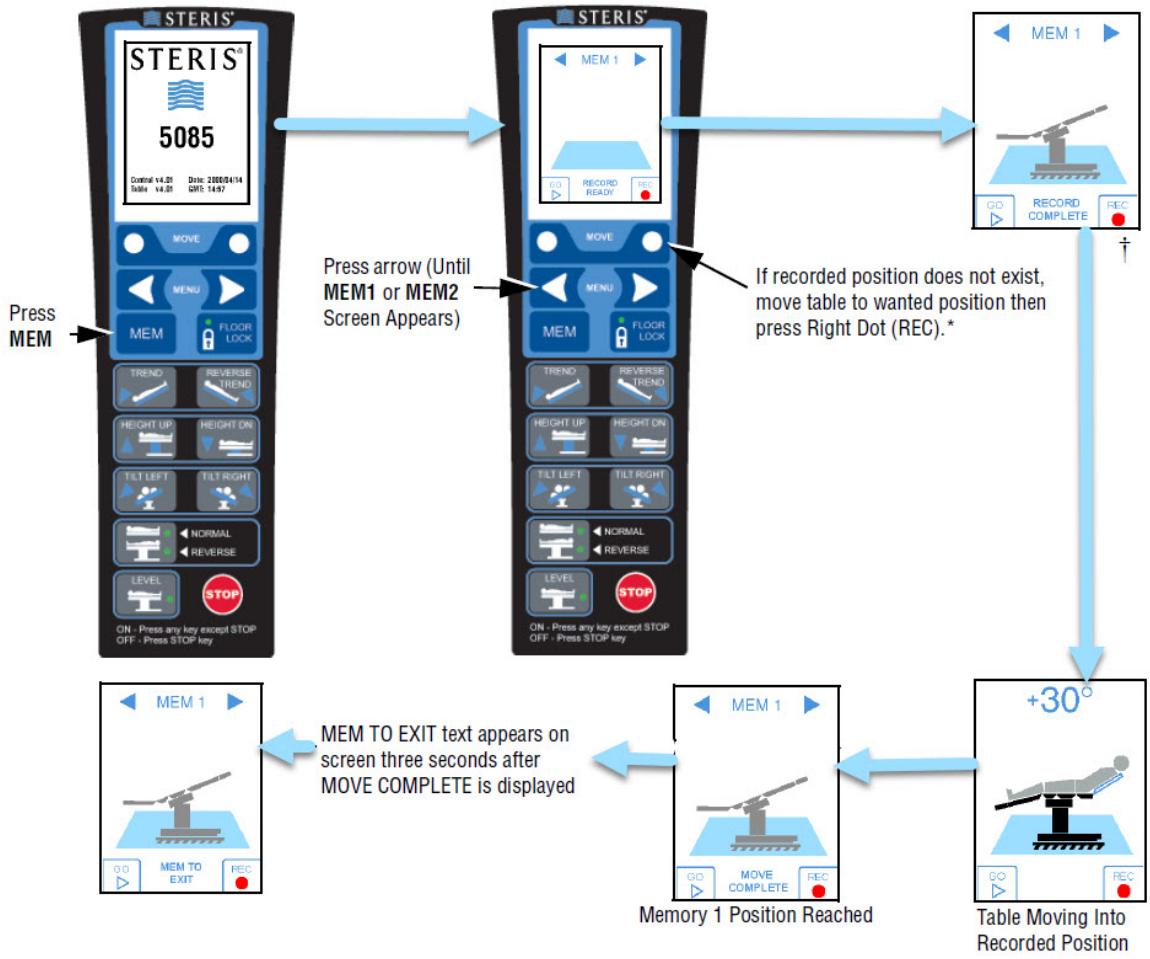

Figure 17-5. Record Memory Modes

*Once recorded position is reached, beeper beeps and table movement stops.

†Pressing and holding Left Dot (GO) moves the table to position or shows the next screen.