STERIS

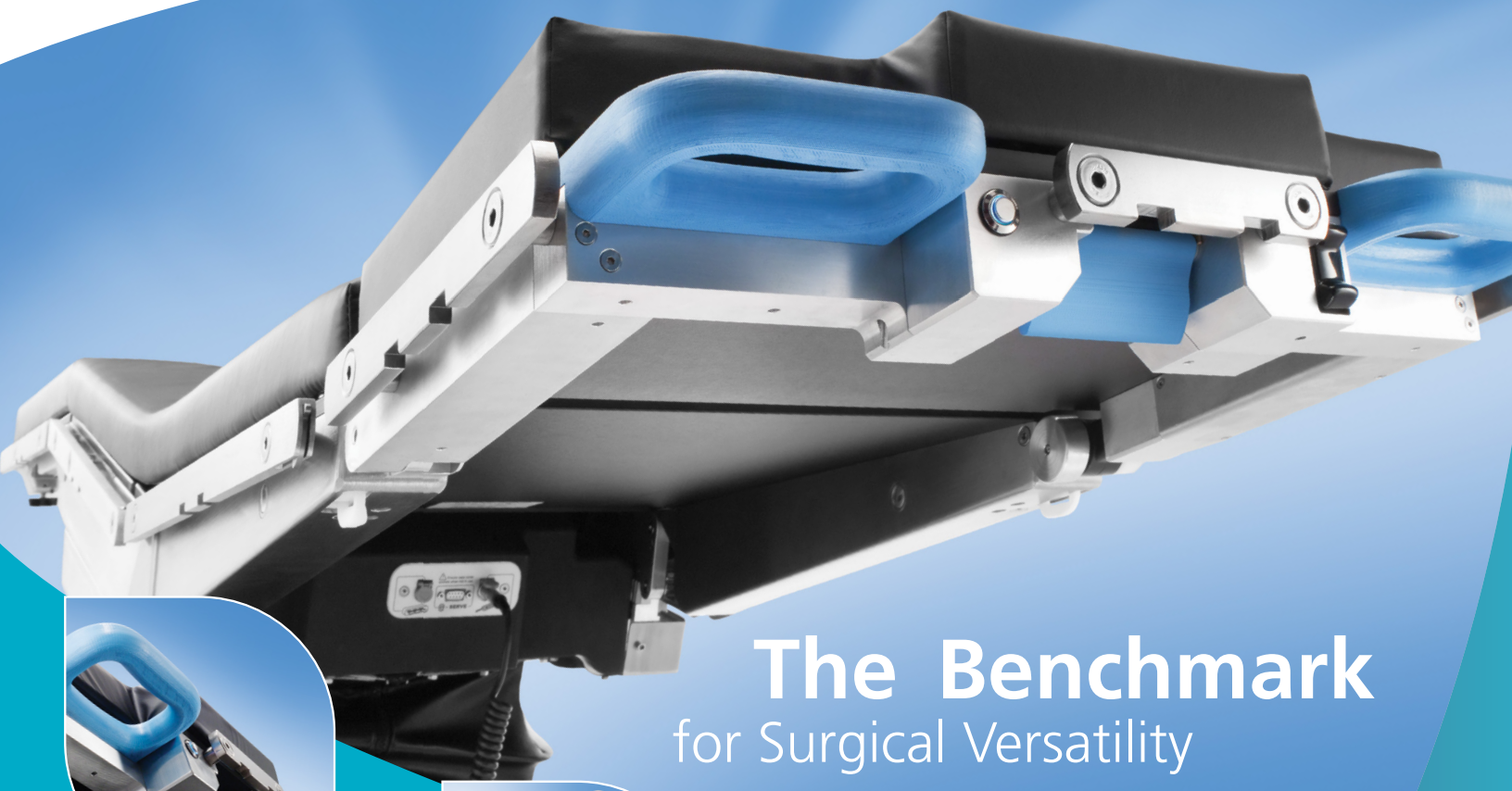

The Benchmark
for Surgical Versatility







Advancing Care
Through Purposeful Innovation

STERIS® 5085 SRT
SURGICAL TABLE

Performance and Mobility



THE ANSWER TO TODAY'S CHANGING SURGICAL ENVIRONMENT

Today's surgical environment requires a table that instantly adapts to all the versatility, handling and speed you need to provide the highest level of care. The STERIS 5085 SRT surgical table delivers with industry-leading innovations specifically designed for the OR of today and tomorrow.

A table built to do more

The STERIS 5085 SRT surgical table quickly and easily adapts to the workflow of virtually every surgical specialty. A single table accommodates the following procedures and more:

- Cardiothoracic
- Endovascular
- Bariatric
- ENT/Ophthalmology
- Orthopedic
- Gynecologic/Obstetric
- Robotic
- Urologic/Kidney



Strong, yet flexible

Higher weight capacities accommodate heavier patients and allow for more bariatric surgeries. The 5085 SRT provides an exceptionally low height for MIS, robotic and bariatric techniques without sacrificing the height needed for orthopedic and cardiac procedures.

STERIS 5085 SRT SURGICAL TABLE

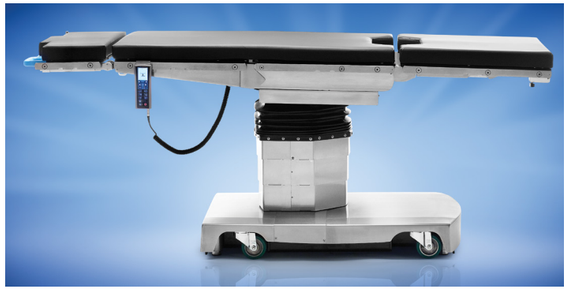

From pre-op to post-op in one table

The STERIS 5085 SRT surgical table safely and confidently slides, rotates and transports patients from pre-op, to OR, to post-op without cumbersome red-zone gurneys or trolleys.

Turn on a dime for unprecedented patient access

Use "pivot mode" to rotate a full 360° for optimal surgical flexibility.

Drive down costly non-operative time

Transfer patients to the table in the holding area and prep them for surgery while the OR is being prepared.



Better imaging means better outcomes

One of the industry's largest imaging areas permits the clear, high quality images crucial to today's MIS, cardiothoracic, orthopedic and neurosurgical procedures. Radiolucent construction provides crisp imaging, while the narrow column and generous longitudinal slide allows 100% access for the C-arm and surgical team without patient reorientation.

Intuitive controls save valuable OR time

User-friendly, data-rich hand control puts you in the driver's seat with:

- An easy-to-read LCD window that provides information on table positioning, service requirements and potential interference, making it ideal for anesthesiologists behind the drape
- Pre-programmed, backlit buttons for quick, one-touch patient positioning, even in darkened ORs
- A familiar 4-section tabletop that articulates to virtually every patient posture, giving surgeons unrestricted, time-saving access to the operative site
- LEDs highlight key buttons such as floor lock, normal and reverse patient orientation and return-to-level
- Touch pads include menu advancement, programmed positions, floor lock activation and patient positioning



STERIS 5085 SRT Surgical Table

Advancing Care Through Purposeful Innovation



Integrated Manual Override System
Easy access to backup hand control and foot pedal.





Exceptionally Low Table Height
Accommodates modern MIS, robotic and bariatric procedures.



SLIDE

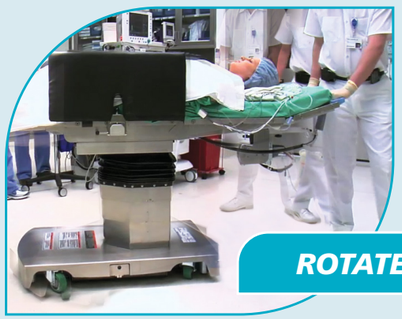

ROTATE



TRANSPORT

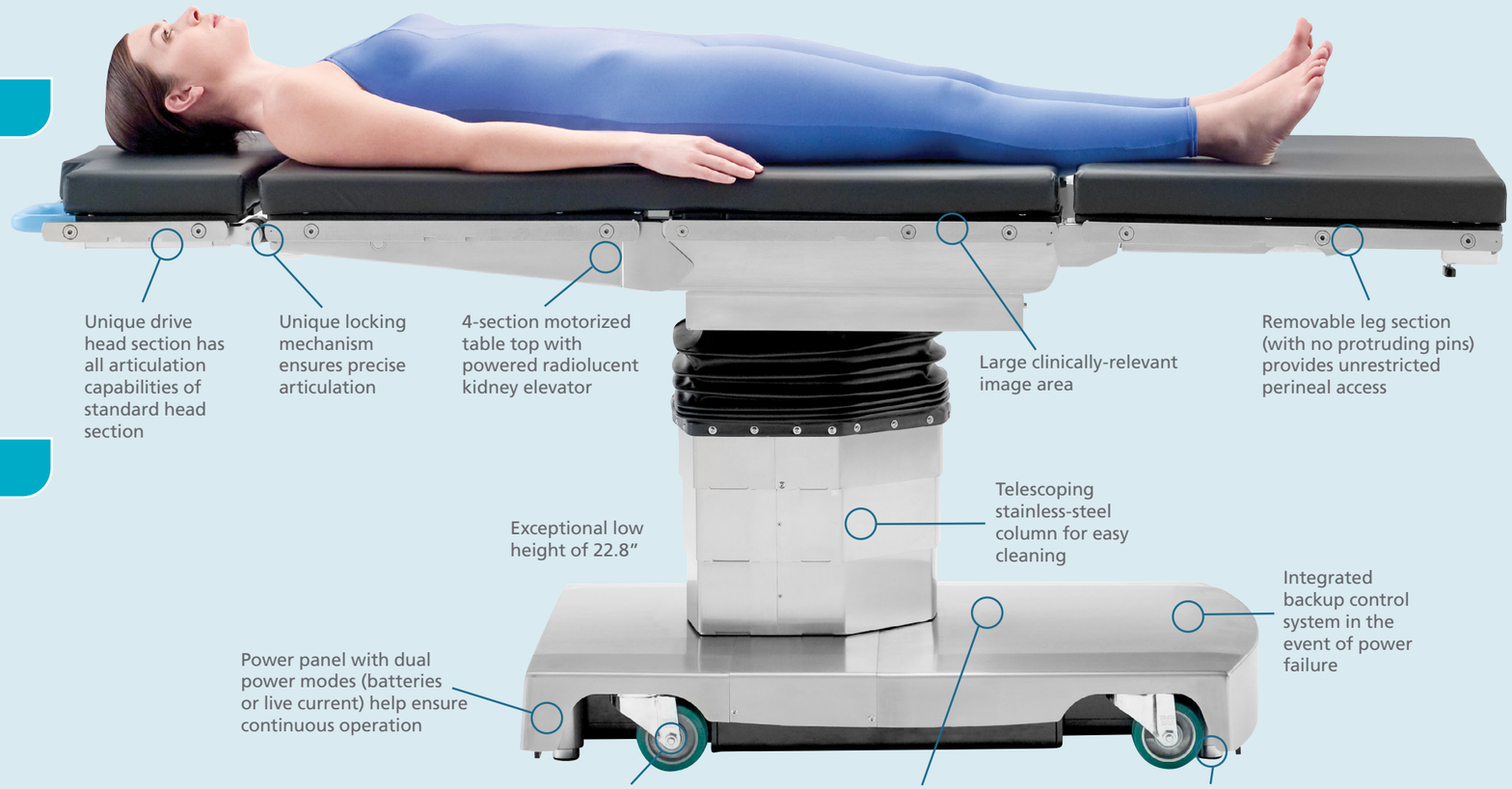

DESIGNED WITH SAFETY IN MIND

- Return-to-level button carefully repositions patient to maintain hemostasis
- Patient safety rails and variable speed help provide safe transport
- Anti-collision system prevents table damage from colliding sections and informs caregiver of alternative table articulation

PATIENT WEIGHT CAPACITY

1,200 lb. (544 kg) patient support, including raise/lower (when centered on the column in Normal Orientation; includes rotation)

1,000 lb. (454 kg) full table articulation (when centered on the column in Normal Orientation; includes rotation)

600 lb. (272 kg) full table articulation, including slide (includes rotation and transport)



Effortless Mobility

Unique drive wheel and smart head section makes workflow efficient.

The STERIS 5085 SRT surgical table's drive wheel and head section are designed to allow a single caregiver to safely rotate and transport a patient without gurneys or trolleys throughout the perioperative area. Additionally:

- Use parallel processing techniques to reduce non-operative time by moving several components outside of the OR, including patient transfers, inducing/waking the patient and cleaning the table
- Increase mobility with a battery-powered drive wheel
- Experience smooth movement with a removable head section that has integrated handles, drive engage/disengage button and toggle switch for forward/reverse propulsion
- Enhance stability on uneven floors with a low-profile base and hydraulically operated, self-compensating floor lock system
- Get quick access to transport with the one-button, return-to-transport mode



Drive Head Section
Ergonomically designed with drive and forward/reverse buttons; control the 5085 SRT with simplicity, confidence and safety in mind.

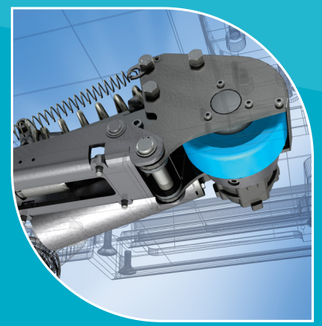

Full 360˚ Rotation
Central drive wheel locks and pivots the entire base and table for unsurpassed OR versatility and access for surgeons and C-arms.

Lighten Your Workload

Featherweight Leg Section

This modular, 24-inch removable leg section's carbon fiber constructionmakes it strong and ideal for imaging. It surpasses AORN guidelines for repeated lifting in the OR at only 14 lbs. OR staff will appreciate the light weight when removing and re-installing the leg section. The featherweight design greatly reduces the risk of strain and back injuries from lifting movements.

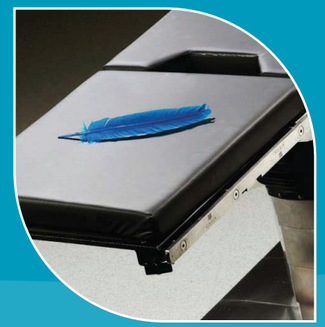

Short Featherweight Flexibility

Also available in an 18-inch length for convenience in orthopedic, gynecological and urological procedures. You can articulate the leg section down to -105° enabling you to leave the leg section attached during the procedure. The table can go down to a low position of 26 inches. Improve the ease and ergonomics of procedures by achieving a low height for a more comfortable position, especially when seated.



A LARGE IMAGING AREA ACCOMMODATES MORE NEEDS

Upper Body IA Coverage – Normal Patient Orientation

5085 SRT imaging length:
41.4" (1,051 mm)

Total imaging area:
635 sq. in. (4,093 sq. cm)

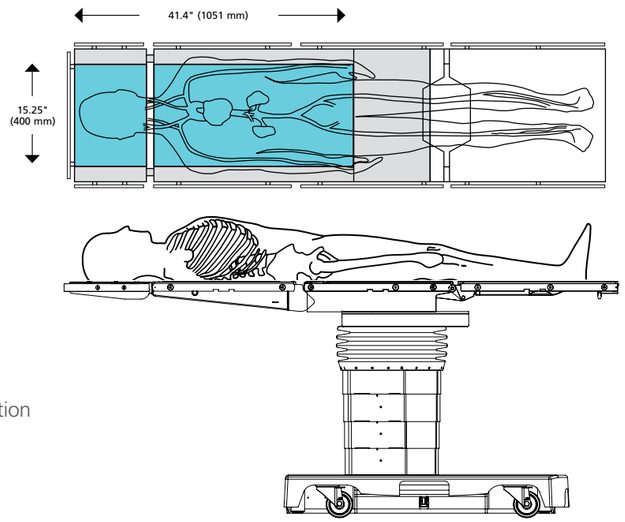

Common uses:

- Pacemaker insertions
- Hickman catheters
- Broviac insertions
- Shunts
- IVC filters
- Cholangiography
- Lung biopsies
- Thoracic and kidney
- Gall bladder
- Total hip revision
- Ophthalmic
- Neurosurgery
- Spinal
- Implantable defibrillation
- Endoscopy

Lower Body IA Coverage - Table Slid to Foot

5085 SRT imaging length:
39.5" (1,002 mm)

Total imaging area:
629 sq. in. (4,058 sq. cm)

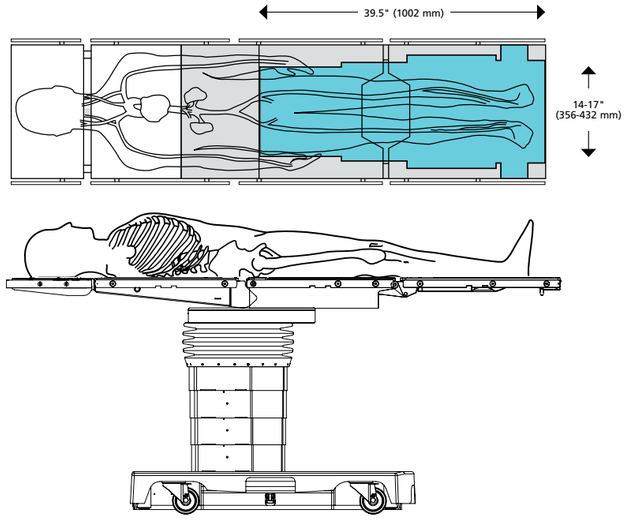

Common uses:

- Lower body arterial imaging
- Lower limb, non-traction orthopedics
- Femoral/popliteal bypass
- Laser angioplasty



Technical specifications

FEATURE	STERIS 5085 SRT SURGICAL TABLE
Table Length	83" (2098 mm)
Table Width	20" (508 mm) (28" with extenders)
Table Height Range	22.8" to 42.5" (581x1080 mm)
Tabletop Slide Range	9" (227 mm) to head, 9" to foot
Table Rotation	360°
Patient Weight Capacity**	• 1,200 lb. (544 kg) patient support, including raise/lower and rotate (centered on the column) • 1,000 lb. (454 kg) full table articulation and rotation (centered on the column) • 600 lb. (272 kg) full table articulation, including slide, rotate and transport
Table Shipping Weight	850 lbs. (386 kg)
Trendelenburg/Reverse	30° / 30°
Lateral Tilt (left/right)	20° / 20°
Head Section	+60° to -90° (10° increments)
Back Section	+80° to -40°
Leg Section	0° to -105°
Flex/Reflex	140° / 100°
Manual Override	Yes
Perineal Cut-out	Yes
Kidney Elevator	4" (110 mm) powered
Table Speed	Forward ≤ 1.9 mph (≤3 km/h) Reverse ≤ 1.2 mph (≤2 km/h)
Stopping Distance (at 2 mph/3 km/h with 600 lb. patient)	≤ 2' (0.6 m) with motor braking in forward motion

** Patient in Normal Orientation.

For more information, contact your STERIS representative or visit www.steris.com.

STERIS

5960 Heisley Road
Mentor, OH 44060-1834 · USA
440-354-2600 · 800-548-4873
www.steris.com

Document # M3302EN.2021.10.Rev.E
©2016-2021 STERIS
All rights reserved.