STERIS®



STERIS 5085 SRT Surgical Table

Operator Manual

en
413724247
Revision AB

© 2024 STERIS. All rights reserved.

Published: 2024-1-17

A Word from STERIS

Introduction

This manual contains important information on proper use and maintenance of this Surgical Table. **All personnel involved in the use and maintenance of this equipment must carefully review and comply with the Safety Precautions and instructions contained in this manual.** These instructions are important to protect the health and safety of personnel and patients involved in the use of this Surgical Table and should be retained in a conveniently accessible area for quick reference. This Surgical Table is only to be operated by users who have successfully been trained on its operation. Please contact STERIS for the required in-service and training.

Complete instructions for uncrating have been furnished. If missing, contact STERIS for a replacement copy, giving the serial and model numbers of the table. STERIS carries a complete line of accessories for use with this table. Contact STERIS for more information.

NOTE: A patient grounding post/potential equalization terminal (male connector, DIN 42801) is provided. The female connector for patient grounding is not furnished by STERIS.

Advisory

Safety Precautions and Pinch Points to be observed when operating and servicing this Surgical Table are included in this manual in the **Safety Precautions and Pinch Points** Section. Do not operate or service the table until you have become familiar with this information.

WARNING

PERSONAL INJURY AND/OR EQUIPMENT DAMAGE HAZARD



Repairs and adjustments to this equipment must be made only by STERIS or STERIS-trained service personnel. Maintenance performed by unqualified personnel or installation of unauthorized parts could cause patient injury, personal injury, result in improper equipment performance, invalidate the warranty, or result in costly damage. Contact STERIS regarding service options.

Serious incidents that have occurred in relation to this medical device should be reported to the manufacturer and competent authority in the country where the incident occurred.

Indications for Use

This Surgical Table is designed for most surgical procedures with maximum radiological access without patient reversing. This Surgical Table is also designed to safely move patients within the surgical suite (from pre-operative area to operating room and from operating room to post operative recovery).

The Surgical Table is to be operated by fully trained personnel who have successfully completed the Operator Training Course.

Waste Disposal

WARNING

DISPOSAL HAZARD



This product contains materials which may require disposal through appropriately licensed and permitted hazardous waste management firms.

CAUTION

POSSIBLE EQUIPMENT DAMAGE



Use of incorrect hydraulic oil may severely damage the table and/or cause malfunction. Contact STERIS for proper hydraulic oil.

The following materials may be contained within the table. When disposing of the table or its parts, ensure the proper disposal of hazardous and other regulated waste in compliance with federal, state, and local regulations.

Lead Acid (Pb/H_2SO_4): gelled cell batteries located in the table base at the head end of the table. Approximate weight 5 lb (2 kg).

Lead (Pb) in Solder: contained in solder on circuit boards and in some miscellaneous wire connections. Minute amounts.

Electronic and Electrical Parts: not known to require special disposal as of the date of this manual.

Metal Parts: made from aluminum (Al), steel (Fe), cast iron (Fe), copper (Cu), and copper alloys (Cu/x), plastic, synthetic rubber, plating (Cr, Ni, Zn, Au), and adhesives not known to require special disposal methods as of the date of this manual.

Hydraulic Oil: contained in hydraulic components located in the base, column, leg section, back section, and hydraulic system lines and hoses.

Polyvinylchloride (PVC): Approximate weight 3.8 lb (1.7 kg).

Service Information

A thorough preventive maintenance program is essential for safe and proper unit operation. This manual contains basic maintenance schedules and procedures which should be followed for satisfactory equipment performance. Comprehensive instructions for monthly, quarterly and semi-annual preventive maintenance can be found in the Maintenance Manual (available from STERIS).

Only STERIS-trained personnel should attempt to perform maintenance on the table, to avoid personal injury, improper equipment performance, invalidation of the equipment warranty or other costly damage. Contact STERIS for additional information on available training programs for biomedical staff.

Customers are encouraged to contact STERIS concerning our comprehensive preventive maintenance program. Under the terms of this program, preventive maintenance, adjustments and replacement of worn parts are provided on a scheduled basis to help ensure optimal equipment performance and help avoid untimely or costly interruptions. STERIS maintains a global staff of well equipped, factory-trained technicians to provide these services, as well as expert repair services. Please contact STERIS for details.

Associated Publications

Publications listed below are those which assist in the operation and service of this Surgical Table. When ordering, please include the part number and description of each publication requested. Order directly from STERIS.

Drawing Number	Drawing Title
413724247 413724246 P056404485	Operator Manual, 5085 SRT Operator Manual, 5085 General and Harmony Operator Manual, 5095
P764333472	Maintenance Manual
SD894 SD901 10270850 (SD1048) P056404492	Tech Data, 5085 SRT Tech Data, 5085 General Tech Data, 5085 Harmony Tech Data, 5095
413724503	Uncrating Instructions, 5085/5095

Contact Information

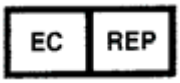

STERIS Ireland Limited
IDA Business and Technology Park
Tullamore
County Offaly
R35 X865 Ireland





Manufactured by:
STERIS Corporation
2720 Gunter Park East
Montgomery, AL 36109 USA
TEL: 334 277 6660
8004449009
www.steris.com

Class 1 Equipment
Type B Equipment



Splash-Proof Equipment (enclosed equipment protected against splashing water, IPX4)



Equipment not suitable for use in the presence of a flammable anesthetic mixture with air or oxygen or nitrous oxide.

Suitable for intermittent operation 3 min/hr.

The base language of this document is ENGLISH. Any translations must be made from the base language document.

TABLE OF CONTENTS

Section Number	Description	Page
1	**Safety Precautions and Pinch Points**	**1**
1.1	Introduction	1
1.2	Warning — Pinching Hazard	1
1.3	Warning — Tipping Hazard	4
1.4	Warning — Explosion Hazard	4
1.5	Warning — Tripping Hazard	4
1.6	Warning — Personal Injury Hazard	5
1.7	Warning — Instability Hazard	7
1.8	Warning — Pinching and Tipping Hazard	7
1.9	Warning — Personal Injury and/or Equipment Damage	7
1.10	Warning — Infection Hazard	11
1.11	Warning — Disposal Hazard	11
1.12	Warning — Electric Shock Hazard	11
1.13	Caution — Possible Equipment Damage	12
2	**Glossary**	**15**
2.1	Terms and Definitions	15
2.2	Definition of Symbols on Surgical Table	16
2.3	Definition of Symbols on Hand Control	18
3	**Important User Information**	**25**
3.1	Introduction	25
3.2	General Description	25
3.3	Technical Specifications	26
3.4	Tabletop Articulation and Patient Positioning	32
4	**Before Using the Table**	**35**
4.1	Introduction	35
4.2	Installation	35
4.3	Primary Hand Control	45
4.4	Reverse Patient Orientation	51
4.5	Optional Foot Control Operation	52
4.6	Backup Control System	52
4.7	Drive Head Section	55
4.8	Table Limits	57
5	**Surgical Table Operation**	**60**
5.1	Introduction	60
5.2	Table Preparation	60
5.3	Patient Transport Mode	63
5.4	Rotate Mode	66
5.5	Beach Chair Mode	68
5.6	Level Table Function	69
5.7	Record (Memory) Modes	70
6	**Troubleshooting**	**72**
6.1	Introduction	72
6.2	2 Red Control Icons and Beeps — ALM	73
6.3	ALS Alarm When Raising Back Section - nonALM	73

6.4 Bad Version — ALM 74
6.5 Batt Defect — ALM 74
6.6 Batteries Do Not Charge - nonALM 74
6.7 Battery Fuse — ALM 74
6.8 Battery Mode — ALM 75
6.9 Cannot Read Hand Control Display — nonALM 75
6.10 Charger Defect — ALM 75
6.11 Column Shroud Failure - nonALM 75
6.12 Connect AC Power or Plug Mains — ALM 76
6.13 Dual Command — ALM 76
6.14 False ALS After Slide-to-Foot Articulation - nonALM 76
6.15 Floor Lock Issue — nonALM 76
6.16 Hand Control Display Goes Blank During Master Control Program Download — nonALM 77
6.17 Hand Control Does Not Activate — nonALM 77
6.18 Hydraulic Pump Does Not Operate But Tabletop Slide Function Does - nonALM 77
6.19 Hydraulic Reservoir Shows Oil Loss But No Leaks Found - nonALM 77
6.20 INTELLIPOWER OFF, Hand Control ON, Power Switch LED ON - nonALM 78
6.21 INTELLIPOWER ON, Battery Status Indicator ON, Power Plug OFF — nonALM 78
6.22 Lock Again — ALM 78
6.23 Low Battery — ALM 78
6.24 Loss of Table Function But Battery Fuse (F8) OK - nonALM 79
6.25 Main Power Switch Green LED Off — nonALM 79
6.26 Master Control Board Failure — nonALM 79
6.27 Motor Defect — ALM 80
6.28 Motor Fail — ALM 80
6.29 No Functions Available Using Hand Control — nonALM 80
6.30 No Tabletop Slide and Floor Lock Operation - nonALM 81
6.31 Only Tabletop Slide Function Operates — nonALM 81
6.32 Power Defect — ALM 81
6.33 Pump Defect — ALM 81
6.34 Pump Fail — ALM 82
6.35 Reverse Orient Button Does Not Respond After Table Is in Beach Chair Mode - nonALM 82
6.36 Sensor DEF — ALM 82
6.37 Sensor Defect — ALM 82
6.38 Sensor Fail — ALM 83
6.39 Slide Defect — ALM 83
6.40 Slide Fail — ALM 83
6.41 Table Articulation Drifts — nonALM 83
6.42 Table Does Not FLEX, REFLEX, and LEVEL Using Hand Control — nonALM 84
6.43 Table Does Not Function on Facility Power But Does on Battery Power - nonALM 84
6.44 Table Does Not Raise/Lower Using Hand Control — nonALM 84
6.45 Table Does Not Tilt Using Hand Control — nonALM 85

6.46 Table Does Not Trendelenburg/Reverse Trendelenburg Using Hand Control — nonALM 85
6.47 Table Is Locked But Hand Control Indicates Unlocked - nonALM 85
6.48 Table Remains on Battery Power — nonALM 85
6.49 Table Rocks While on Casters - nonALM 86
6.50 Unanticipated Table Movement — nonALM 86
6.51 Unusual Noise While Tabletop Is Translating — nonALM 86
6.52 Valve Defect — ALM 86
6.53 Valve Fail — ALM 87
6.54 Voltage Peak — ALM 87
6.55 Wrench 2 — ALM 87
6.56 Wrench 7 — ALM 87
6.57 Wrench 9 — ALM 88
6.58 Wrench 10 — ALM 88
6.59 Wrench 11 — ALM 88
6.60 Wrench 12 — ALM 89
6.61 Wrench 13 — ALM 89
6.62 Wrench 14 — ALM 89
6.63 Wrench 15 — ALM 89
6.64 Wrench 17 — ALM 90
6.65 Wrench 18 — ALM 90
6.66 Wrench 20 — ALM 90
6.67 Wrench 21 — ALM 90
6.68 Wrench 22 — ALM 91
6.69 Wrench 23 — ALM 91
6.70 Wrench 24 — ALM 91
6.71 Wrench 25 — ALM 91
6.72 Wrench 26 — ALM 91
6.73 Wrench 27 — ALM 92
6.74 Wrench 28 — ALM 92
6.75 Wrench 29 — ALM 92
6.76 Wrench 30 — ALM 92
6.77 Wrench 31 — ALM 93
6.78 Wrench 32 — ALM 93
6.79 Wrench 33 — ALM 93
6.80 Wrench 34 — ALM 93
6.81 Wrench 38 — ALM 94
6.82 Wrench 39 — ALM 94
6.83 Wrench 42 — ALM 94
6.84 Wrench 47 — ALM 94
6.85 Wrong Use — ALM 95
7 Routine Maintenance 96
7.1 Read Before Performing Routine Maintenance 96
7.2 Cleaning Table 97
7.3 Bi-Weekly Maintenance 101
7.4 Monthly Maintenance 101
7.5 Battery Charging 101
7.6 ALS Check 103
7.7 LEVEL Check 103

7.8 Backup Hand Control Check 104
7.9 Replacement Parts 104
8 Appendix A - EMC Compliance 106
8.1 Introduction 106
8.2 EMC COMPLIANCE TECHNICAL DATA 106

Safety Precautions and Pinch Points

1.1 Introduction

The following *Safety Precautions* **must** be observed when operating or servicing this Surgical Table. For emphasis, certain *Safety Precautions* are repeated throughout the manual.

- **WARNING indicates the potential for personal injury.**
- **CAUTION indicates the potential for damage to equipment.**

It is important to review ALL *Safety Precautions* before operating, uncrating, testing, or servicing the table.

Strictly following these *Safety Precautions* enhances your ability to safely and effectively utilize the Surgical Table and helps the Customer avoid improper maintenance methods that may damage the table or render it unsafe. It is important to understand that these *Safety Precautions* are not exhaustive; Customers are encouraged to develop their own safety policies and procedures to enhance and complement these *Safety Precautions*.

IMPORTANT: *Please read the Operator Manual to get the best understanding and to help ensure best performance of this Surgical Table.*

Any maintenance performed on this Surgical Table, other than described in the manual (unless by authorized representatives of STERIS), shall be at the risk of invalidating the table warranty.

NOTE: Disregarding the presented safety information is considered ABNORMAL USE of this product.

1.2 Warning — Pinching Hazard

WARNING

PINCHING HAZARD

⚠ Pinch points are created during extreme tabletop articulation. Carefully review the illustrations in *Section 1.2, Warning — Pinching Hazard*, before operating the Surgical Table.

⚠ To avoid serious injury, keep limbs, fingers and other body areas clear of all pinch points when positioning the Surgical Table.

⚠ When manually positioning Surgical Table sections, stay clear of potential pinching hazards.

When inertia-driven or power-driven table parts close (especially during extreme tabletop articulation), pinch-point hazards exist. All personnel involved in tabletop positioning must examine and be aware of all pinch points before operating the Surgical Table.

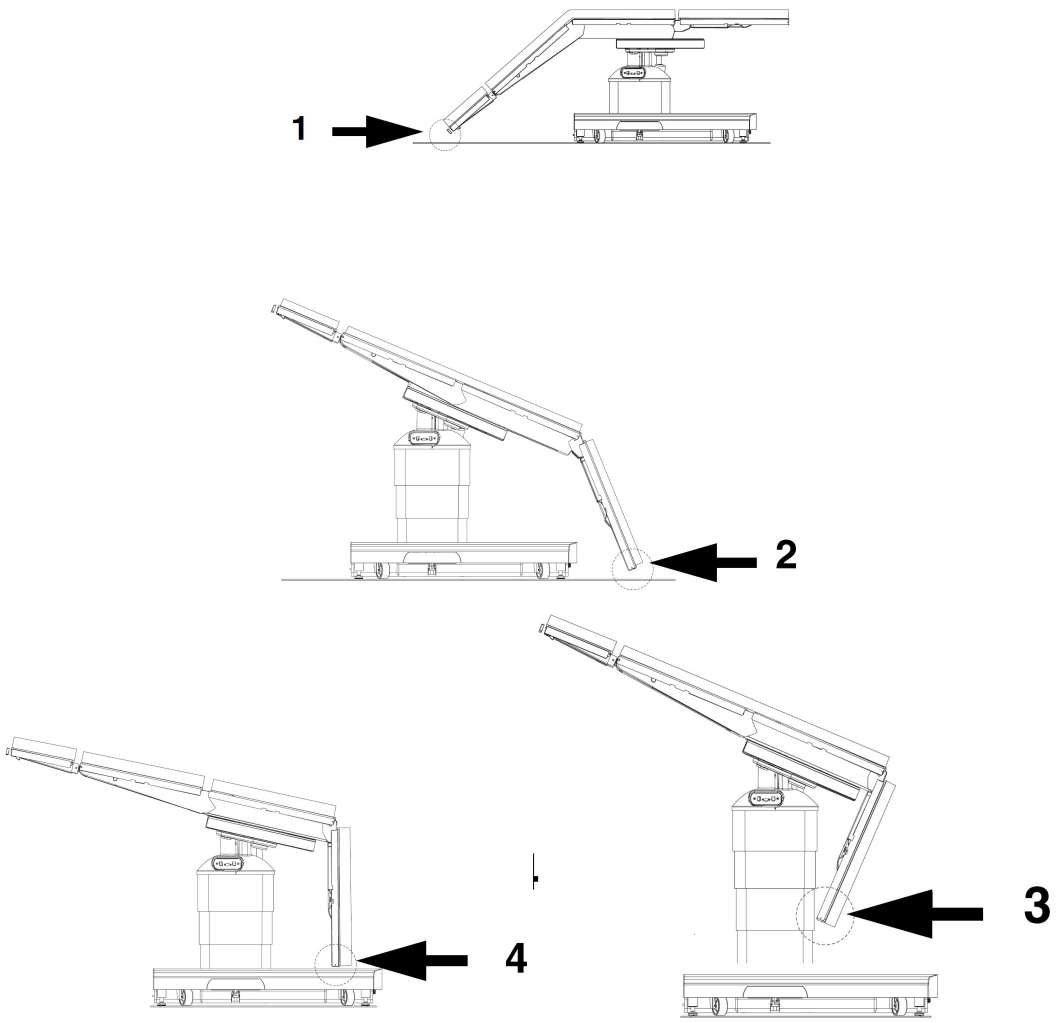

Figure 1-1. Pinch Points (Illustration 1 of 2)

Pinch points:

1. Between Head Rest and Floor
2. Between Leg Section and Floor
3. Between Leg Section and Column Cover
4. Between Leg Section and Base Cover

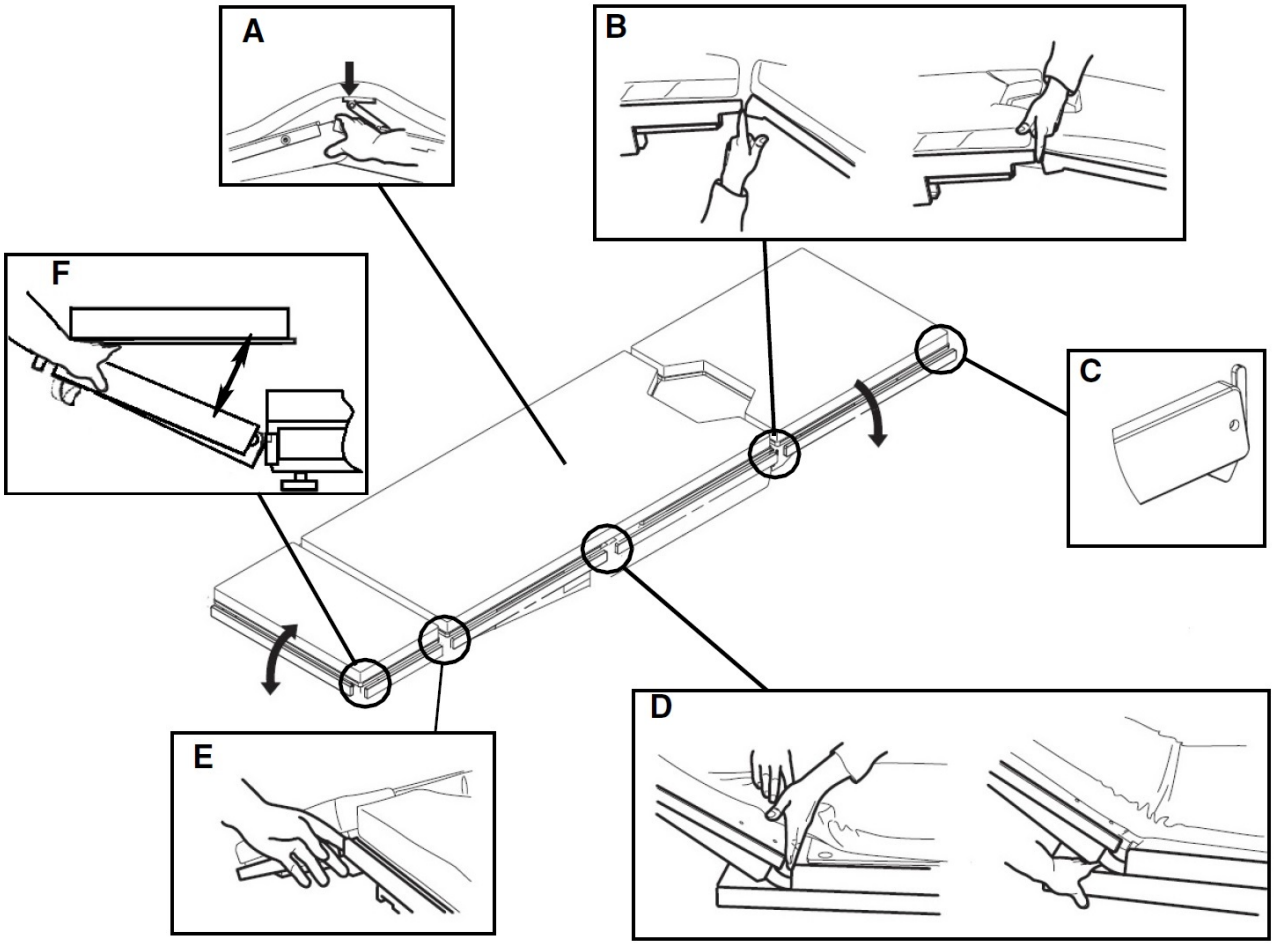

Figure 1-2. Pinch Points (Illustration 2 of 2)

Pinch points:

1. A — Between Kidney Elevator Mechanism and Seat Section
2. B — Between Leg Section and Seat Section
3. C — Side Rail Lock
4. D — Between Back Section and Seat Section
5. E — Between Head Rest and Back Section
6. F — Between Head Board and Head Rest Base (If Equipped)

1.3 Warning — Tipping Hazard

WARNING

TIPPING HAZARD

⚠ Do not transfer patient onto or off of the Surgical Table unless floor locks are engaged.

Do not use this Surgical Table for patients exceeding the maximum patient weight of:

- 1200 lb (544 kg) with the ability to rotate (SRT only) and raise/lower Table but no tabletop articulation or slide.
- 1000 lb (454 kg) General and SRT / 900 lb (408 kg) Harmony and 5095 with the ability to rotate (SRT only) and perform all patient posturing but without tabletop slide.

⚠

- 600 lb (272 kg) General / Harmony with the ability to perform all patient posturing and tabletop slide.
- 600 lb (272 kg) SRT with the ability to rotate, all patient posturing, transport feature (normal orientation only), and tabletop slide.

⚠ Center tabletop over column before applying chest compressions.

⚠ Center tabletop over column before transferring patient on or off of Surgical Table.

1.4 Warning — Explosion Hazard

WARNING

EXPLOSION HAZARD

⚠ Surgical Table must not be used in the presence of flammable anesthetics.

1.5 Warning — Tripping Hazard

WARNING

TRIPPING HAZARD

⚠ Route the power cord to the receptacle to minimize being tripped over by personnel in the area.

1.6 Warning — Personal Injury Hazard

WARNING

PERSONAL INJURY HAZARD

Failure to keep the patient properly secured with the patient safety straps at all times could result in death or serious injury.

For the 5085 and SRT Surgical Tables, failure to engage the floor locks before placing a patient on or removing from the Table or disengaging the floor locks while a patient is on the Table during a surgical procedure could result in the Table rolling unexpectedly during the procedure.

Keep hands and feet clear of the unloading platform and the Table base when uncrating the Table. Serious personal injury could result.

The 5085, 5085 Harmony, and 5095 Surgical Tables are not to be used to transport patients. With exception of slight repositioning, as detailed in the Operator Manual, never disengage floor locks when patient is on the table. Failure to heed this warning can result in injury to both the patient and the operating room staff.

Healthcare professionals must ensure patients are positioned and monitored so as to prevent compromising respiration, nerve pathways, or circulation.

When installing any table accessory, check for correct attachment and tighten securely (if appropriate). Do not use a worn or damaged accessory. Before using any accessory, ensure it has been installed properly.

Patient must be secured to the Surgical Table in accordance with recommended positioning practices. Unanticipated patient or table movement could result in death or serious injury.

When cleaning/disinfecting this Surgical Table, do not use phenolics which may cause patient skin burns if inadequately rinsed off, or alcohol, which does not have sufficient cleaning/disinfecting properties.

Do not exceed 350 lb (159 kg) on the leg section.

Dual-articulating headrest side rails support 100 ft-lb (135 N·m) maximum. The headrest end rail supports 50 ft-lb (67 N·m) maximum. Exceeding these limits could result in injury or equipment damage.

If the integrity of the external protective ground installation or arrangement is in doubt, operate the Surgical Table from its internal power source.

If an antistatic path is necessary, STERIS recommends antistatic pads (specifically developed for this Surgical Table) in direct contact with the patient. Table must also be positioned on antistatic floor or connected to equalization device (equipotential connector).

Do not remove Surgical Table leg section if patient is not properly positioned. Patient's torso and buttocks must be firmly held in place by Table back and seat sections and legs supported by leg supports.

Wear protective gloves prior to and during trimming and deburring of control board mount. Failure to do so can result in cuts from sharp edges.

Appropriate components of this Surgical Table have been tested and found in compliance with IEC 60601-2-46, Medical Electrical Equipment - Part 2-46: Particular requirements for the basic safety and essential performance of operating tables. There is, however, a potential that high frequency surgical equipment, cardiac defibrillators or cardiac defibrillator-monitors could interfere with this equipment and cause unanticipated Table movement producing possible patient and/or staff injury. Should user experience any interference, relocate this device or minimize the use of the interfering equipment while this device is in operation.

If Hand Control LCD warns of sensor failure (red wrench 12, 13, 14 or 17), table movement collision can occur.

For 5085 SRT Surgical Tables, ensure patient safety barrier bars are raised and locked and table is unplugged before attempting patient transport.

For 5085 SRT Surgical Tables, do NOT transport patient on anything but level floor.

Any alteration of the Surgical Table not authorized or performed by STERIS which could affect its operation voids the warranty, could adversely affect operator safety, and could violate national, state, or local regulations.

1.7 Warning — Instability Hazard

WARNING

INSTABILITY HAZARD

Possible patient or user injury, as well as Surgical Table or accessory failure, may result from using STERIS table accessories for other than their stated purpose - or from using accessories manufactured and sold by other companies for use on STERIS surgical tables.

1.8 Warning — Pinching and Tipping Hazard

WARNING

PINCHING AND TIPPING HAZARD

Patient injury may result if the operator of this Surgical Table is not completely familiar with the controls for tabletop articulation and table operation. All users should carefully review the Operator Manual before operating the table and be familiar with the operation before use on Patients.

1.9 Warning — Personal Injury and/or Equipment Damage

WARNING

PERSONAL INJURY AND/OR EQUIPMENT DAMAGE HAZARD

Patient or operator injury may result if the operator of this Table is not completely familiar with the controls for patient positioning and Table operation.

Repairs and adjustments to this equipment must be made only by STERIS or STERIS-trained service personnel. Maintenance performed by unqualified personnel or installation of unauthorized parts could cause personal injury, result in improper equipment performance, invalidate the warranty, or result in costly damage. Contact STERIS regarding service options.

Regularly scheduled preventive maintenance is required for safe and reliable operation of this equipment. Contact STERIS to schedule preventive maintenance.

Do not service or perform maintenance on equipment while in use.

Surgical Table is factory set to operate at a certain voltage. Use of any other power supply could result in serious personal injury or Table damage.

Failure to perform periodic inspections of this Surgical Table could result in serious personal injury or equipment damage.

The Auto Limit Sensors (ALS) System indicated potential collisions may not have complete data of the surgical environment. Surgical staff should therefore use professional judgement and common sense in evaluating whether to implement a suggestion.

ALS System is not active during Backup Control. Ensure proper tabletop movements to prevent patient/staff injury and/or equipment damage.

During Backup Control, tabletop functions are available even if Surgical Table floor locks are NOT engaged. LOCK table before moving tabletop or transferring patient.

Use of accessories, transducers, or cables with this Surgical Table, other than those specified, may result in increased emissions or decreased immunity of the table.

Do not store items on Surgical Table base. Doing so may result in equipment damage or inadvertent tabletop movement placing the patient and/or user at risk of injury.

Failure to keep all personnel and equipment clear of the Surgical Table before actuating any inertia-driven or power-driven movement could result in table damage and/or personal injury.

Hand Control must be attached to Surgical Table all times to enable safety stop and all modes of operation.

With patient in normal or reverse orientation, Surgical Table in Trendelenburg and slide at head limit, center tabletop before attempting to raise table to level or move into Reverse Trendelenburg.

Table performance is validated as a system including components defined by STERIS in the Operator and Service Manuals. Substitution of unauthorized components can potentially lead to personal injury, damage or premature failure of the product and result in a unit configuration that is inconsistent with the validated product. STERIS warranty is void if components are used that are not approved. DO NOT USE components that are not validated as part of this table.

Dual-articulating headrest side rails support 100 ft-lb (135 N▪m) maximum. The headrest end rail supports 50 ft-lb (67 N▪m) maximum. Exceeding these limits could result in injury or equipment damage.

Use care when separating the bearing assembly from each side of the Surgical Table as the sliding tabletop side member is now free-floating when the bearing assembly is removed. Avoid bumping or misaligning the side potentiometer pulley.

When the bearing assembly is removed from the Surgical Table, the seat section side member becomes free-floating. Be careful not to damage the slide potentiometer pulley that sits freely in the groove in the seat section side member.

To prevent column from falling, securely hold cover when removing the fastening screws.

Ensure tabletop is adequately supported.

Ensure tabletop is adequately supported before performing maintenance requiring tabletop to be maintained in the raised position.

Ensure tabletop is adequately supported. When Trendelenburg hydraulic cylinder is removed, tabletop is free to move.

Ensure tabletop is adequately supported. When tilt hydraulic cylinder is removed, tabletop is free to move.

Ensure tabletop is properly supported before removing tilt or Trendelenburg pivot screw. Removal of either pivot screw with an improperly supported tabletop could cause the table to drop, possibly resulting in injury and/or equipment damage.

Ensure tabletop is adequately supported. When hydraulic lines are disconnected from Main Hydraulic Valve Block, tabletop is free to move.

Lubrication makes the bearing rail assembly difficult to handle. Do not drop the assembly.

Use of this Surgical Table in the presence of flammable anesthetics could result in serious personal injury and/or table damage.

Do not use this Surgical Table for patients exceeding the maximum patient weight of:

- 1200 lb (544 kg) with the ability to rotate (SRT only) and raise/lower Table but no tabletop articulation or slide.
- 1000 lb (454 kg) General and SRT / 900 lb (408 kg) Harmony and 5095 with the ability to rotate (SRT only) and perform all patient posturing but without tabletop slide.
- 600 lb (272 kg) General / Harmony with the ability to perform all patient posturing and tabletop slide.
- 600 lb (272 kg) SRT with the ability to rotate, all patient posturing, transport feature (normal orientation only), and tabletop slide.

For 5085 SRT Surgical Tables, attempting Manual Rotating Mode while table is in Drive Limits increases the possibility of unwanted table Transport movement.

For 5085 SRT Surgical Tables, if transporting a patient requires an elevator, ensure elevator capacity for table, patient. and staff is adequate.

For 5085 SRT Surgical Tables, never transport patient in reverse orientation except when used with beach chair accessory. Serious patient injury can occur.

For 5085 SRT Surgical Tables, If transporting patient requires use of elevator, ensure elevator capacity for Table, patient, and staff is adequate.

If the integrity of the external protective ground installation or arrangement is in doubt, operate the Table from its internal power source.

1.10 Warning — Infection Hazard

WARNING

INFECTION HAZARD

To protect against aerosols being reflected from contaminated surfaces, wear appropriate PPE, including, but not limited to, rubber or plastic gloves, masks, and eye protection and follow OSHA blood-borne pathogens standards when cleaning.

When cleaning/disinfecting Surgical Table, do not use alcohol which does not have sufficient cleaning/ disinfection properties.

Gloves and eye protection are required for repair procedures. Areas of the Surgical Table may have biohazard materials, so decontaminate before using tools, and note that the use of tools may dislodge this material onto clothing or face. Before loosening or hammering on a part, note if any biohazard material is present and take proper precautions.

1.11 Warning — Disposal Hazard

WARNING

DISPOSAL HAZARD

This product contains materials which may require disposal through appropriately licensed and permitted hazardous waste management firms.

1.12 Warning — Electric Shock Hazard

WARNING

ELECTRIC SHOCK HAZARD

To avoid the risk of electric shock, this equipment must only be connected to a supply mains with protective earth.

Unplug Surgical Table from Facility electrical supply and remove battery fuse before servicing. Always follow electrical safety-oriented work practice standards.

1.13 Caution — Possible Equipment Damage

CAUTION

POSSIBLE EQUIPMENT DAMAGE

When moving the Surgical Table to or from point of use, roll or power it carefully at moderate speed and only over smooth floors. Maximum floor clearance is 1/4" (6.4 mm). Avoid door and elevator jambs, and obstructions greater than 1/4" (6.4 mm). If necessary, lift table over obstructions, onto trucks, etc. Lift table evenly and only by the table base. DO NOT transport articles (including accessories) on top of the table, and **DO NOT use a forklift to move the uncrated table**.

Hang the hand control from side rail of the Surgical Table when not in use to avoid possible damage to the control.

When cleaning/disinfecting Surgical Table, thoroughly read the cleaning fluid directions for use and follow all directions and cautions as shown.

Do not spray cleaning fluid into electric receptacles and avoid spraying directly on emergency backup buttons or into clearance space. Spray or drippage may settle onto electric circuits inside table causing corrosion and loss of function.

Cleaning procedures requiring articulation of the Surgical Table should be performed only by persons familiar with table operation.

Route the hand control cord clear of any pinch points where cord could be damaged.

Use of incorrect hydraulic oil may severely damage the Surgical Table and/or cause malfunction. Contact STERIS for proper hydraulic oil.

After performing cleaning procedures, ensure pads, tabletop, and X-Ray tops are completely dry before reinstalling. Failure to do so can result in damage to tabletop and pads. Moisture trapped between pads and X-Ray tops may contribute to equipment damage, such as X-Ray top warpage.

Appropriate components of this Surgical Table have been tested and found in compliance with IEC 60601-1-2, Medical Electrical Equipment Part 1; General Requirements for Safety; Electromagnetic Compatibility (EMC). There is, however, a potential for electromagnetic or other interference between this equipment and other devices. Should user experience interference, relocate this device or minimize the use of the affected equipment while this device is in operation.

Surgical Table operation may be temporarily affected if portable or mobile RF communications equipment is used in close proximity.

Medical Electrical Equipment needs special precautions regarding EMC. Put Surgical Table into service according to the EMC information provided in this manual.

Possible EMC increased EMISSIONS or decreased IMMUNITY. Do not use accessories or replacement parts not listed in the Operator or Maintenance Manuals.

Surgical Table operation may be affected if used adjacent to or stacked with other equipment. If adjacent or stacked use is needed, ensure table operates properly in this configuration.

The emissions characteristics of this equipment make it suitable for use in industrial areas and hospitals (CISPR 11 Class A). If it is used in a residential environment (for which CISPR 11 Class B is required) this equipment might not offer adequate protection to radio frequency communication services. The user might need to take mitigation measures, such as relocating or re-orienting the equipment.

Failure to keep all personnel and equipment clear of the Surgical Table before actuating any inertia-driven or power-driven movement could result in table damage.

Do not pull the hand control cord when disconnecting hand control from Surgical Table. This can result in damage to the hand control.

Static electricity can damage microprocessor controls. Indiscriminate probing of circuits or improper connections may result in immediate or delayed electrical failure. If the electronics are to accessed, use a personal grounding device. Exercise care in all activities involving the electronic circuitry.

⚠ Do not remove the bearing cartridges from the bearing rail. Damage may result to the cartridge and/or loss of the ball bearings upon reinsertion into the cartridges.

⚠ Isolate the coil and/or pump motor from the control by disconnecting the wires on the motor terminal board, or slip the wires off the solenoid coil.

⚠ Use care when separating the bearing assembly from each side of the Surgical Table as the sliding tabletop side member is now free-floating when the bearing assembly is removed. Avoid bumping or misaligning the slide potentiometer pulley.

⚠ When the bearing assembly is removed from the Surgical Table, the seat section side member becomes freefloating. Be careful not to damage the slide potentiometer pulley that sits freely in the groove in the seat section side member.

⚠ Always remove power from Surgical Table when moving control assembly to prevent any electrical shorting. Use of a strap to help hold control assembly out of the way is recommended.

⚠ Use of heat in vicinity of control and hydraulics is a concern. A piece of sheet metal should be used to shield these components from excess heat.

⚠ For 5085 SRT Surgical Tables, do not use any headrest other than the 5085 SRT Headrest on this Surgical Table. Use of any unapproved accessory damages table electronics.

⚠ For 5085 SRT Surgical Tables, with patient safety barriers installed and in lowered position, carefully lower Surgical Table to avoid collision of barriers and Table base.

Glossary

2.1 Terms and Definitions

Accessories - Optional surgical procedure devices attaching to the Surgical Table usually at the Side Rails.

ABS - Acrylonitrile Butadiene Styrene.

Backup (Override) Control System - Actuated at any time to allow Surgical Table operation in the event of primary control or power malfunction. A pedal (foot pump to provide hydraulic power) and Backup Hand Control comprise this system. The foot pedal is located at the side of the table base.

Backup Hand Control - Located at Surgical Table leg end behind a cover plate and stored in the table base.

Electrohydraulic - Combination of electric and hydraulic mechanisms.

Flex - Tabletop position where back section moves down and Tabletop moves into Reverse Trendelenburg.

Foot Control - Physician control of Surgical Table using foot pedals. Hand Control selections override Foot Control selections.

Floor Locks - Hydraulically operated Surgical Table locking system located in the Surgical Table Base.

Hand Control - Constructed of two-piece injection-molded thermoplastic materials, is the primary interface for Surgical Table operation. Hand Control is equipped with a 7.5' (2.3 m) extended long detachable cord. The Hand Control plugs into a receptacle located at the top of the Table Column. Membrane touch switches provide, through an auxiliary CPU, input signals to activate table functions and articulations.

HMI - Human Machine Interface (such as Hand, Foot, or Auxiliary Control).

I/O - Input/Output.

Normal Patient Positioning - Patient is positioned on Surgical Table with head on head section.

Orient Patient - Touch Pad on Hand Control. Press this touch pad to change patient orientation (NORMAL or REVERSE). Green LED indicates selected patient orientation.

Pilot Valves - Small valve that controls a limited-flow control feed to a separate piloted valve. Typically, this valve controls a high pressure or high flow feed. Pilot valves are useful because they allow a small and easily operated feed to control a much higher pressure or higher flow feed, which would otherwise require a muchlarger force to operate (even useful when a solenoid is used to operate the valve).

Pinch Point - During patient positioning or Tabletop movement where a potential exists for pinching a hand or foot of the patient or healthcare professional using the Surgical Table.

Power Panel - Located at head-end of the Table Base. Contains main power switch, primary fuses, ac receptacle for power cord, INTELLIPOWER display, and ground equalization terminal (male connection).

Reflex - Tabletop position where back section moves up and Tabletop moves into Trendelenburg position.

Reverse Patient Positioning - Patient is positioned on Surgical Table with head on leg section.

Reverse Trendelenburg - Lowering of Tabletop leg or foot section toward the floor.

Side Rail - Stainless-Steel rail attached to both sides of Surgical Table Tabletop.

Surgical Table - STERIS 5085 SRT, STERIS 5085 and 5085 Harmony General, and 5095 General Surgical Tables.

Table Base - Painted welded steel covered by stainless-steel enclosure. Base contains casters, drive wheel (SRT units only), floor locks, power assembly, master computer, Backup Hand Control, and hydraulic fluid.

Table Column - Supports Tabletop and includes lift cylinders, bearings, hydraulic piping, Trendelenburg hydraulic actuators and wiring. Covered and protected by two-piece stainless-steel shrouds.

Tabletop -Four section (head, back, seat, and leg) interlocking top supported by the Table Column and mobile Table Base.

Tilt - Lateral Tilt, movement of the Tabletop laterally.

Trendelenburg - Lowering of Tabletop head section toward the floor.

TLT Pads - Tri-Layer Technology Surgical Table Pads.

2.2 Definition of Symbols on Surgical Table

The following is a key to the various symbols that may exist on the Surgical Table:

Symbol	Definition
	Type B Equipment
	Protective Earth Ground (129360-483; Located On Top Of Base, Patient Head, Right Side)
	Equipotentiality
	Electric Shock Hazard
	Control Power ON
0	Control Power OFF
	Powered By AC
 - OR - 	Attention, Consult Manual for Further Instructions
A	Amperage Rating of the Unit
V	Voltage Rating of Unit
~	Alternating Current
Hz	Frequency Rating of Unit

Symbol	Definition
W	Power Rating
SN	Serial Number of the Unit
IPX4	Splash-Proof Equipment
REF	Equipment or Reorder Number
MD	Medical Device
UDI	Unique Device Identifier
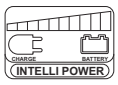	INTELLIPOWER® Dual Power System Power Panel (Battery Charge/Discharge Status)
	Powered By Battery
	Label, Table Identification (STERIS 5085 SRT Surgical Table Shown)
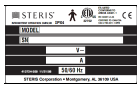	Data Tag (Located On Rear Saddle Cover, Right Side)
	Label, AC Cover Plate
	Label, Base Head End
	Label, E-Serve
	Label, Leg Position
	Label, Danger

Symbol	Definition
	Label, Pinch Point
	Label, Transport Warning (STERIS 5085 SRT Surgical Table Only)
	Label, Warning
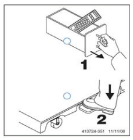	Label, Back Up Control Instruction — Located On Foot End Of Base
	Label, SRT Direction (STERIS 5085 SRT Surgical Table Only) — Located On STERIS 5085 SRT Headrest
	Label, SRT Enable (STERIS 5085 SRT Surgical Table Only) — Located On STERIS 5085 SRT Headrest
	Label, Weight Limit (STERIS 5085 SRT Surgical Table Shown)

2.3 Definition of Symbols on Hand Control

Table 2-1, through *Table 2-3*, contain symbols which may appear on the Surgical Table Hand Control (5085 General , 5085 Harmony, and 5085 SRT Units). *Table 2-4*, contains symbols which may appear on the STERIS 5095 Surgical Table Hand Control.

Table 2-1. Definition of Symbols on Hand Control

Symbol	Definition
	Move Tabletop to Level
	Patient Orientation on Surgical Table (Reverse/Normal)
	Stop All Table Articulation (Interrupts Power, Turns Power OFF)

Table 2-1. Definition of Symbols on Hand Control (continued)

Symbol	Definition
	Tilt Tabletop Left
	Tilt Tabletop Right
	Tabletop Up (Height Up; Raise)
	Tabletop Down (Height Down; Lower)
	Move Tabletop into Trendelenburg
	Move Tabletop into Reverse Trendelenburg
	Floor Lock Function
	Memory Function
	Forward (Right) Menu Function
	Reverse (Left) Menu Function
	Table Motion Function and LCD Menu Function Navigation; or, Right Dot and Left Dot

Table 2-2. Definition of Hand Control LCD Displays

Symbol	Definition
	Start Screen (STERIS 5085 SRT Surgical Table Screen Shown)
	Normal Orientation Screen (Slide Function Chosen)
	Reverse Orientation Screen (Slide Function Chosen)
	Level Screen
	Trendelenburg Screen
	Reverse Trendelenburg Screen
	Tilt Right Screen
	Tilt Left Screen
	Height Up Screen

Table 2-2. Definition of Hand Control LCD Displays (continued)

Symbol	Definition
	Height Down Screen
	MEM Functions (i.e., Rotate, Transport, Beach Chair, MEM1, MEM2) Beach Chair Mode Setup Screen Shown
	MEM Functions (i.e., Rotate, Transport, Beach Chair, MEM1, MEM2) Transport Mode Setup Screen Shown
	MEM Functions (i.e., Rotate, Transport, Beach Chair, MEM1, MEM2) Rotate Mode Setup Screen Shown
	Kidney Up Screen
	Kidney Down Screen
	Leg Select Screen
	Slide to Foot Screen
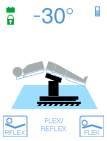	Flex Screen

Table 2-2. Definition of Hand Control LCD Displays (continued)

Symbol	Definition
	Reflex Screen
	Back Up Screen
	Floor Locks Engaged Screen

Table 2-3. Definition of Hand Control LCD Display Screen Icons

	Table Powered by Facility Power. Green = Normal Condition; Red = Fault Condition.
	Table Powered by Battery Power. Green = Battery Fully Charged; Gold = Battery Medium; Red = Battery Low (Table Hydraulics Power is OFF).
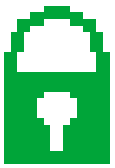	Floor Locks Engaged (Green).
	Floor Locks Released (Gold).
	Beach Chair Attached.

Table 2-3. Definition of Hand Control LCD Display Screen Icons (continued)

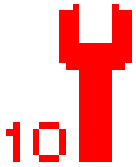	Alarm Condition (Red).
	Primary Hand Control. Blue = Normal Condition; Red = Fault Condition.
	Physician-Controlled Foot Control. Blue = Normal Condition; Red = Fault Condition.

Table 2-4. Definition of Hand Control Symbols (5095 Units)

Symbol	Color	Definition
	Green	POWER: Table is connected to facility power
	Green	POWER: Table is running with a fully charged battery
	Orange/Yellow	POWER: Table is running with a half-charged battery
	Red/Yellow	POWER: Table is running with a discharged battery
	Green	FLOOR LOCK STATUS: Floor locks are engaged
	Orange	FLOOR LOCK STATUS: Floor locks are not engaged
	Orange	MAINTENANCE: Surgical table has detected a condition requiring Service

Table 2-4. Definition of Hand Control Symbols (5095 Units) (continued)

Symbol	Color	Definition
	Blue/Yellow symbol with Orange text	AUTO LIMIT SENSOR (ALS): ALS sensors activating to prevent table collision with obstacle
	Blue	KIDNEY BRIDGE: Bridge is extended.
	Blue	HEAD/FOOT: Slide is positioned toward patient s head
	Blue	HEAD/FOOT: Slide is positioned toward patient s foot
	Green	KEY PRESS: Key has been pressed on Universal Hand Control
	Cyan	REFER TO INSTRUCTIONS: Reminds user to refer to supplied Operator Manual
	Blue	INCHES: Indicates slide position readout is displayed in inches
	Blue	CENTIMETER: Indicates slide position readout is displayed in centimeters
	Blue	POINTER: Indicates button user needs to push when selecting compatibility mode

Important User Information

3.1 Introduction

IMPORTANT: *This Surgical Table is only to be operated by users who have successfully been trained on its operation. Please contact STERIS for the required in-service and training.*

The product literature included in this section contains data relating to the principal characteristics of the Surgical Table and basic patient positioning.

The literature is informative rather than instructional. It provides and conveys, through text and illustrations, a general concept of the equipment, its purpose, limitations, and technical applications.

3.2 General Description

CAUTION

POSSIBLE EQUIPMENT DAMAGE

Appropriate components of this Surgical Table have been tested and found in compliance with IEC 60601-1-2, Medical Electrical Equipment Part 1; General Requirements for Safety; Electromagnetic Compatibility (EMC). There is, however, a potential for electromagnetic or other interference between this equipment and other devices. Should user experience interference, relocate this device or minimize the use of the affected equipment while this device is in operation.

The mobile and electro-hydraulically operated Surgical Table is specifically designed to provide the complete tabletop articulation flexibility required for modern surgical care facilities. It features powered lateral tilt, Trendelenburg/Reverse Trendelenburg, and adjustable height functions.

Additional features include:

- **designed to safely function with patients not exceeding the maximum patient weight limit:**
  - **1200 lb (544 kg) with the ability to rotate (SRT only) and raise/lower Table but no tabletop articulation or slide.**
  - **1000 lb (454 kg) General and SRT / 900 lb (408 kg) Harmony and 5095 with the ability to rotate (SRT only) and perform all patient posturing but without tabletop slide.**
  - **600 lb (272 kg) General / Harmony Tables with the ability to perform all patient posturing and tabletop slide.**
  - **600 lb (272 kg) SRT Table with the ability to rotate, all patient posturing, transport feature (normal orientation only), and tabletop slide.**
- **constructed of aluminum alloy, stainless steel, and other high quality materials.**
- **equipped with a large sliding tabletop providing unrestricted radiological access without patient reversing.**
- **powered by either internal battery or facility electric through use of the patent-pending INTELLIPOWER® dual power system.**
- **The STERIS 5085 SRT Surgical Table also offers a patient transport feature designed to safely move patients on hard level surfaces within the surgical suite (from pre-operative to operating room and from operating room to post operative recovery).**

The table accepts positioning commands from three sources, each of which is detailed elsewhere:

1. **A Universal Hand Control**

2. An optional physician-controlled Foot Control (which includes Trendelenburg Tilts, Lateral Tilts and Height functions).
3. An Auxiliary Control System permits table operation in the event of primary control malfunction

NOTE: The Dual-Articulating Head Rest and standard Head Sections are manually adjustable.

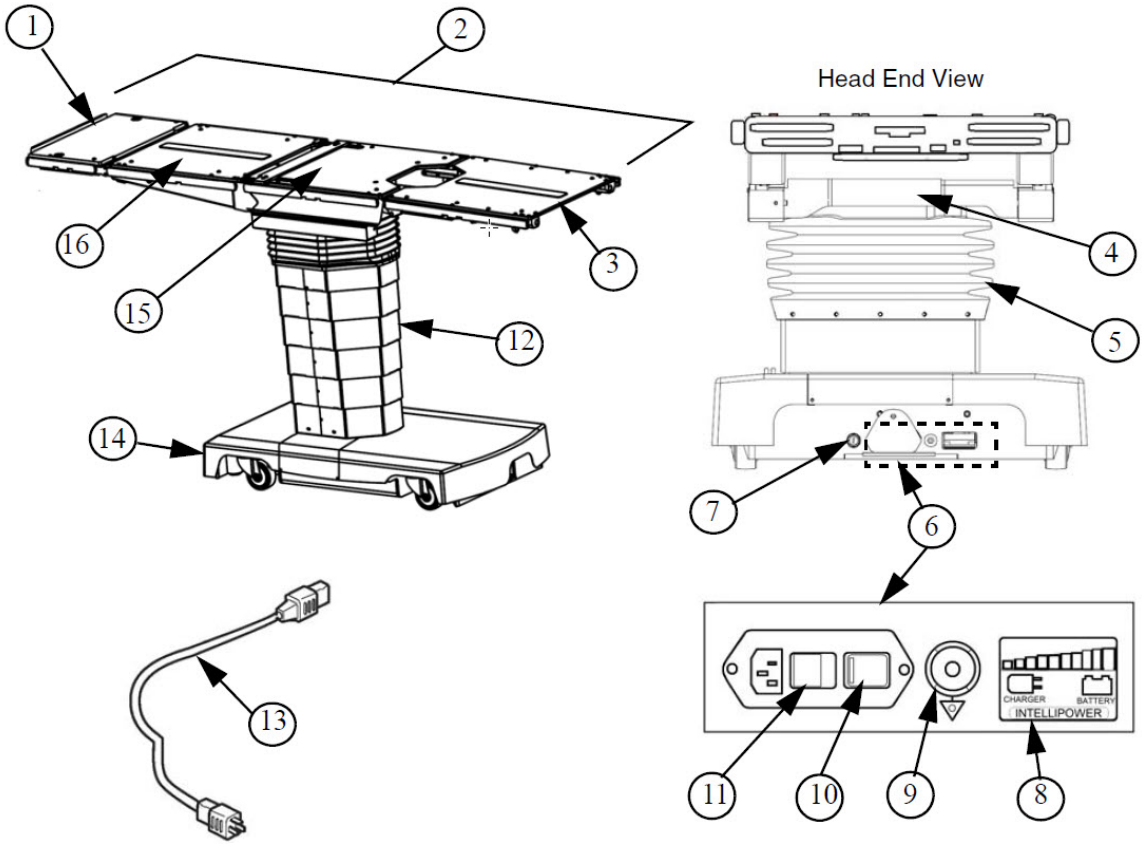

Figure 3-1. Table Components (Typical)

Legend:

1. Head Section*
2. Tabletop
3. Leg Section
4. Connection Panel †
5. Bellows
6. Power Panel
7. Battery Fuse
8. INTELLIPOWER Display
9. Ground Equalizaion Terminal (Male)
10. Primary Fuses
11. Main Power Switch
12. Column
13. Power Cord
14. Table Base
15. Seat Section (Sliding)
16. Back Section
17. Backup (Override) Control (Not Shown)
18. Foot Pump (Hydraulic) Pedal (Not Shown)

*Headrest, Dual-Articulating, Drive Head Section for 5085 SRT Units
† Connections for Universal Hand Control, Backup (Override), and Optional Foot Pedal Control

3.3 Technical Specifications

This section includes the following:

Essential Performance

Overall Size (W x L x H)
Weight
Line Power Input
Environmental Conditions
Transportation/Storage Conditions
Image Amplification Coverage
Range of Motion
EMC/High-Frequency Interference
Patient Transport (STERIS 5085 SRT Surgical Table)

Essential Performance

Essential Performance for Surgical Table:

1. **Support a patient without unwanted movement under single fault conditions.**
2. **Single fault conditions can include electrical, electromagnetic effects, or mechanical problems.**
3. **In extreme cases of electromagnetic interference, operator may experience temporary loss of table function. This situation can be corrected by removing source of interference and power cycling Surgical Table if necessary.**

Overall Size (W x L x H)

20 x 81 x 22.8 to 42.5" (508 x 2057 x 581 to 1080 mm) — STERIS 5095 General, 5085 General, and 5085 Harmony Surgical Tables

20 x 83 x 22.8 to 42.5" (508 x 2098 x 581 to 1080 mm) — STERIS 5085 SRT Surgical Table

See *Figure 3-2* and *Figure 3-3*.

NOTE: Society of Automotive Engineers (SAE) measurements are approximate based on metric dimensions.

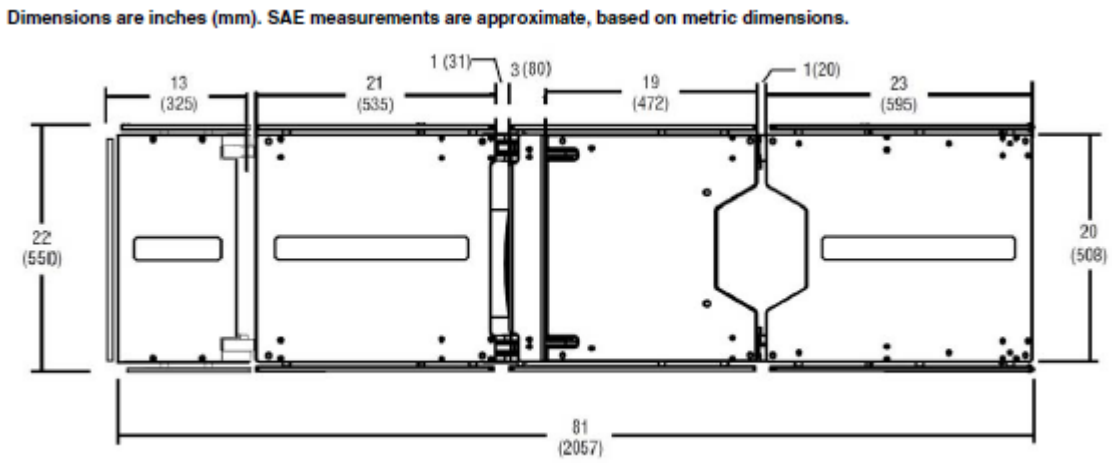

Figure 3-2. STERIS 5095 General Tabletop Dimensions (Typical)

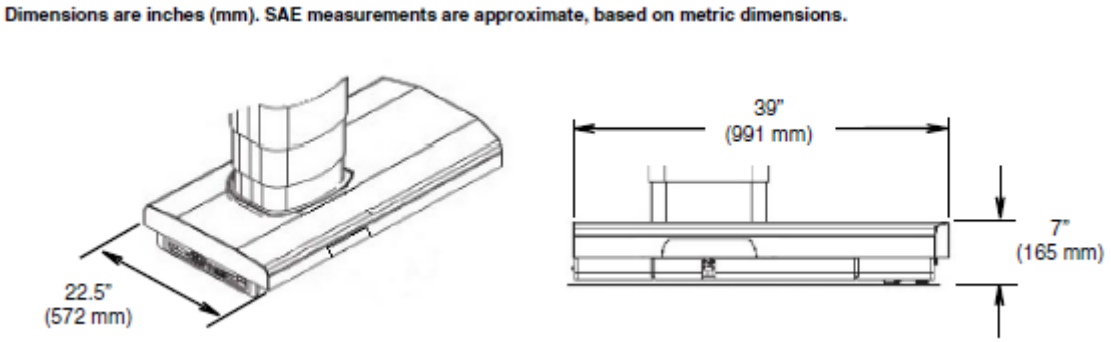

Figure 3-3. Base Dimensions (Typical)

Weight

STERIS 5095 General, 5085 General, and 5085 Harmony Surgical Table: Approximately 560 lb (250 kg)

STERIS 5085 SRT Surgical Table: Approximately 820 lb (372 kg)

Line Power Input

100 or 120, 220, or 230-240 Vac, One-Phase, 50/60 Hz, 4.0 Amp

Each table is shipped from the factory configured to the electrical requirement specified on the factory order. If this electrical configuration needs to be changed in the field, consult STERIS for the needed procedure and required materials.

Environmental Conditions

Temperature: 63 - 77 °F (17-25 °C)

Relative Humidity: 20 - 80% RH

Atmospheric Pressure: 700 - 1060 hPa

Transportation/Storage Conditions

Ambient Temperature: -40 - 158 °F (-40 - 70 °C); Not to exceed 15 weeks.

Relative Humidity: 10-100% non-condensing

Atmospheric Pressure: 500-1060 hPa

Image Amplification Coverage

Image amplification coverage is represented in a dimensional drawing (see *Figure 3-4*).

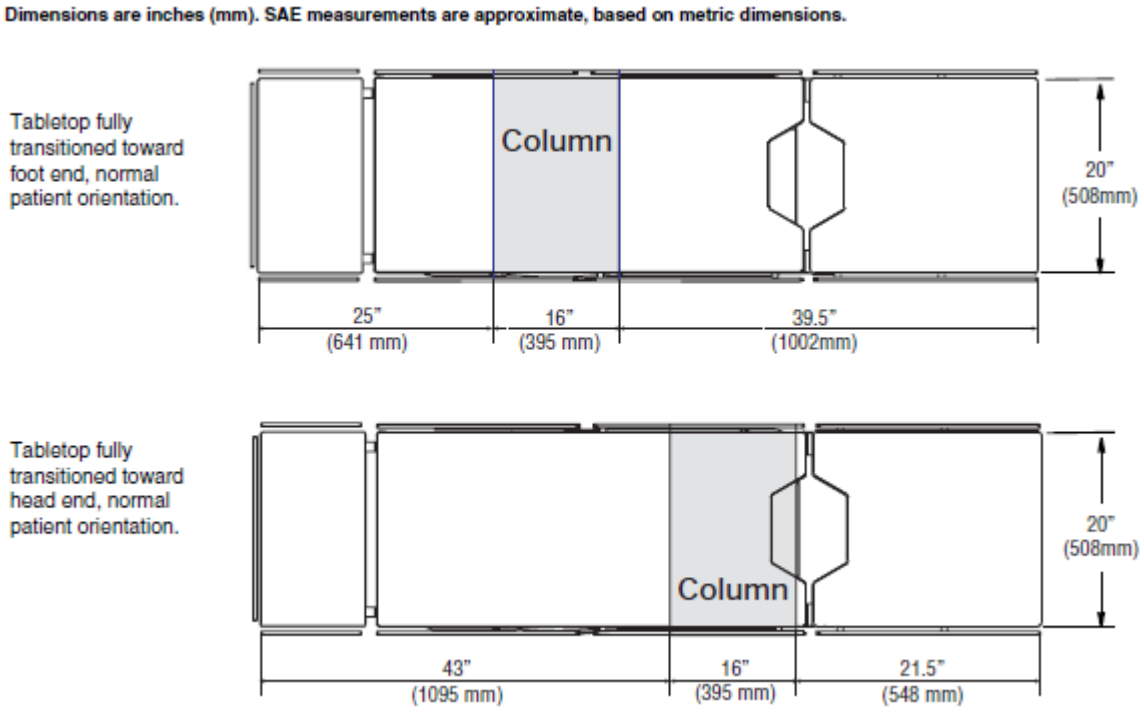

Figure 3-4. Image Amplification Coverage (Typical)

Range of Motion (Approximate)

Height: 26 to 45" (675 to 1136 mm); For SRT, 22.8 to 42.5" ±.25" (581 to 1080 mm ±6 mm)

Trendelenburg Range: 30° ±1°

Reverse Trendelenburg Range: 30° ±1°

Lateral Tilt Range: 20° ±1°

Slide Motion: HEAD: 9" (227 mm); FOOT: 9" (227 mm)

Back Section Motion: UP: 80° ±1°; DOWN: 40° ±1°

Leg Motion: UP: 0° ; DOWN: 105° ±1°

Kidney Elevator Mechanism: 4" (110 mm)*

Flex/Reflex: 140° ±1° / 100° ±1°

Head Motion (Manual): 90° ±1°

Head Motion (SRT, Manual): UP: 60° ±2°; DOWN: 90° ±2° (in 10° ±1° increments)

NOTE: Refer to specific Tech Data (refer to **Associated Publications** Section) for exact Range of Motion.

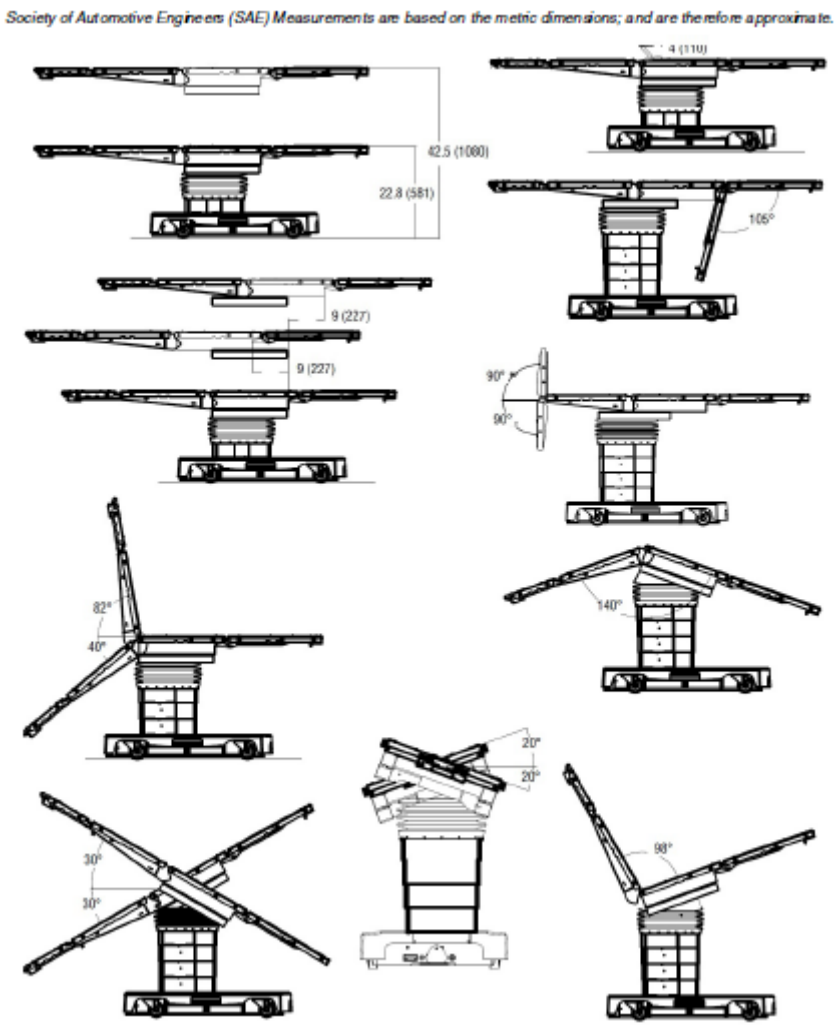

Figure 3-5. Table Articulation (Typical)

EMC/High-Frequency Interference

WARNING

PERSONAL INJURY AND/OR EQUIPMENT DAMAGE HAZARD

Use of accessories, transducers or cables with this Surgical Table, other than those specified, may result in increased emissions or decreased immunity of the table.

WARNING

PERSONAL INJURY HAZARD

Appropriate components of this Surgical Table have been tested and found in compliance with IEC 60601-2-46, Medical Electrical Equipment - Part 2-46: Particular requirements for the basic safety and essential performance of operating tables. There is, however, a potential that high frequency surgical equipment, cardiac defibrillators or cardiac defibrillator-monitors could interfere with this equipment and cause unanticipated Table movement producing possible patient and/or staff injury. Should user experience any interference, relocate this device or minimize the use of the interfering equipment while this device is in operation.

CAUTION

POSSIBLE EQUIPMENT DAMAGE

Appropriate components of this Surgical Table have been tested and found in compliance with IEC 60601-1-2, Medical Electrical Equipment Part 1; General Requirements for Safety; Electromagnetic Compatibility (EMC). There is, however, a potential for electromagnetic or other interference between this equipment and other devices. Should user experience interference, relocate this device or minimize the use of the affected equipment while this device is in operation.

Medical Electrical Equipment needs special precautions regarding EMC. Put Surgical Table into service according to the EMC information provided in this manual.

Possible EMC increased EMISSIONS or decreased IMMUNITY. Do not use accessories or replacement parts not listed in the Operator or Maintenance Manuals.

The emissions characteristics of this equipment make it suitable for use in industrial areas and hospitals (CISPR 11 Class A). If it is used in a residential environment (for which CISPR 11 Class B is required) this equipment might not offer adequate protection to radio frequency communication services. The user might need to take mitigation measures, such as relocating or re-orienting the equipment.

Note the following:

- **Medical Electrical Equipment needs special precautions regarding EMC and needs installed and put into service according to the EMC information provided in this manual.**
- **Portable and mobile RF communications equipment can affect Medical Electrical Equipment.**
- **For table control via e-Serve (RS-232) connection, note the table has been tested for EMC compliance using a 6 (2 m) long, shielded serial cable. A longer or unshielded cable could cause problems and must be observed to verify normal operation.**
- **The use of accessories, transducers and cables other than those specified by the manufacturer, may result in increased emissions or decreased immunity of this Surgical Table.**
- **The Surgical Table should not be used adjacent to or stacked with other equipment. If so, table should be observed to verify normal operation.**
- **Medical Electrical Equipment needs special precautions regarding high frequency interference. Equipment needs installed and put into service according to facility regulations and procedures.**
- **Potential hazards from the interfering high-frequency device could be patient burns and/or electrical shock of patient and operator.**

- **Potential explosion hazards caused by the interfering high-frequency device because this Surgical Table is not suitable for use in the presence of a flammable anesthetic mixture with air or oxygen or nitrous oxide.**

Patient Transport (STERIS 5085 SRT Surgical Table)

Table Speed: *Forward* ≤1.9 mph (≤3 km/h); *Reverse* ≤1.2 mph (≤2 km/ h)

Table Weight Capacity: 600 lb (272 kg)

Maximum Incline Angle: 5°

Stopping Distance: ≤2′ (0.6 m) with motor braking (at 2 mph [3 kmh] with 600 lb patient)

3.4 Tabletop Articulation and Patient Positioning

IMPORTANT: *A listing of the Safety Precautions to be observed when operating and servicing this Surgical Table can be found in* ***Safety Precautions and Pinch Points*** *of this manual. Do not operate or service the equipment until you have been trained on this information.*

This section includes the following:

Tabletop Articulation and Weight Limitation

Positioning Patient on Table

Patient Safety Straps

Table Repositioning With Patient Aboard (Not Transport)

Safety Barriers (SRT)

Tabletop Articulation and Weight Limitation

WARNING

TIPPING HAZARD

⚠ Do not transfer patient onto or off of the Surgical Table unless floor locks are engaged.

Do not use this Surgical Table for patients exceeding the maximum patient weight of:

⚠

- 1200 lb (544 kg) with the ability to raise/lower table but no tabletop articulation or slide.
- 1000 lb (454 kg) General and SRT / 900 lb (408 kg) Harmony and 5095 with the ability to perform all patient posturing but without tabletop slide.
- 600 lb (272 kg) General / Harmony with the ability to perform all patient posturing and tabletop slide.
- 600 lb (272 kg) SRT with the ability to rotate, all patient posturing, transport feature (normal orientation only), and tabletop slide.

⚠ Center tabletop over column before applying chest compressions.

⚠ Center tabletop over column before transferring patient on or off of Surgical Table.

WARNING

PERSONAL INJURY HAZARD

The 5085, 5085 Harmony and 5095 Surgical Tables are not to be used to transport patients. With exception of slight repositioning, as detailed in the Operator Manual, never disengage floor locks when patient is on the table. Failure to heed this warning can result in injury to both the patient and the operating room staff.

Healthcare professionals must ensure patients are positioned and monitored so as to prevent compromising respiration, nerve pathways, or circulation.

Do not exceed 350 lb (159 kg) on the leg section.

Dual-articulating headrest side rails support 100 ft-lb (135 N▪m) maximum. The headrest end rail supports 50 ft-lb (67 N▪m) maximum. Exceeding these limits could result in injury or equipment damage.

NOTE: Accessories may have a specified weight limitation that is less than that of the Surgical Table. Do not exceed the lowest weight limit, table or accessory.

Do not exceed the maximum patient weights specified in the Safety Precautions and Pinch Points section

Positioning Patient on Table

1. **Always check patient stability when patient is positioned.**
2. **Do not place patient on this Surgical Table unless floor locks are engaged.**
3. **Use extreme care when transferring patients to or from Table.**
4. **Ensure all accessories are properly installed and secured.**
5. **Check for and eliminate harmful patient pressure points once patient is positioned.**
6. **Have a qualified medical professional monitor patient during surgery for all possible tabletop articulation hazards.**
7. **Do not exceed 350 lb (159 kg) on the Leg Section. Leg Section is not designed to support full body weight.**
8. **Dual-articulating headrest (if equipped) side rails support 100 ft-lb (135N▪m) maximum. The headrest end rail supports 50 ft-lb (67 N▪m) maximum. Exceeding these limits could result in injury or possible equipment damage.**
9. **For 5085 SRT Tables, if transporting a patient on the Table, ensure patient barriers are installed before transporting.**

IMPORTANT: *All patients must be restrained for proper safety regardless of the length or type of procedure.*

NOTE: STERIS recommends only using STERIS manufactured or distributed accessories with this table. Use of accessories not manufactured or approved by STERIS may not be compatible with this table and could result in injuries or equipment damage.

Patient Safety Straps

WARNING

PERSONAL INJURY HAZARD

Failure to keep the patient properly secured with the patient safety straps at all times could result in death or serious injury.

Adjust the patient safety straps such that they restrain the patient according to currently accepted patient restraining practices, keeping in mind the Trendelenburg/Reverse Trendelenburg, back, lateral tilt and height adjustment.

Table Repositioning With Patient Aboard (Not Transport)

If this Surgical Table needs to be repositioned within the operating room with the patient aboard, utilize the following procedure:

1. **Ensure patient is properly secured.**
2. **Center and level tabletop with patient over column.**
3. **Lower tabletop to lowest possible height.**
4. **Ensure table path is clear of obstructions.**
5. **One person must be at each end of tabletop.**
6. **Release floor locks.**
7. **If the Table is moved with the patient aboard, apply only lateral force to reposition Table.**
8. **DO NOT push down on or lift tabletop while repositioning Table.**
9. **Once Table is repositioned, lock Table by engaging all floor locks.**

Safety Barriers (SRT)

WARNING

PERSONAL INJURY HAZARD

For 5085 SRT Surgical Tables, ensure patient safety barrier bars are raised and locked and table is unplugged before attempting patient transport.

For 5085 SRT Surgical Tables, do NOT transport patient on anything but level floor.

CAUTION

PERSONAL INJURY HAZARD

For 5085 SRT Surgical Tables, with patient safety barriers installed and in lowered position, carefully lower Surgical Table to avoid collision of barriers and Table base.

Before transport, ensure patient safety barrier bars are raised and locked in place.

Before Using the Table

4.1 Introduction

IMPORTANT: *A listing of the Safety Precautions to be observed when operating and servicing this Surgical Table can be found in* ***Safety Precautions and Pinch Points*** *of this manual. Do not operate or service the equipment until you have been trained on this information.*

Use the following information to install Surgical Table fuses, connecting to Facility power, and installing controls and table sections.

4.2 Installation

This section includes the following:

Introduction

Grounding

Positioning the Table

Installing Battery Fuse (F8)

Installing Main Control Fuses (F6 and F7)

Connecting Table to Facility Power

Connecting Primary Hand Control

Installing Drive Head Section

Attaching/Removing Leg Section

Connecting Optional Foot Control

Installing/Removing Table Pads

Installing/Removing X-Ray Top

Accessories/Side Rails

Introduction

WARNING

PERSONAL INJURY HAZARD



- Any alteration of the Surgical Table not authorized or performed by STERIS which could affect its operation voids the warranty, could adversely affect operator safety, and could violate national, state, or local regulations.
- Keep hands and feet clear of the unloading platform and the Table base when unloading the Table. Serious personal injury could result.
- If the integrity of the external protective ground installation or arrangement is in doubt, operate the Table from its internal power source.

WARNING

EXPLOSION HAZARD

Surgical Table must not be used in the presence of flammable anesthetics.

WARNING

TRIPPING HAZARD

Route the power cord to the receptacle to minimize being tripped over by personnel in the area.

WARNING

PERSONAL INJURY AND/OR EQUIPMENT DAMAGE HAZARD

Surgical Table is factory set to operate at a certain voltage. Use of any other power supply could result in serious personal injury or Table damage.

CAUTION

POSSIBLE EQUIPMENT DAMAGE

For 5085 SRT Surgical Tables, when moving the Surgical Table to or from point of use, roll or power it carefully at moderate speed and only over smooth floors. Maximum floor clearance is 1/4" (6.4 mm). Use supplied bridge (provided as part of original packaging) for door and elevator jambs (or any obstructions) greater than 1/4" (6.4 mm). If necessary, lift Table over obstructions, onto trucks, etc. Lift Table evenly and only by the Table base. If transporting articles (including accessories) on top of the Table, ensure all articles are properly secured to prevent falling off tabletop. **DO NOT use a forklift to move the uncrated Table.**

Check the overall condition of the Surgical Table and all applicable accessories/options upon receipt to ensure nothing was damaged during shipment. If damage appears to have occurred, contact the shipping company and STERIS.

STERIS recommends that only STERIS-trained or STERIS-supervised personnel attempt to uncrate/crate, install, and perform maintenance on this Surgical Table. Uncrating, crating, installation, or maintenance by others may result in personal injury or damage to the product.

Grounding

A patient grounding post/potential equalization terminal (male connector, DIN 42801) is provided. The mating female connector for patient grounding **is not furnished by STERIS**.

Positioning the Table

WARNING

PERSONAL INJURY HAZARD

If an antistatic path is necessary, STERIS recommends antistatic pads (specifically developed for this Surgical Table) in direct contact with the patient. Table must also be positioned on antistatic floor or connected to equalization device (equipotential connector).

Position Surgical Table at desired location, ensuring that the Facility electrical outlet is marked for the applicable power system in the range of 100-240 Vac. See *Connecting Table to Facility Power*.

Note that the power cord is approximately 18 ft (5.5 m) long.

NOTE: The table is equipped with INTELLIPOWER® dual power system modes, enabling operation from connection to either Facility (ac) power or on its own battery power.

Installing Battery Fuse (F8)

If not installed, install 16A battery fuse (F8; available in fuse set 342212555) into Surgical Table base as follows (see *Figure 4-1*):

1. **Locate correct battery fuse.**
2. **At foot-end of table base, unscrew and remove black fuse cap.**
3. **Insert fuse in cap.**
4. **Insert fuse (with cap) into fuse holder assembly in table base.**
5. **Push in fuse and cap and turn a quarter turn to lock assembly into table base.**

   NOTE: If Surgical Table is going to be stored for more than three months, remove fuse to limit battery discharge.

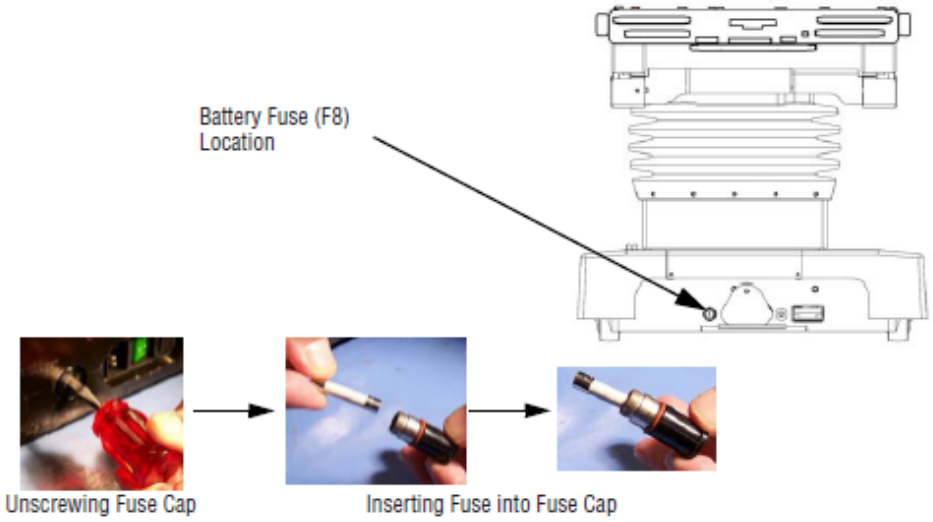

Figure 4-1. Installing or Replacing Fuses

Installing Main Control Fuses (F6 and F7)

If not installed, install two 4 Amp main control fuses (F6 and F7; 639600038) into head-end of Surgical Table base as follows (see *Figure 4-2*):

1. **Locate F6 and F7, 4 Amp fuses, in a cartridge beside the ac input at head-end of Table base.**
2. **Turn power OFF.**
3. **Disconnect ac power cord from Facility power.**
4. **Pry cartridge out with a small screwdriver to access fuses.**
5. **Remove blown fuse(s) and replace.**
6. **Push cartridge back into connected position.**
7. **Remove battery fuse at foot-end of Table base.**

8. **Reconnect ac power cord to wall receptacle.**
9. **Turn power ON.**
10. **Verify INTELLIPOWER dual power system indicates Table is operating on ac power (green LED must be ON).**
11. **Ensure Table functions properly.**
12. **Return battery fuse.**

NOTE: If Surgical Table is going to be stored for more than three months, remove fuse to limit battery discharge.

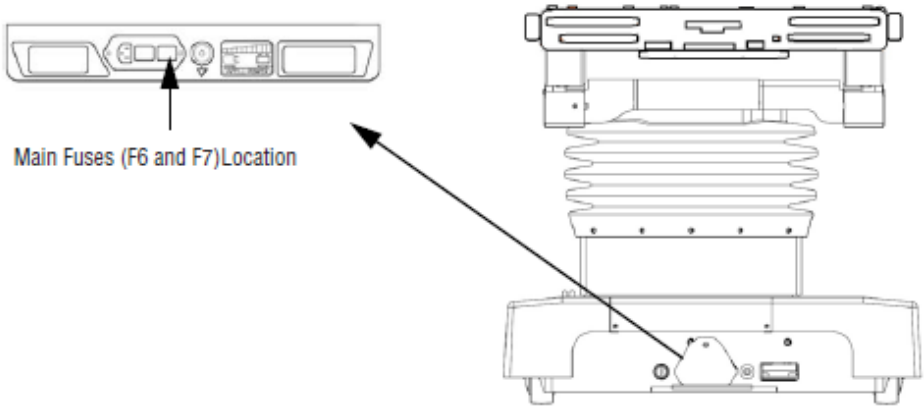

Figure 4-2. Installing or Replacing Main Fuses (F6 and F7)

Connecting Table to Facility Power

Required line power for Surgical Table is 100-240 Vac, single-phase, 50/60 Hz, 4.0 Amp.

Each Table is shipped from the factory configured to the electrical requirement specified on the factory order. If this electrical configuration needs to be changed in the field, consult STERIS for the needed procedure and required materials.

NOTE: Before connecting the Surgical Table to Facility (ac) power system, ensure Table is marked for Facility power system (100, 120, 220, or 230/240 Vac).

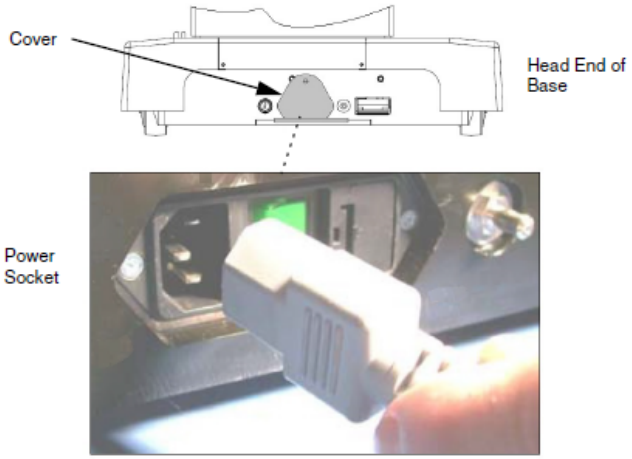

Figure 4-3. Connecting Table to Facility Power (Typical)

1. **Route power cord to prevent tripping hazard.**
2. **Plug power cord into appropriate socket on Table base (see *Figure 4-3*).**
3. **Plug power cord into appropriate Facility outlet.**

   NOTE: When integrity of external protective earth conductor arrangement is in doubt, use battery power only.
4. **Turn Main Power Switch to ON.**
5. **Switch turns Green and plug symbol on INTELLIPOWER® LED Display lights.**

NOTE: A green Main Power Switch indicates Facility power is available to the Surgical Table. A lighted plug symbol on the LED Display indicates the batteries are charging. Refer to *Section 7.5, Battery Charging*.

Connecting Primary Hand Control

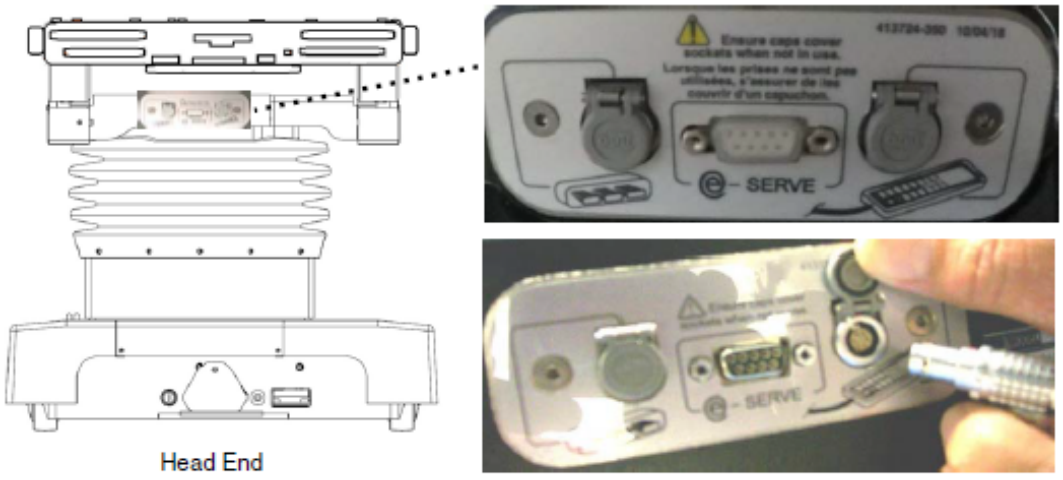

Figure 4-4. Connecting Primary Hand Control

For the following steps, refer to *Figure 4-4* and as needed.

1. **Remove Primary Hand Control from package.**
2. **Lift hinged plastic protective cover for handle connection socket.**

3. Align red mark (or arrow) on hand control plug with red mark on connection socket.
4. Push hand control plug into Table socket until a "click" is heard.
5. With Table at desired location, use Floor Lock button (on hand control) to lock Table in place.
6. Place hand control on Table side rail.

Installing Drive Head Section

CAUTION

POSSIBLE EQUIPMENT DAMAGE

⚠ For 5085 SRT Surgical Tables, do not use any headrest other than the 5085 SRT Headrest on this Surgical Table. Use of any unapproved accessory damages table electronics.

Install Drive Head Section as follows:

1. Carefully align Drive Head Section mounting posts with back frame receptacles (see *Figure 4-5*).
2. Insert both head section mounting posts into back frame receptacles and gently push until fully engaged “click” is heard.

   NOTE: The head section should slide easily into back frame. Do not force.
3. ALS system assumes head section is level with back section. If not, Surgical Table articulations toward head end could cause Table damage.



Figure 4-5. Install Drive Head Section

Attaching/Removing Leg Section

WARNING

PERSONAL INJURY HAZARD

⚠ Do not exceed 350 lb (159 kg) on the leg section.

NOTE: This Surgical Table is equipped with Hi-Lock™ locking mechanism enabling quick and easy removal/installation of the leg section with a safety lock feature.

ATTACHING

Attach leg section as follows:

1. **Using Primary Hand Control, position table top seat section to horizontal by pressing LEVEL button or Leg Up screen on LCD Display.**
2. **Insert both leg section installation rods into seat frame until fully engaged. Listen for "click" sound to indicate correct installation (see *Figure 4-6*).**

   NOTE: The leg section should slide easily into the back frame (seat section). Do not force.
3. **Pull leg section (both sides) to ensure correct installation.**
4. **Also, activate Leg UP and Leg DN hand control LCD Display screens and verify screen reads a changing angle value to ensure leg section has been installed properly.**



Figure 4-6. Attaching Leg Section

REMOVING

WARNING

PERSONAL INJURY HAZARD

⚠ Do not remove Surgical Table leg section if patient is not properly positioned. Patient's torso and buttocks must be firmly held in place by Table back and seat sections and legs supported by leg supports.

Remove legs section as follows:

1. **Using Primary Hand Control, position table top seat section to horizontal by pressing LEVEL button or Leg Up screen on LCD Display.**
2. **While holding leg frame, squeeze both handles and simultaneously pull backward (see *Figure 4-7*).**
3. **Safely store leg section to prevent damage**

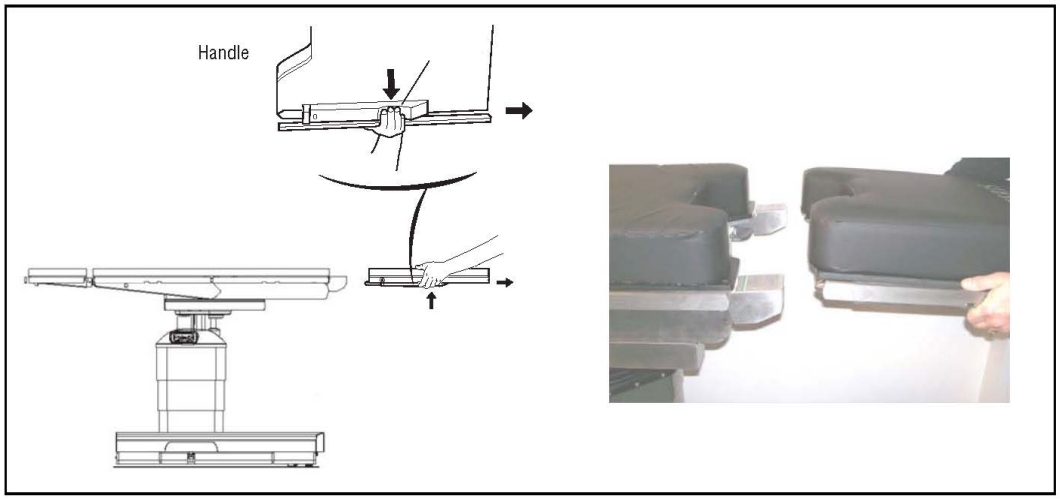

Figure 4-7. Leg Section Removal

Connecting Optional Foot Control

The optional foot control allows operator to control HEIGHT, TREND, and TILT movements.

Install the option as follows (see *Figure 4-8*):

1. **Remove foot control from package.**
2. **Lift hinged plastic protective cover for foot control connection socket.**
3. **Align red mark (or arrow) on foot control plug with red mark on associated connection socket.**
4. **Push foot control plug into Table socket until a "click" is heard.**
5. **Place foot control where it cannot be damaged.**

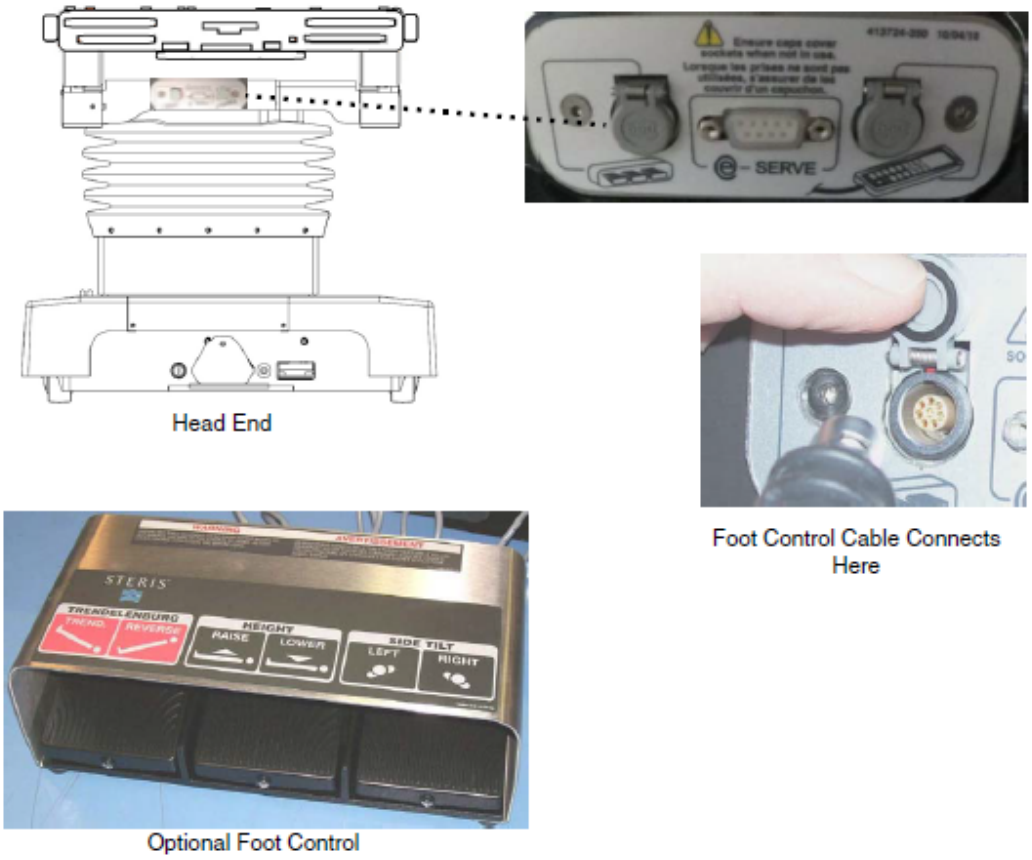

Figure 4-8. Connecting Optional Foot Control

Installing/Removing Table Pads

Conductive Tabletop Pads (see *Figure 4-9*) are one of two varieties (related to tabletop attachment):

- **Pads backed with hook-and-loop fastener strips, which mate to hook-and-loop strips on the tabletop.**
- **Pads with mushroom-type fasteners (non hook-and-loop)**

To install a table pad, place pad in position and firmly press associated fasteners together.

To remove a table pad, gently peel or lift the pad, as applicable, to free it from the tabletop.

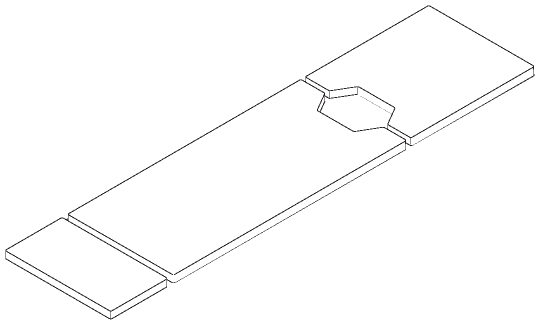

Figure 4-9. Tabletop Pads

Installing/Removing X-Ray Top

The Surgical Table is designed to enable installation of an X-Ray top to allow use of X-Ray cassette film. Attach the four-part X-Ray top as follows (see):

1. **Carefully remove X-Ray top sections from packing container.**
2. **Remove pads from tabletop (see *Installing/Removing Table Pads*).**
3. **Position X-Ray top section over corresponding tabletop section, aligning posts to mounting holes.**

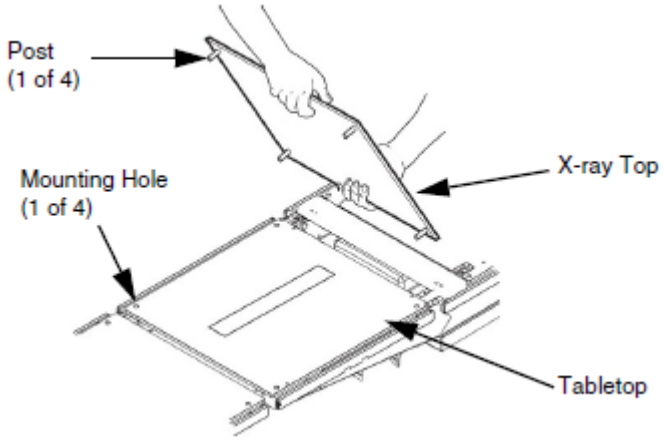

Figure 4-10. Aligning X-ray Top Posts to Mounting Holes

4. **Press down on X-Ray top section until a click is heard.**

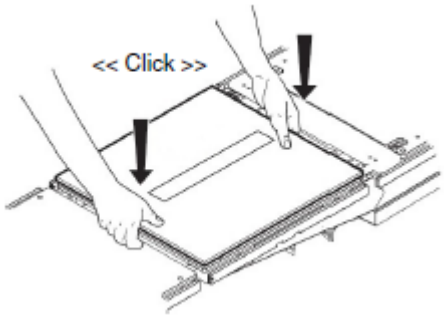

Figure 4-11. Snapping X-ray Top Into Position

5. **Ensure X-Ray top sections are securely mounted by gently pulling up on section.**
6. **Reinstall tabletop pads.**
7. **Remove and store X-Ray top by reversing above steps.**

Accessories/Side Rails

The standard STERIS permanently attached 3/8" wide x 1-1/8" tall (9.5 x 28.6 mm) side rails allow for the use of many standard surgery table attachments and accessories. The rails consist of one rail mounted to each side of each tabletop main section.

IMPORTANT: *Side Rail loading has been evaluated through cantilevered testing to support 200 ft-lb (271 N▪m) maximum. Any additional loading needs to consider Table stability.*

For complete information on accessory options, consult STERIS.

WARNING

PERSONAL INJURY HAZARD

When installing any table accessory, check for correct attachment and tighten securely (if appropriate). Do not use worn or damaged accessory. Check installation before using any accessory.

WARNING

INSTABILITY HAZARD

Possible patient or user injury, as well as Surgical Table or accessory failure, may result from using STERIS table accessories for other than their stated purpose or from using accessories manufactured and sold by other companies on STERIS surgical tables.

Table 4-1. Surgical Table Specific Accessories*

Accessory	Equipment Number
Foot Control	BF58–600
Hand Control (With Cord)	BF329
TLT Table Pads (Complete Set)	BF095
X-Ray Top (Complete Set)	BF219
Patient Safety Rail (With Cover)	BF092

* Contact STERIS for ordering information.

4.3 Primary Hand Control

This section includes:

Introduction

Hand Control Function Buttons Description

Hand Control LCD Display Description

Introduction

WARNING

PERSONAL INJURY AND/OR EQUIPMENT DAMAGE HAZARD

Patient or operator injury may result if the operator of this Table is not completely familiar with the controls for patient positioning and Table operation.

WARNING

PERSONAL INJURY HAZARD

⚠ Failure to engage the floor locks before placing a patient on or removing from the Table or disengaging the floor locks while a patient is on the Table during a surgical procedure could result in the Table rolling unexpectedly during the procedure.

CAUTION

POSSIBLE EQUIPMENT DAMAGE

⚠ Hang the hand control from side rail of the Surgical Table when not in use to avoid possible damage to the control.

If Primary Hand Control is not installed, plug the hand control into the appropriate socket of the Table column (refer to *Section 4.2, Installation*).

NOTE: Auto Limit Sensor (ALS) system provides instant user feedback on any conflicting tabletop articulations.

Hand Control Function Buttons Description

NOTE: The Primary Hand Control automatically deactivates after 30 minutes of nonuse (when unlocked) and 10 hours of nonuse (when locked). The Hand Control is reactivated by depressing **ANY** button but **STOP**.

The STERIS 5085 SRT Surgical Table is equipped with a Primary Hand Control (see). This Hand Control contains easy-to-read icons and illuminates the key pad for easy articulation identification when room is dark. For the Hand Control function buttons to be operational:

1. **The Table must be turned on.**
2. **The Hand Control must be turned ON. (Press ANY function button on the Hand Control except STOP; the keyboard backlighting system illuminates.)**

NOTE: Simply release the Hand Control touch pad when desired STERIS 5085 SRT Model Tabletop position has been reached and Table automatically stops and locks in position.

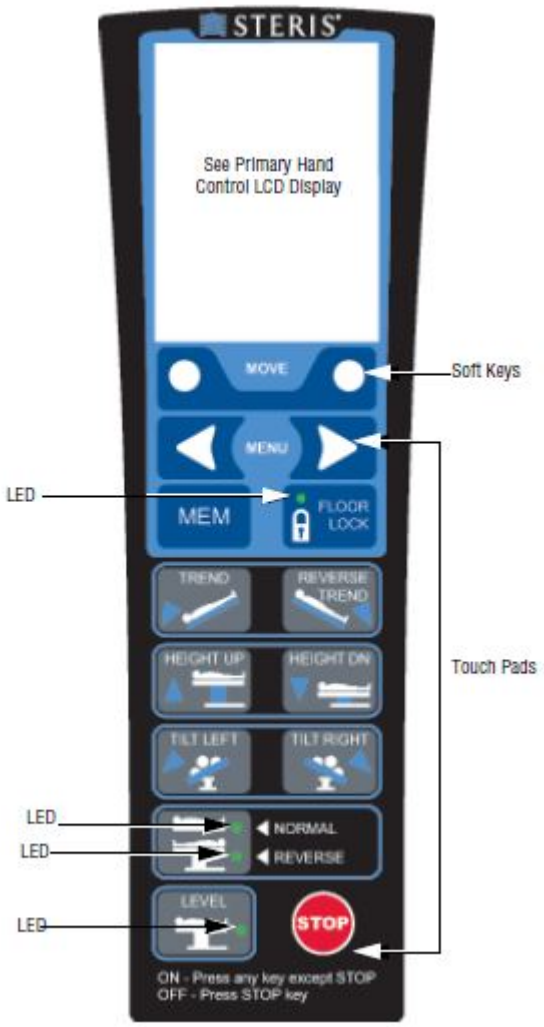

Figure 4-12. STERIS 5085 SRT Surgical Table Primary Hand Control

LCD Display: Liquid Crystal Display. Refer to *Section 2.3, Definition of Symbols on Hand Control*.

FLOOR LOCK: When LED is ON floor locks are engaged.

NORMAL: When LED is ON patient is oriented on tabletop in normal position. Refer to *Section 4.4, Reverse Patient Orientation*.

REVERSE: When LED is ON patient is oriented on tabletop in reverse position. Refer to *Section 4.4, Reverse Patient Orientation*.

LEVEL: When LED is ON tabletop is in level or zero position.

TREND: When touch pad is depressed, the head end of the tabletop lowers; or, foot end raises. The LCD Display TREND value changes accordingly.

REVERSE TREND: When touch pad is depressed, the head end of the tabletop rises; or, foot end lowers. The LCD Display TREND value changes accordingly.

HEIGHT UP: When touch pad is depressed, the **entire** tabletop rises. The LCD Display HEIGHT value changes accordingly.

HEIGHT DN: When touch pad is depressed, the **entire** tabletop lowers. The LCD Display HEIGHT value changes accordingly.

TILT LEFT: When touch pad is depressed, the tabletop rolls to the left (patient's left or viewing the table from the head end). The LCD Display LATERAL TILT value changes accordingly.

TILT RIGHT: When touch pad is depressed, the tabletop rolls to the right (patient's right or viewing the table from the head end). The LCD Display LATERAL TILT value changes accordingly.

MEM: Programmed (memory) positions in combination with LCD (i.e., Beach Chair and Rotate Mode).

MENU: LCD Display Menu navigation (forward and backward).

NOTE: The Hand Control automatically deactivates after 30 minutes of nonuse (when unlocked) and 10 hours of nonuse (when locked). The Hand Control is reactivated by depressing ANY button but STOP.

IMPORTANT: *When depressed, all Hand Control functions deactivate. All functions are stopped immediately.*

NOTE: It is highly recommended that the STOP button is pressed during any periods of Table inactivity to prevent inadvertent patient movements and to conserve battery power.

Hand Control LCD Display Description

The Primary Hand Control is equipped with a LCD Display (see *Figure 4-12*) to assist the user with Table operation. The LCD Display includes menus and indicator descriptions (see *Figure 4-13*) as follows:

NOTE: Simply release the Hand Control soft key or touch pad when desired Surgical Table position has been reached and Table automatically stops and locks in position.

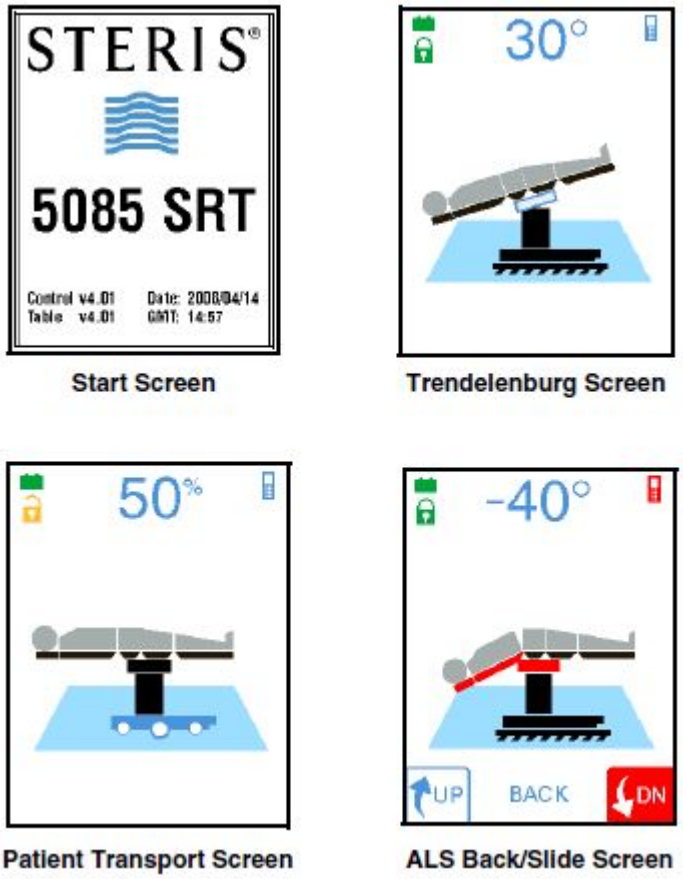

Figure 4-13. Primary Hand Control LCD Display Sample Displays

NOTE: Refer to **Glossary** section for definitions of the LCD Displays. The LCD Display values are approximate. Their accuracy may vary according to environmental conditions (e.g., altitude, humidity, temperature). Also, if a sensor is not operating properly, the value indicated is incorrect. Check patient positioning visually before proceeding.

SLIDE: After selecting the function via the menu, press the appropriate touch pad to choose HEAD or FOOT direction.

Zip-Slide™ moves tabletop toward desired end and screen shows movement. The LCD Display SLIDE value changes accordingly. When slide returns to central "00" position, **movement stops for one-half second before continuing**. Slide motion is limited to 2.5" (64 mm) in direction of short end of table base when table is unlocked.

LEVEL: After selecting the function via the Primary Hand Control, press the appropriate touch pad. Tabletop is gradually returned to level or horizontal position by aligning the tabletop sections in the following order:

- **Kidney Elevator Mechanism and lateral tilt;**
- **Trendelenburg and back;**
- **Leg.**

The LCD Display pictorials and values change accordingly.

NOTE: When operating in REVERSE ORIENTATION, **LEVEL** function does NOT operate.

TREND: When primary hand control touch pad is depressed, the LCD Display pictorials and values change accordingly. Tabletop angle from 0 to 30°.

TILT: When primary hand control touch pad is depressed, the LCD Display pictorials and values change accordingly. Tabletop angle from 0 to 20°.

HEIGHT: When primary hand control touch pad is depressed, the LCD Display pictorials and values change accordingly. Tabletop height from 22.8 to 42.5" (581 to 1080 mm).

KIDNEY: After selecting the function via the menu, press the appropriate touch pad. Tabletop Kidney™ Elevator Mechanism raises or lowers up to the maximum 4" (110 mm). The LCD Display pictorials and values change accordingly.

LEG: After selecting the function via the menu, press the appropriate touch pad. Tabletop leg section raises (0°) or lowers (105°) in relation to the level seat section. The LCD Display pictorials and values change accordingly.

FLEX: After selecting the function via the menu, press the appropriate touch pad. Back section moves down and tabletop moves into Reverse Trendelenburg position. The LCD Display pictorials and values change accordingly.

NOTE: In reverse configuration, FLEX function is NOT available for patient safety. Reverse orientation appears in the LCD Display and hand control LED is ON.

REFLEX: After selecting the function via the menu, press the appropriate touch pad. Back section moves up and tabletop moves into Trendelenburg position. The LCD Display pictorials and values change accordingly.

NOTE: In reverse configuration, REFLEX function is NOT available for patient safety. Reverse orientation appears in the LCD Display and hand control LED is ON.

BACK: After selecting the function via the menu, press the appropriate touch pad for up or down. Tabletop back section raises (0 to 82°) or lowers (0 to 40°) angle movement in relation to the level seat section. The LCD Display pictorials and values change accordingly.

FLOOR LOCKS: After selecting the function via the menu, press the appropriate touch pad. The LCD Display pictorials and values change accordingly.

NOTE: The table can articulate when the floor locks are disengaged; slide motion is limited.

LCD Status Indicators: Many LCD Display pictorials include the following status indicators (refer to **Glossary** section):

NOTE: When REVERSE Patient is selected, the displayed body on the LCD screens is in correct orientation.

- **Battery or Plug Icon - indicates the Table is receiving power from either the Table batteries (battery icon) or Facility power (plug icon).**
- **Clasp Lock Icon - indicates the Table floor locks are engaged or not (lock or open lock icons).**
- **Beach Chair Icon - indicates Amsco™ Beach Chair accessory is attached to the Leg Section receptacles.**

  NOTE: User must configure Hand Control when this accessory is used.
- **Wrench Icon - indicates an operational situation. When wrench icon is ON, the auto-diagnostic system has detected a situation. Check the LCD Display for more information on the nature of the situation. Press STOP touch pad and then start the primary hand control again to see if the situation disappears. If not, refer to Troubleshooting section, for more information.**

NOTE: The Hand Control automatically deactivates after 30 minutes of nonuse (when unlocked) and 10 hours of nonuse (when locked). The Hand Control is reactivated by depressing **ANY** button but **STOP.**

WARNING

PERSONAL INJURY AND/OR EQUIPMENT DAMAGE HAZARD

⚠ The Auto Limit Sensors (ALS) System indicated potential collisions may not have complete data of the surgical environment. Surgical staff should therefore use professional judgement and common sense in evaluating whether to implement a suggestion.

Auto Limit Sensors (ALS) Warning: indicates the tabletop has been ordered into a configuration or has moved into a position that may cause tabletop damage or patient injury. This feedback is from the Auto Limit Sensor™ (patent pending) control device system. To prevent a tabletop sectional conflict, or collision of tabletop with the Table or floor, ALS System immediately stops the movement in process and the pictorial goes red. The control system alerts the user to an alternative movement choice in the pictorial.

NOTE: The ALS System suggested alternative movement is not the only movement available.

4.4 Reverse Patient Orientation

WARNING

PERSONAL INJURY AND/OR EQUIPMENT DAMAGE HAZARD

- Never transport patient in reverse orientation except when used with beach chair accessory. Serious patient injury can occur.

⚠

- With patient in normal or reverse orientation, Surgical Table in Trendelenburg and slide at head limit, center tabletop before attempting to raise Table to level or move into Reverse Trendelenburg.
- Do not exceed 350 lb (159 kg) on Leg Section.

Definition: Headrest attached to leg section and patient oriented with head on headrest.

Some surgeries (e.g., shoulder) require the patient to be in reverse positioning and the Surgical Table to be operated in a reverse configuration. Press **REVERSE Patient** touch pad on the Primary Hand Control (refer to **Glossary** section), **REVERSE** LED should light. Press touch pad again to cancel Reverse Orientation function and **NORMAL** LED should light.

When **Reverse Patient** touch pad is pressed, all other Hand Control commands (through the control system) note the new patient head position. Trendelenburg and Lateral Tilt movements and Back and Leg Sections are automatically reversed.

IMPORTANT: *When using the* ***Reverse Patient*** *touch pad, note the following:*

1. ***When Table is turned OFF, control system stores orientation status. Before any new positioning is attempted, ensure Table patient configuration is correct.***
2. ***The S Surgical Table Drive Head Section is manually adjusted and will not be affected by Reverse Patient touch pad operation. Reverse Orientation does not change Drive System Rocker Switch Orientation.***
3. ***FLEX and REFLEX functions are NOT available for patient safety.***
4. ***When operating in REVERSE ORIENTATION, LEVEL function does NOT operate.***
5. ***The Hand Control automatically deactivates after 30 minutes of nonuse (when unlocked) and 10 hours of nonuse (when locked). The Hand Control is reactivated by depressing ANY button but STOP.***

4.5 Optional Foot Control Operation

This Surgical Table can be operated using the optional foot control which allows operator to control HEIGHT, TREND, and TILT movements. It is important to note that when using the hand control and optional foot control at the same time, the **hand control has priority**. Also, if the hand control **STOP** button is pressed, foot control also switches OFF. To operate the foot control:

1. **Press and release any positioning pedal (on foot control) to switch Table control ON.**

   NOTE: If the hand control is also attached, PEDAL ON appears on the LCD Display message window.
2. **Operate HEIGHT, TREND, and TILT pedals as needed.**
3. **After unplugging foot control from Table, put protective cover over connector.**

4.6 Backup Control System

This section includes:

Introduction

System Operation

Backup Hand Control Description

Return Backup Control System

WARNING

PERSONAL INJURY AND/OR EQUIPMENT DAMAGE HAZARD

- ALS System is not active during backup control. Ensure proper tabletop movements to prevent patient/staff injury and/or equipment damage.
- During backup control, tabletop functions are available even if Table floor locks are NOT engaged. LOCK Table before moving tabletop or transferring patient.

Introduction

This Surgical Table is equipped with a backup hand control system. This system can be actuated at any time and allows Table operation in the event of primary control malfunction. A pedal (foot pump to provide hydraulic power) and Backup Hand Control are located in the Table base behind a cover panel and are used for Table movements.

NOTE: The Surgical Table Drive Head Section must be manually adjusted.

System Operation

To operate system, proceed as follows:

1. **Flip pedal down (see).**
2. **Pull drawer out and remove backup hand control.**
3. **Return drawer to Table.**
4. **To operate Table functions, pump pedal while pressing desired function button on backup hand control (see).**

NOTE: When using the backup control system, note the following:

1. **For FLOOR UNLOCK and SLIDE HEAD/FOOT functions, it is not necessary to pump pedal.**
2. **Pressing any touch pad on the backup hand control deactivates Primary Hand Control.**
3. **When any key is pressed on backup hand control, the green LED (see) should light indicating system is active.**
4. **The ALS System is NOT active during backup control operation.**
5. **During backup, operation with Floor Locks disengaged IS active within full articulation limits. Engage Floor Locks before moving tabletop to prevent unsafe tipping situations.**
6. **Reverse Orientation is NOT available in backup control operation. If patient was in reverse orientation when backup control was activated, Operator must mentally change TREND to REVERSE TREND, TILT LEFT to TILT RIGHT, etc.**



Figure 4-14. Backup Control System

Backup Hand Control Description

The backup hand control touch pad descriptions are as follows ():

NOTE: Simply release the backup hand control touch pad when desired Tabletop position has been reached and Table automatically stops and locks in position.



Figure 4-15. Backup Hand Control

SLIDE HEAD: When depressed, Zip-Slide moves tabletop toward head end.

SLIDE FOOT: When depressed, Zip-Slide moves tabletop toward foot end.

BACK UP: When depressed and pumping simultaneously, the tabletop back section raises.

BACK DN: When depressed and pumping simultaneously, the tabletop back section lowers.

LEG UP: When depressed and pumping simultaneously, the tabletop leg section raises.

LEG DN: When depressed and pumping simultaneously, the tabletop leg section lowers.

TREND: When depressed and pumping simultaneously, the head end of the tabletop lowers; or, foot end raises.

REVERSE TREND: When depressed and pumping simultaneously, the head end of the tabletop rises; or, foot end lowers.

HEIGHT UP: When depressed and pumping simultaneously, the **entire** tabletop rises.

HEIGHT DN: When depressed and pumping simultaneously, the **entire** tabletop lowers.

TILT LEFT: When depressed and pumping simultaneously, the tabletop rolls to the left (patient's left or viewing the table from the head end).

TILT RIGHT: When depressed and pumping simultaneously, the tabletop rolls to the right (patient's right or viewing the table from the head end).

KIDNEY UP: When depressed and pumping simultaneously, the tabletop KIDNEY Elevator raises up to the maximum 4" (110 mm).

KIDNEY DN: When depressed and pumping, the tabletop KIDNEY Elevator Mechanism lowers.

FLOOR LOCK: When depressed and pumping simultaneously, floor locks are slowly lowered. To ensure Table is correctly secured to the floor, gently push on Table.

NOTE: During Backup Operation with Floor Locks disengaged, tabletop functioning IS active. Engage Floor Locks before moving tabletop to prevent unsafe tipping situations. BEFORE disengaging Floor Locks, ensure tabletop is centered.

FLOOR UNLOCK: When depressed, floor locks are slowly released. To ensure floor locks are completely disengaged, gently push on Table.

NOTE: If Backup operation is necessary when drive wheel is engaged, pressing FLOOR UNLOCK while pumping foot pedal retracts drive wheel.

STOP: When touch pad is depressed, all hand control functions deactivate. All functions are stopped immediately.

Return Backup Control System

When situation has been corrected and normal Table operation is available, replace backup control system as follows (see):

1. **Pull drawer out from Table base.**
2. **Place backup hand control in drawer.**
3. **Wind cable and place in drawer.**
4. **Push drawer back into Table base.**

   NOTE: When returning drawer to Table base, ensure cable is not jammed.
5. **Fold pedal back to original position.**

4.7 Drive Head Section

This section includes:

Introduction

Dynamic Braking

Introduction

WARNING

PERSONAL INJURY AND/OR EQUIPMENT DAMAGE HAZARD

- Never transport patient in reverse orientation except when used with beach chair accessory. Serious patient injury can occur.
- If transporting patient requires use of elevator, ensure elevator capacity for Table, patient, and staff is adequate.

WARNING

PERSONAL INJURY HAZARD

- Ensure patient safety barrier bars are raised and locked and Surgical Table is unplugged before attempting patient transport.
- Do NOT transport patient on anything but level floor.

CAUTION

POSSIBLE EQUIPMENT DAMAGE

When moving the Surgical Table to or from point of use, roll or power it carefully at moderate speed and only over smooth floors. Maximum floor clearance is 1/4" (6.4 mm). Avoid door and elevator jambs, and obstructions greater than 1/4" (6.4 mm). If necessary, lift table over obstructions, onto trucks, etc. Lift table evenly and only by the table base. DO NOT transport articles (including accessories) on top of the table, and **DO NOT use a forklift to move the uncrated table**.

The Drive Head Section is a cordless removable manually operated tabletop section containing the user Patient Transport controls. The Drive Head Section (see *Figure 4-16*) incorporates two controls: a drive engage/disengage pushbutton (when user pushes the button the drive wheel engages) and direction rocker switch (forward and reverse). The Drive Head Section also incorporates a blue center latch (release handle) permitting the user to articulate the head section from +60° to -90° in 10° increments. For added security, the Drive Head Section has a double locking feature preventing section from inadvertent removal. Refer to *Section 5.3, Patient Transport Mode*, for steps required for patient transport.

NOTE: If Direction Button is pressed before ENABLE TRANSPORT Button is pressed, Direction Button is ignored until returned to center (neutral) position and then pressed toward forward (FWD) or reverse (REV).

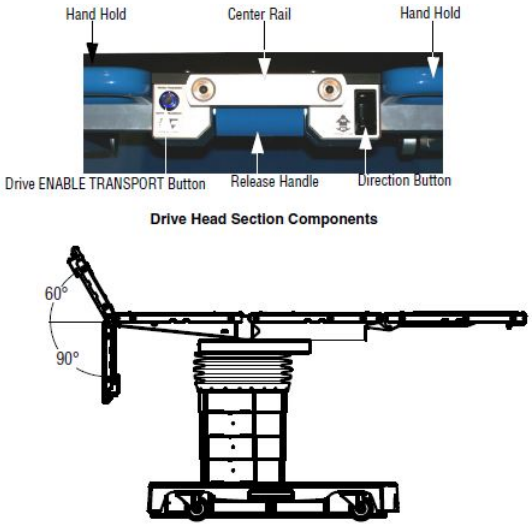

Figure 4-16. Drive Head Section Operation (Typical)

NOTE: The Direction Button is designed for finite speed control. The further the button is depressed, the faster the output ordered speed (i.e., fully depressed equals top speed).

Dynamic Braking

During normal patient transport forward (Direction Button pressed forward), if Direction Button is released while still pressing ENABLE TRANSPORT button, Surgical Table coasts to a stop. If during normal patient transport forward, drive or dynamic braking is required, continue holding Direction Button in forward position and release ENABLE TRANSPORT button. Surgical Table uses drive wheel as a dynamic brake to help slow Table in less than two feet (0.6 meters).

4.8 Table Limits

This section includes:

Essential Performance

Transport Mode

Rotate Mode

Beach Chair Mode

Normal Mode Limits

Essential Performance

Essential Performance for Surgical Tables:

1. **Support a patient without unwanted movement under single fault conditions.**
2. **Single fault conditions can include electrical, electromagnetic effects, or mechanical problems.**
3. **In extreme cases of electromagnetic interference, operator may experience temporary loss of Table function. This situation can be corrected by removing source of interference and power cycling Surgical Table if necessary.**

Transport Mode

WARNING

PERSONAL INJURY AND/OR EQUIPMENT DAMAGE HAZARD

- Hand Control must be attached to Surgical Table all times to enable safety stop and all modes of operation.
- Attempting Manual Rotating Mode while Surgical Table is in Drive Limits increases possibility of unwanted Table Transport movement.

WARNING

PERSONAL INJURY HAZARD

- Ensure patient safety barrier bars are raised and locked and Surgical Table is unplugged before attempting patient transport.
- Do NOT transport patient on anything but level floor.

Before this Surgical Table may be used for Patient Transport (Drive Enable button solid blue light), the control ensures the Table meets the following minimum requirements:

NOTE: If Primary Hand Control LCD displays sensor failure (red wrench 12, 13, 14 or 17), patient transport is NOT available.

- **Height less than or equal to 35" (889 mm).**
- **Trendelenburg/Reverse Trendelenburg range ± 10° from level.**
- **Tilt range ± 10° from level.**
- **Slide ± 1" (25 mm) from center.**

- **Back Section +30 to -10° from level.**
- **Leg Section:**
  - **if attached: 0 to -10° from level.**
  - **if not attached and no beach chair: 0 to -105° from level.**
  - **with beach chair: -60 to -105° from level.**
- **Floor Locks disengaged.**

Rotate Mode

Before this Surgical Table may be used for any procedures requiring rotate (Drive Enable button flashing blue light), the control ensures the Table meets the following minimum requirements:

NOTE: If Primary Hand Control LCD displays sensor failure (red wrench 12, 13, 14 or 17), rotate mode is NOT available.

- **Height less than or equal to 42.5" (1080 mm).**
- **Trendelenburg/Reverse Trendelenburg range ± 10° from level.**
- **Tilt range ± 10° from level.**
- **Normal Orientation:**
  - **Slide within 2.5" (64 mm) from center toward short side of table base; within 9" (229 mm) from center toward long side of table base.**
  - **Back Section +60 to -10° from level.**
  - **if Leg Section attached and no Beach Chair mode: 0 to -10° from level.**
  - **if Leg Section is not attached and Beach Chair mode is 0 to -105°.**
- **Reverse Orientation:**
  - **Slide within ± 2.5" (64 mm) from center**
  - **Back Section +81 ± 1 to -40° from level.**
  - **if Leg Section is not attached and no Beach Chair mode: 0 to -105°.**
  - **Whenever in Beach Chair mode, Leg Section/leg receptacles range is 0 to -105°.**
- **Floor Locks disengaged.**

Beach Chair Mode

Beach Chair Mode places the Surgical Table in the following target positions:

- **Target position when GO key is pressed:**
  - **Back Section (patient's Leg Section) = -30°.**
  - **Trendelenburg = 10°.**
  - **Leg Section (patient's Back/beach chair angle = 60°) = -30°.**
- **Patient Orientation = Reverse (automatically changed).**
- **Floor Locks engaged.**

When in Beach Chair Mode, the following Table section ranges are possible:

- **Tilt = full range.**
- **Trendelenburg/Reverse Trendelenburg range = full range.**

- **Height = full range.**
- **Slide within ± 9” (229 mm) from center. However, ALS limits slide movement to prevent possible collisions.**
- **Back Section = Full range.**
- **Leg Section/Receptacles = 0 to -105° from level.**

Normal Mode Limits

When floor locks are engaged, all motions are full range.

When floor locks are disengaged, all motions are full range except slide which is limited to 2.5” (64 mm) travel toward short end of Surgical Table base.

Floor locks cannot be disengaged unless slide is less than 2.5” (64 mm) toward short end of Table base.

Surgical Table Operation

5.1 Introduction

IMPORTANT: *A listing of the SAFETY PRECAUTIONS to be observed when operating and servicing this equipment can be found in* ***Safety Precautions and Pinch Points*** *section of this manual. Do not operate or service the equipment until you have been fully trained on this information.*

NOTE: Uses other than as specified and described in this section are not recommended and may not be safe. This Surgical Table is to be operated only by users who have successfully completed an Operator Training Course. For specific set-ups, refer to the Set-Up Guide. Please contact STERIS for appropriate guidance, in-service, and training.

5.2 Table Preparation

WARNING

PERSONAL INJURY HAZARD

- Healthcare professionals must ensure patients are positioned and monitored to prevent compromising respiration, nerve pathways, or circulation.
- Patient must be secured to the Surgical Table in accordance with recommended positioning practices. Unanticipated patient or table movement could result in death or serious injury.
- If the integrity of the external protective ground installation or arrangement is in doubt, operate the Surgical Table from its internal power source.
- Do not exceed 350 lb (159 kg) on the leg section.
- If Hand Control LCD warns of sensor failure (red wrench 12, 13, 14 or 17), Surgical Table movement collision can occur.

WARNING

PERSONAL INJURY AND/OR EQUIPMENT DAMAGE HAZARD

- Surgical Table is factory set to operate at a certain voltage. Use of any other power supply could result in serious personal injury or Table damage.
- Use of this Surgical Table in the presence of flammable anesthetics could result in serious personal injury and/or table damage.
- Hand Control must be attached to Surgical Table all times to enable safety stop and all modes of operation.

Placing a patient in normal or reverse orientation whose weight exceeds maximum patient weight limit of:

- 1200 lb (544 kg) with the ability to rotate and raise/lower Table but no tabletop articulation or slide, or
- 1000 lb (454 kg) with the ability to rotate and all patient posturing but without tabletop slide, or
- 600 lb (272 kg) with the ability to rotate, all patient posturing, transport feature (normal orientation only) and tabletop slide, could result in injury to the patient and the operating room staff, and serious equipment damage.

WARNING

TIPPING HAZARD

- Do not transfer patient onto or off of the Surgical Table unless floor locks are engaged.
- Do not use this Surgical Table for patients exceeding the maximum patient weight of:
- Center tabletop over column before applying chest compressions.

Do not use this Surgical Table for patients exceeding the maximum patient weight of:

- 1200 lb (544 kg) with the ability to rotate and raise/lower Table but no tabletop articulation or slide.
- 1000 lb (454 kg) with the ability to rotate and all patient posturing but without tabletop slide.
- 600 lb (272 kg) with the ability to rotate, all patient posturing, transport feature (normal orientation only) and tabletop slide.

Prepare this Surgical Table for operation as follows:

1. Review Pinch Point Warnings as presented in Safety Precautions and Pinch Points section of this manual.
2. This Surgical Table is equipped with INTELLIPOWER® dual power system. If table is to be operated on battery power, proceed to *Step 4*.

   NOTE: For more information on the battery system, refer to *Section 7.5, Battery Charging*.
3. Verify power cord is plugged into both the Facility outlet and Surgical Table receptacle and Main Power Switch is in ON position.

   NOTE: For cord connected Surgical Tables, the power cord attachment plug is to be used as a disconnect from Facility power. The Surgical Table must be positioned so plug is not difficult to reach.
4. For optimum performance, before attempting to operate table, allow Table to reach room temperature.
5. Position tabletop to LEVEL.

CAUTION

POSSIBLE EQUIPMENT DAMAGE

⚠ Do not use any headrest other than the 5085 SRT Headrest on this Surgical Table. Use of any unapproved accessory damages Table electronics.

NOTE: If the Primary Hand Control AND physician-controlled foot control are installed, Primary Hand Control has priority. Also, the Surgical Table Drive Head Section is manually adjusted as follows (if Drive Head Section is not installed, refer to *Section 4.2, Installation*):

   a. The head section may be positioned UP 60° and DOWN 90° from horizontal (level) in 10° increments.
   b. While holding head section securely in one hand, pull blue release handle (spring loaded) located under head section center rail and tilt head section to desired angle (level in this case).
   c. Release handle to lock head section at desired angle. Move headrest slightly until headrest is locked in position.

6. Engage floor locks by first pressing Primary Hand Control FLOOR LOCK touch pad, floor lock ICONS appear above right and left dots. Press dot soft key below locked ICON. Verify LED lights on Primary Hand Control.
7. Before placing patient in normal or reverse orientation on table, ensure patient does not exceed maximum patient weight limit of:
   - 1200 lb (544 kg) with the ability to rotate and raise/lower table but no tabletop articulation or slide.
   - 1000 lb (454 kg) with the ability to rotate and all patient posturing but without tabletop slide.
   - 600 lb (272 kg) with the ability to rotate, all patient posturing, transport feature (normal orientation only) and tabletop slide.

WARNING

PERSONAL INJURY AND/OR EQUIPMENT DAMAGE HAZARD

⚠ Never transport patient in reverse orientation except when used with beach chair accessory. Serious patient injury can occur.

---

8. Assuming patient weight does not exceed table weight capacity, transfer or position patient and ensure patient is properly restrained.
9. When in MEM Mode (TRANSPORT, ROTATE, BEACH CHAIR, DETACH BEACH CHAIR, MEM1, MEM2), note the following:
   a. LEVEL, MEM, NORMAL/REVERSE and FLOOR LOCK keys cannot be used.

b. **Once left dot (GO) key is pressed for Transport, Rotate, Beach Chair and Detach Beach Chair Modes, left and right arrow keys are not allowed.**

c. **Basic movement keys (Height/TREND/REVERSE TREND/TILT) are active until moving Table section (except SLIDE) is within -2 (degrees/inches/cm) of the limits set for MEM MODE.**

NOTE: A patient grounding post/potential equalization terminal (male connector, DIN 42801) is provided. The mating female connector for patient grounding is not furnished by STERIS.

5.3 Patient Transport Mode

Ensure the Surgical Table is ready for patient transport as follows:

NOTE: If Hand Control LCD displays sensor failure (red wrench 12, 13, 14, 15, 17 or 18), patient transport is NOT available.

WARNING

PERSONAL INJURY AND/OR EQUIPMENT DAMAGE HAZARD

- Hand Control must be attached to Surgical Table all times to enable safety stop and all modes of operation.
- If transporting patient requires use of elevator, ensure elevator capacity for Table, patient, and staff is adequate.
- Never transport patient in reverse orientation except when used with beach chair accessory. Serious patient injury can occur.

WARNING

PERSONAL INJURY HAZARD

- Ensure patient safety barrier bars are raised and locked and Table is unplugged before attempting patient transport.
- Do NOT transport patient on anything but level floor.

1. **Ensure Drive Head Section is properly installed (refer to *Section 4.2, Installation*).**
2. **Unplug Surgical Table from Facility power.**
3. **Verify Table batteries are charged and Table is ON.**
4. **Ensure Table meets Transport Limits (refer to *Section 4.8, Table Limits*).**
5. **Patient is properly positioned with safety barrier bars raised and locked.**
6. **Hand Control is attached to the Drive Head Section center rail.**
7. **Transport patient as shown in *Figure 5-1* (Automatic Mode) or *Figure 5-2* (Manual Mode).**

NOTE: During Transport Mode, Surgical Table is NOT to be used on an inclined surface.

Table 5-1. ICON Structure

ICON Structure	Definition
Outlined in Blue	Table Part Moving
Solid, Black	Table Part(s) Not Involved in Function
Solid, Blue	Table Part(s) Selected, No Movement
Solid, Red (Blinking and Not)	Table Part(s) Selected Cannot Move as Directed

NOTE: When in Automatic Transport Mode (MEM TRANSPORT MODE), press right dot (EXIT) key to exit mode. Basic movement keys are now active.

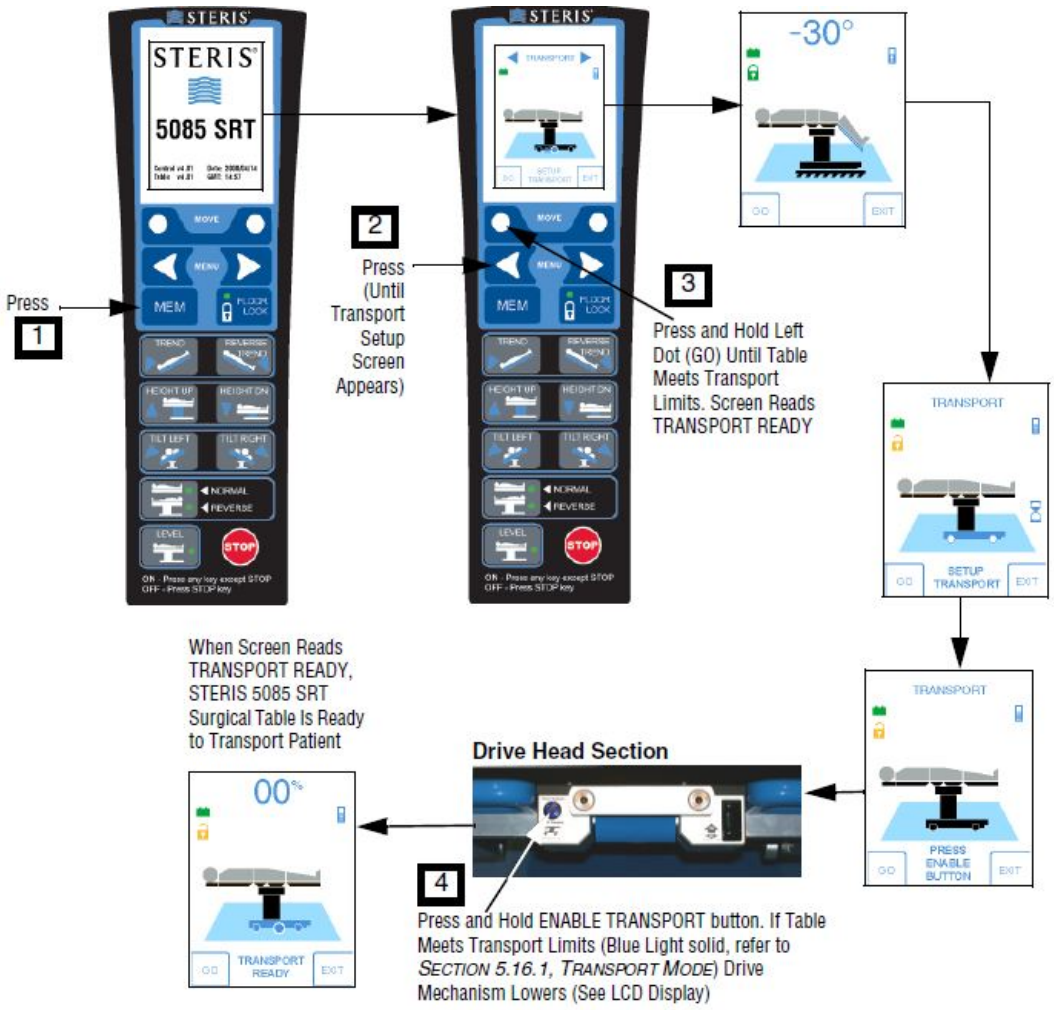

Figure 5-1. Patient Transport, Automatic Mode

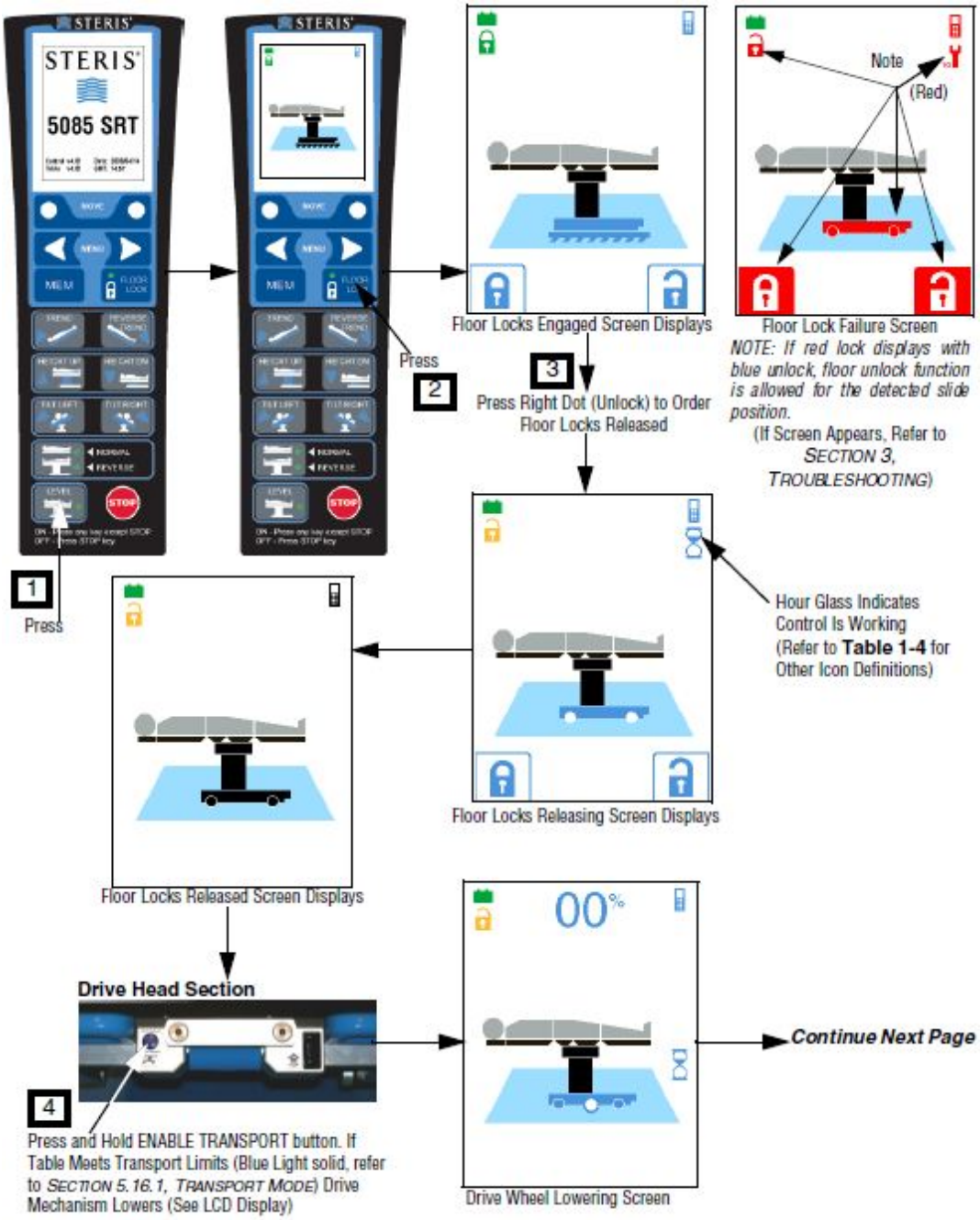

Figure 5-2. Patient Transport, Manual Mode (Part 1 of 2)

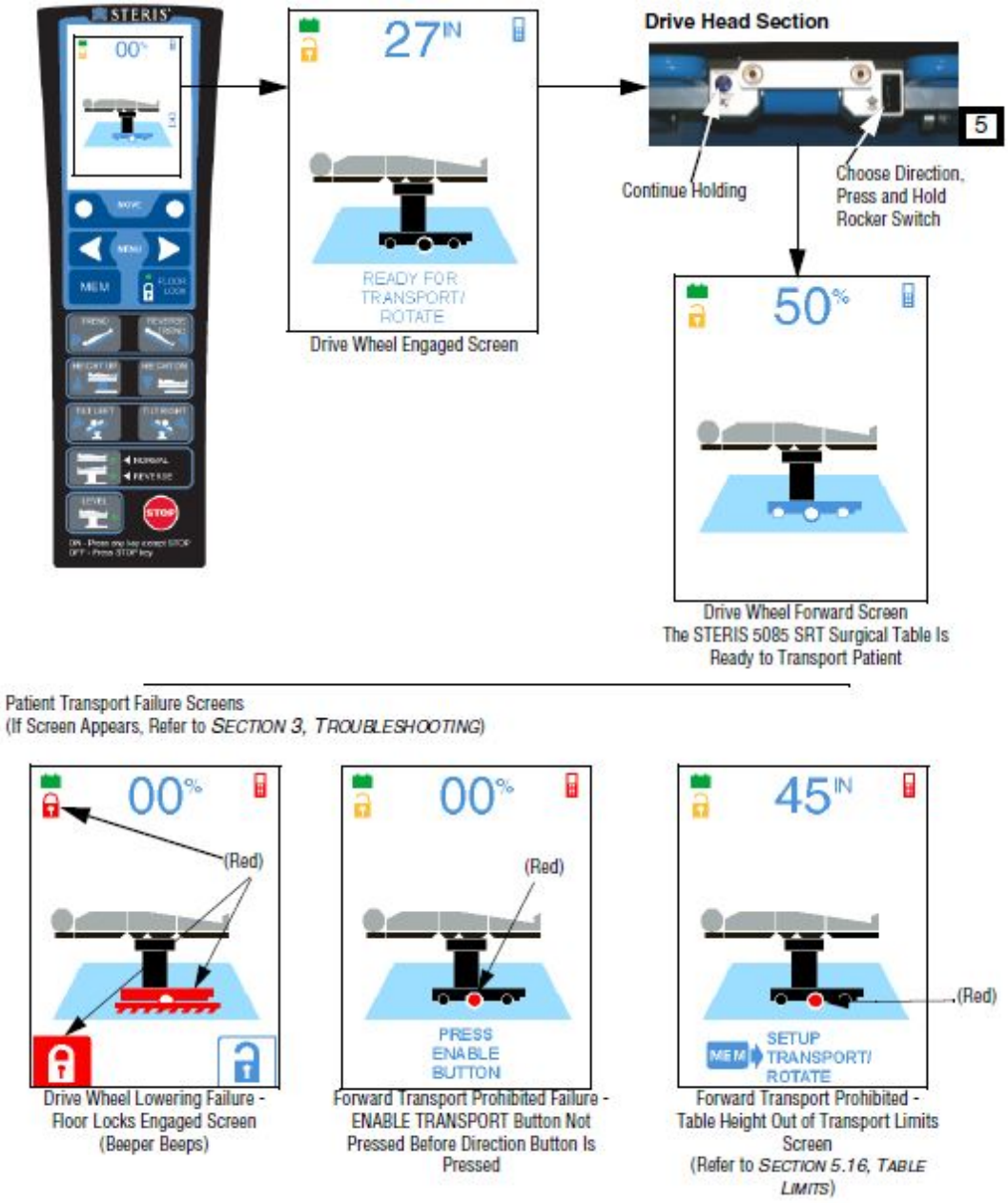

Figure 5-3. Patient Transport, Manual Mode (Part 2 of 2)

5.4 Rotate Mode

Ensure the Surgical Table is ready for rotation as follows:

NOTE: If Hand Control LCD displays sensor failure (red wrench 12, 13, 14, 15, 17 or 18), rotate mode is NOT available.

1. **Ensure Drive Head Section is properly installed (refer to *Section 4.2, Installation*).**
2. **Unplug Surgical Table from Facility power.**
3. **Verify Table batteries are charged and Table is ON.**
4. **Patient is properly positioned and restrained.**

5. **Hand Control is attached to the Drive Head Section center rail.**
6. **Rotate patient or table as shown in *Figure 5-4* (Automatic Mode) or *Figure 5-5* (Manual Mode).**

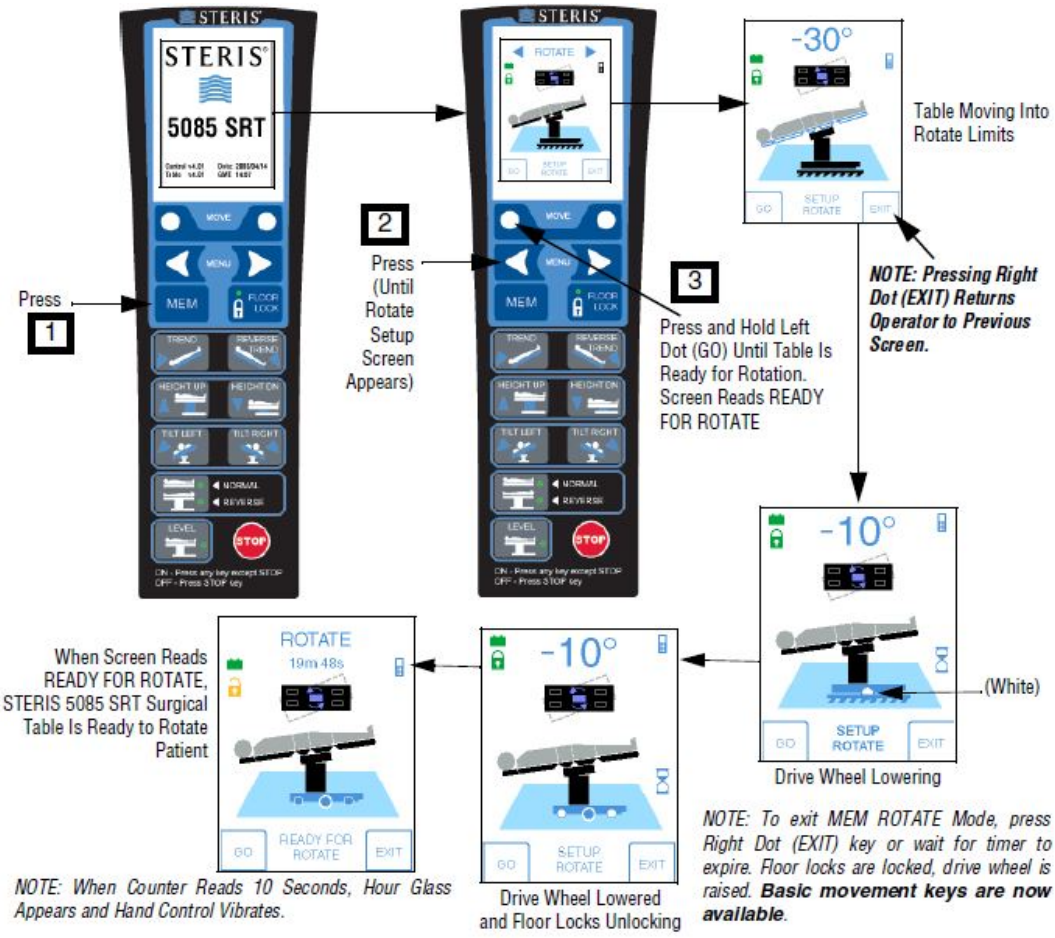

Figure 5-4. Table Rotate Function, Automatic Mode

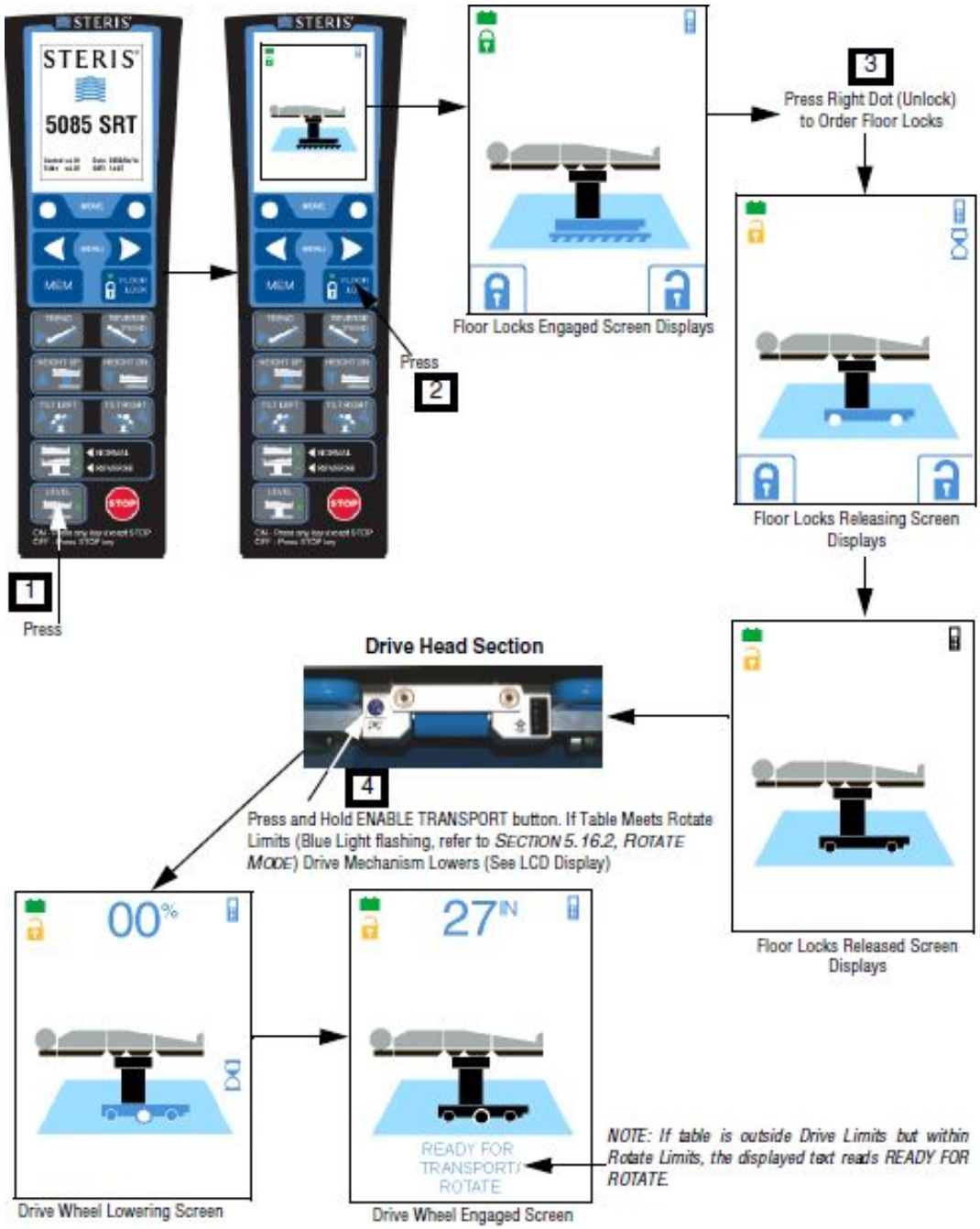

Figure 5-5. Table Rotate Function, Manual Mode

5.5 Beach Chair Mode

Ensure the Surgical Table is ready for operation in Beach Chair Mode as follows:

1. **Ensure Drive Head Section is properly installed (refer to *Section 4.2, Installation*).**
2. **Unplug Surgical Table from Facility power.**
3. **Verify Table batteries are charged and Table is ON.**
4. **Ensure Amsco® Beach Chair (or Shoulder Chair) is installed per Operator Manual (refer to P150832310).**

5. **Patient is properly positioned.**
6. **Hand Control is attached to a Table side rail within easy reach of operator.**
7. **Position Surgical Table into Beach Chair Mode as shown in *Figure 5-6*.**

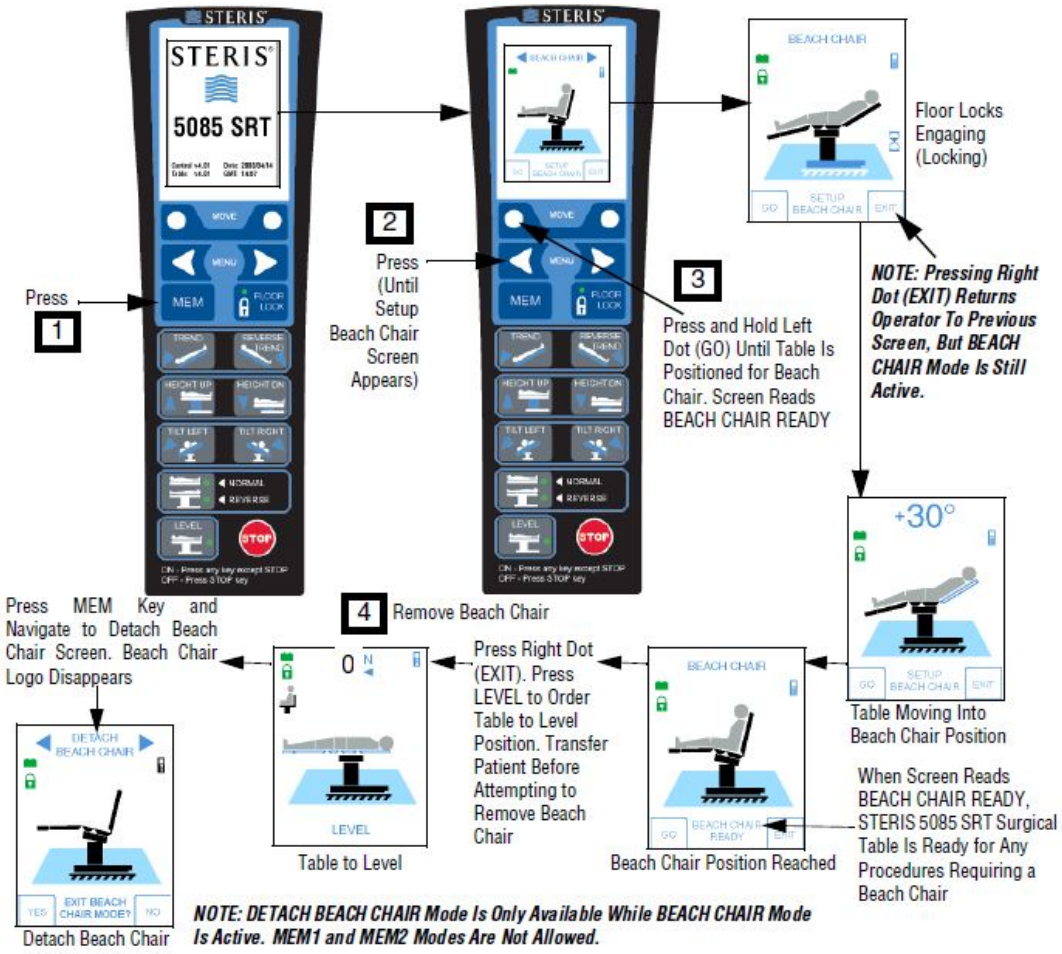

Figure 5-6. Table Beach Chair Function, Automatic Mode

5.6 Level Table Function

Ensure the Surgical Table is ready for operation as follows:

1. **Ensure Drive Head Section is properly installed (refer to *Section 4.2, Installation*).**
2. **Unplug Surgical Table from Facility power.**
3. **Verify Table batteries are charged and Table is ON.**
4. **If patient is on Table, ensure patient is properly positioned.**
5. **Hand Control is attached to a Table side rail within easy reach of the operator.**
6. **Pressing LEVEL button on Primary Hand Control orients Surgical Table in level orientation as shown in *Figure 5-7*.**

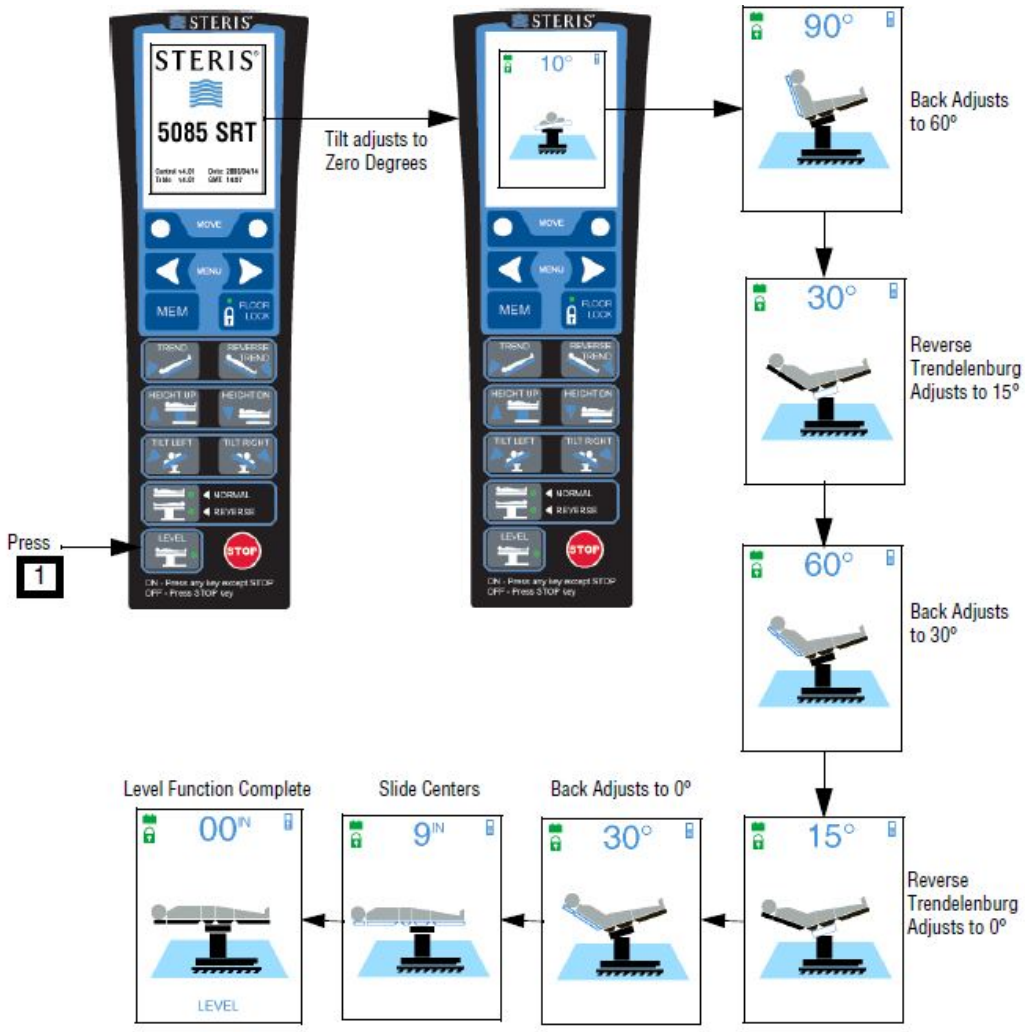

Figure 5-7. Level Table Function (Typical)

5.7 Record (Memory) Modes

Ensure the Surgical Table is ready for operation as follows:

1. **Ensure Drive Head Section is properly installed (refer to *Section 4.2, Installation*).**
2. **Unplug Surgical Table from Facility power.**
3. **Verify Table batteries are charged and Table is ON.**
4. **If patient is on Table, ensure patient is properly positioned.**
5. **Hand Control is attached to a Table side rail within easy reach of the operator.**
6. **Pressing MEM button then Back Arrow button on Primary Hand Control until MEM1 or MEM2 Select Screen appears as shown in *Figure 5-8*.**

   NOTE: If recorded position doesn't exist, move Table into wanted position and press Right Dot (REC). Beeper sounds when recording is complete.

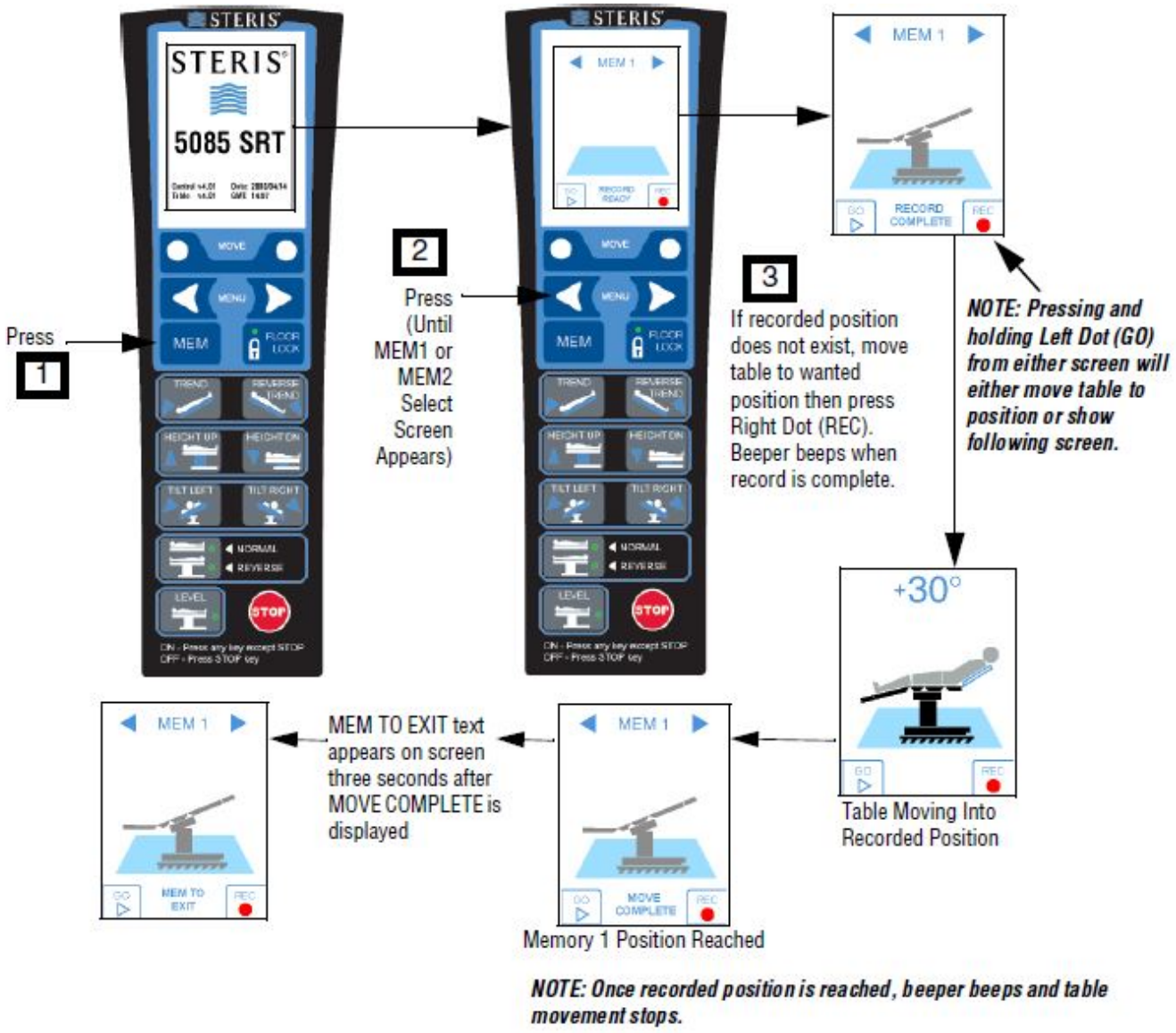

Figure 5-8. Record Function (Typical)

Troubleshooting

6.1 Introduction

IMPORTANT: *A listing of the SAFETY PRECAUTIONS to be observed when operating and servicing this equipment can be found in* ***SECTION 1*** *of this manual. Do not operate or service the equipment until you have been trained on this information.*

WARNING

PERSONAL INJURY AND/OR EQUIPMENT DAMAGE HAZARD

- Repairs and adjustments to this equipment must be made only by STERIS or STERIS-trained service personnel. Maintenance performed by unqualified personnel or installation of unauthorized parts could cause personal injury, result in improper equipment performance, invalidate the warranty or result in costly damage. Contact STERIS regarding service options.
- Regularly scheduled preventive maintenance is required for safe and reliable operation of this equipment. Contact STERIS to schedule preventive maintenance.

WARNING

ELECTRIC SHOCK HAZARD

Unplug Surgical Table from Facility electrical supply and remove battery fuse before servicing. Always follow electrical safety-oriented work practice standards.

CAUTION

POSSIBLE EQUIPMENT DAMAGE

When moving the Surgical Table to or from point of use, roll or power it carefully at moderate speed and only over smooth floors. Maximum floor clearance is 1/4" (6.4 mm). Avoid door and elevator jambs, and obstructions greater than 1/4" (6.4 mm). If necessary, lift table over obstructions, onto trucks, etc. Lift table evenly and only by the table base. DO NOT transport articles (including accessories) on top of the table, and **DO NOT use a forklift to move the uncrated table**.

NOTE: Never permit unqualified persons to service the table.

This section describes the types of Surgical Table malfunctions most likely to occur, and probable causes and corrective actions. Use the included information to identify general problems and those indicated by the hand control LEDs and Wrench Symbol.

The Hand Control displays numeric error messages beside the Wrench Symbol when V2 table control board is installed in a Surgical Table. Numeric error codes persist during a key press for articulation related errors. Numeric error codes persist until the Surgical Table is powered off for errors related to system failures.*Figure 6-1* shows a typical error code display.

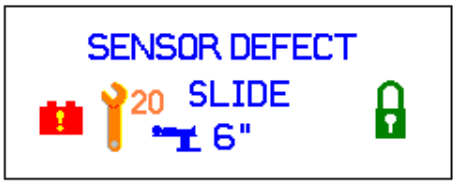

Figure 6-1. Example of Error Code Display - Error Code 20 Shown

If unable to correct the problem with the use of the included sections, or a problem occurs not described, please contact STERIS to arrange for a trained service technician to promptly place your equipment in proper working order.

Contacting STERIS: First, try to define the situation and determine whether you can solve it yourself using the supplied information in this section. If you cannot solve the situation, call STERIS and give the following information for the table: serial number, model number, date of purchase.

6.2 2 Red Control Icons and Beeps — ALM

Condition

2 Red Icons appear on Hand Control and alerter beeps.

General Troubleshooting	Additional Information
If the same icons, then two pushbuttons were pressed on the same Hand Control at the same time.	1. **Press STOP.** 2. **Press correct movement button (one button at a time).**
If they are different icons, then two movement commands are received from two different controllers.	1. **Press STOP.** 2. **Press correct movement button on correct controller.**
Pushbutton(s) defective on the Hand Control.	1. **Replace Hand Control.**

6.3 ALS Alarm When Raising Back Section - nonALM

Condition

ALS alarm occurring when raising back section with kidney bridge down.

General Troubleshooting	Additional Information
Problem with Kidney Bridge.	1. **Contact STERIS.**

6.4 Bad Version — ALM

Condition

Message appears on Hand Control — Bad Version.

General Troubleshooting	Additional Information
Hand Control software version is incompatible with control board software version.	1. **Contact STERIS.**

6.5 Batt Defect — ALM

Condition

Message appears on Hand Control — Batt Defect.

General Troubleshooting	Additional Information
Battery operating outside nominal voltage range.	1. **Contact STERIS.**

6.6 Batteries Do Not Charge - nonALM

Condition

Surgical Table operates correctly on both battery and Facility power but the batteries do not charge. Main Power Switch green LED is ON when power cord is plugged into appropriate Facility power and is ON.

General Troubleshooting	Additional Information
Line fuses (F6/F7) faulty.	1. **Replace line fuses (F6/F7).** 2. **If problem persists contact STERIS.**

6.7 Battery Fuse — ALM

Condition

Message appears on Hand Control — Battery Fuse.

General Troubleshooting	Additional Information
Missing or blown fuse.	1. **Check fuses. Replace as necessary.** 2. **Plug the power cord into Facility power.**

6.8 Battery Mode — ALM

Condition

Message appears on Hand Control — Battery Mode.

General Troubleshooting	Additional Information
Fuse F2 may be blown.	1. **Check F2 fuse. Replace as necessary.** 2. **If the problem persists, contact STERIS.**

6.9 Cannot Read Hand Control Display — nonALM

Condition

With Surgical Table plugged into facility power, hand control display cannot be read.

General Troubleshooting	Additional Information
Hand control is defective.	1. **Replace hand control.** 2. **If the problem persists, contact STERIS.**

6.10 Charger Defect — ALM

Condition

Message appears on Hand Control — Charger Defect.

General Troubleshooting	Additional Information
F1 fuse is blown.	1. **Check battery fuse. Replace fuse as necessary.**
Battery charger circuit in power supply requires inspection.	1. **Contact STERIS.**

6.11 Column Shroud Failure - nonALM

Condition

Failed or sticking column shrouds during raise and lower.

General Troubleshooting	Additional Information
Misaligned or damaged shrouds.	1. **Contact STERIS.**

6.12 Connect AC Power or Plug Mains — ALM

Condition

Message appears on Hand Control — Connect AC Power or Plug Mains.

General Troubleshooting	Additional Information
Battery voltage is below 19V.	1. **Plug table into Facility power.** 2. **Ensure switch is ON.** 3. **Ensure green AC LED is ON.** 4. **If the problem persists, contact STERIS.**

6.13 Dual Command — ALM

Condition

Message appears on hand control — Dual Command.

General Troubleshooting	Additional Information
Commands are sent from the optional foot pedal and the hand control at the same time.	1. **Hand control has priority.**

6.14 False ALS After Slide-to-Foot Articulation - nonALM

Condition

Articulation is performed followed by a slide-to-foot articulation, a false ALS alarm may occur.

NOTE:

This problem occurs only with the master control board.

General Troubleshooting	Additional Information
Electrical Issue	1. **Contact STERIS.**

6.15 Floor Lock Issue — nonALM

Condition

One floor lock is not operating or self-compensating floor locks extend fully lifting Surgical Table off all four casters.

General Troubleshooting	Additional Information
Internal leak in foot cylinder or floor lock manifold.	1. **Contact STERIS.**
Problem in control system.	1. **Contact STERIS.**

6.16 Hand Control Display Goes Blank During Master Control Program Download — nonALM

Condition

Hand Control Display goes blank during Master Control program download process.

General Troubleshooting	Additional Information
Cable connection and/or master control board requires inspection.	1. **Contact STERIS.**

6.17 Hand Control Does Not Activate — nonALM

Condition

Hand Control does not activate when Surgical Table is plugged into Facility power and any pushbutton (except **STOP**) is pressed.

General Troubleshooting	Additional Information
Main battery fuse is blown.	1. **Replace battery fuse.**
Faulty power cord.	1. **Replace power cord.**
Hand Control not plugged into Surgical Table properly.	1. **Correctly plug Hand Control into Table.**
Faulty Hand Control. **NOTE:** Use optional foot control/auxiliary control system until HC is replaced.	1. **Replace Hand Control.** 2. **If the problem persists, contact STERIS.**

6.18 Hydraulic Pump Does Not Operate But Tabletop Slide Function Does - nonALM

Condition

Surgical Table hydraulic pump does not operate but tabletop slide function does if the floor locks are engaged.

General Troubleshooting	Additional Information
Hydraulic pump power fuse (F4) faulty.	1. **Replace hydraulic pump power fuse (F4).**

6.19 Hydraulic Reservoir Shows Oil Loss But No Leaks Found - nonALM

Condition

Hydraulic oil reservoir shows a loss of fluid but no external leaks discovered.

General Troubleshooting	Additional Information
Height cylinder requires inspection.	1. **Contact STERIS.**

6.20 INTELLIPOWER OFF, Hand Control ON, Power Switch LED ON - nonALM

Condition

INTELLIPOWER Display bar graph is OFF, Hand Control is ON, and Main Power Switch Green LED is ON.

General Troubleshooting	Additional Information
Battery charger fuse (F1) is faulty.	1. **Replace battery charger fuse (F1).** 2. **If problem persists, contact STERIS.**

6.21 INTELLIPOWER ON, Battery Status Indicator ON, Power Plug OFF — nonALM

Condition

INTELLIPOWER Display bar graph is ON, Battery Status Indicator is ON, and AC Power Plug is OFF.

General Troubleshooting	Additional Information
Battery charger fuse (F1) is faulty.	1. **Replace battery charger fuse (F1).** 2. **If the problem persists, contact STERIS.**
Faulty batteries.	1. **Contact STERIS.**

6.22 Lock Again — ALM

Condition

Message appears on Hand Control — Lock Again.

The pressure switch status does not change after FLOOR LOCK is pressed or status does change and FLOOR LOCK was not pressed.

General Troubleshooting	Additional Information
Floor lock requires inspection.	1. **Contact STERIS.**

6.23 Low Battery — ALM

Condition

Message appears on Hand Control — Low Battery.

General Troubleshooting	Additional Information
Battery operating below nominal voltage range.	1. **Plug power cord into Facility power.** 2. **If green AC LED is not ON, ensure power switch is ON.** 3. **If the problem persists, contact STERIS.**

6.24 Loss of Table Function But Battery Fuse (F8) OK - nonALM

Condition

Loss of Surgical Table function but Battery Fuse (F8) is OK.

General Troubleshooting	Additional Information
Short circuit or failed hand control component.	1. **Isolate primary hand control and check operation with backup hand control.** 2. **Check both hand control cables.** 3. **Replace primary hand control.** 4. **If the problem persists, contact STERIS.**
Overcharging of batteries.	1. **Contact STERIS.**

6.25 Main Power Switch Green LED Off — nonALM

Condition

Surgical Table is not operating and there is no green light illuminated on the Main Power Switch.

General Troubleshooting	Additional Information
Main Power Switch is **OFF**.	1. **Turn Main Power Switch to ON.**
Power cord not plugged into facility power.	1. **Plug power cord into appropriate facility power supply.**
Defective power cord.	1. **Replace power cord.**
Power switch needs to be inspected.	1. **Contact STERIS.**

6.26 Master Control Board Failure — nonALM

Condition

Master Control Board FAILURE LED lights.

General Troubleshooting	Additional Information
Problem with Surgical Table receiving commands from master control board.	1. **Contact STERIS.**

6.27 Motor Defect — ALM

Condition

Message appears on Hand Control — Motor Defect.

General Troubleshooting	Additional Information
No SLIDE motor control or SLIDE inoperative.	1. **Contact STERIS.**

6.28 Motor Fail — ALM

Condition

Message appears on Hand Control — Motor Fail.

General Troubleshooting	Additional Information
SLIDE is inoperative.	1. **Contact STERIS.**

6.29 No Functions Available Using Hand Control — nonALM

Condition

No Surgical Table operating functions are available using the Hand Control.

General Troubleshooting	Additional Information
Hand Control not plugged into Surgical Table properly.	1. **Correctly plug Hand Control into Table.**
No power to Hand Control. Table deactivates after 30 minutes of non-use.	1. **Press any button on Hand Control (except STOP).**
Faulty Hand Control. **NOTE:** Use foot/auxiliary control. If Table functions correctly, HC is faulty.	1. **Replace Hand Control.** 2. **If the problem persists, contact STERIS.**
Battery fuse (F8) is faulty.	1. **Replace battery fuse.**
Insufficient battery charge (power).	1. **Connect power cord to appropriate Facility power and turn Main Power Switch to ON. Allow batteries to charge 12 hours to restore full charge.**

6.30 No Tabletop Slide and Floor Lock Operation - nonALM

Condition

Surgical Tables operates correctly (Facility and battery power) except for the SLIDE function and the floor locks.

General Troubleshooting	Additional Information
Slide control power fuse (F3) is faulty.	1. **Verify batteries accept charge.** 2. **Replace slide control power fuse (F3).**

6.31 Only Tabletop Slide Function Operates — nonALM

Condition

Only tabletop slide function operates.

General Troubleshooting	Additional Information
Faulty Surgical Table power system.	1. **Contact STERIS.**

6.32 Power Defect — ALM

Condition

Message appears on hand control — Power Defect.

General Troubleshooting	Additional Information
Transformer too hot. Surgical Table still operates on battery power.	1. **Wait for transformer to cool (30-60 minutes).** 2. **Try function again.** 3. **If problem persists, contact STERIS.**

6.33 Pump Defect — ALM

Condition

Message appears on Hand Control — Pump Defect.

General Troubleshooting	Additional Information
No hydraulic pump control.	1. **Contact STERIS.**

6.34 Pump Fail — ALM

Condition

Message appears on Hand Control — Pump Fail.

General Troubleshooting	Additional Information
Pump does not shut off.	1. **Contact STERIS.**

6.35 Reverse Orient Button Does Not Respond After Table Is in Beach Chair Mode - nonALM

Condition

Hand Control Reverse Orient button does not respond after table is in Beach Chair Mode

General Troubleshooting	Additional Information
User exited Beach Chair Mode incorrectly.	1. **Press Right MENU Arrow.** 2. **Detach Beach Chair screen should display.** 3. **Press left MOVE dot to properly exit Beach Chair Mode.**

6.36 Sensor DEF — ALM

Condition

SENSOR DEF displays after flex articulation. Flex display on hand control displays dashes. Table may or may not level correctly.

General Troubleshooting	Additional Information
Back or leg sensor requires inspection.	1. **Contact STERIS.**

6.37 Sensor Defect — ALM

Condition

Message appears on Hand Control — Sensor Defect.

Level function is disabled.

General Troubleshooting	Additional Information
An internal sensor requires inspection.	1. **Contact STERIS.**

6.38 Sensor Fail — ALM

Condition

Message appears on Hand Control — Sensor Fail.

Level function is disabled.

General Troubleshooting	Additional Information
An internal sensor requires inspection.	1. **Contact STERIS.**

6.39 Slide Defect — ALM

Condition

Message appears on Hand Control — Slide Defect.

General Troubleshooting	Additional Information
No SLIDE control. SLIDE inoperative.	1. **Contact STERIS.**

6.40 Slide Fail — ALM

Condition

Message appears on Hand Control — Slide Fail.

General Troubleshooting	Additional Information
SLIDE is continuously operating or SLIDE is inoperative.	1. **Contact STERIS.**

6.41 Table Articulation Drifts — nonALM

Condition

Surgical Table articulation drifts or is spongy.

General Troubleshooting	Additional Information
Hydraulic system issue.	1. **Contact STERIS.**

6.42 Table Does Not FLEX, REFLEX, and LEVEL Using Hand Control — nonALM

Condition

Surgical Table does not FLEX, REFLEX, and LEVEL using the hand control but all other buttons function normally.

General Troubleshooting	Additional Information
Table is in Reverse Orientation. These functions are not permitted in Reverse Orientation.	1. **LEVEL is allowed if table is in Beach Chair Mode.** 2. **Press STOP.** 3. **Put table in Normal Mode.**
The sensors needed for the leveling function are faulty.	1. **Manually level tabletop using the other hand control function buttons.** 2. **If the problem persists, contact STERIS.**
Faulty hand control.	1. **Replace hand control.** 2. **If the problem persists, contact STERIS.**

6.43 Table Does Not Function on Facility Power But Does on Battery Power - nonALM

Condition

Surgical Table does not function on with power cord plugged into appropriate Facility power. However, Table does function on battery power.

General Troubleshooting	Additional Information
Control power fuse (F2) defective.	1. **Verify INTELLIPOWER Display Battery Status Indicator functions when on battery power.** 2. **Verify Power Plug Indicator functions when power cord is plugged into appropriate Facility power.** 3. **Replace control power fuse (F2).**

6.44 Table Does Not Raise/Lower Using Hand Control — nonALM

Condition

Surgical Table does not raise or lower using the hand control.

General Troubleshooting	Additional Information
Hand control is not on.	1. **Press any button on hand control (except STOP).**
Faulty hand control.	1. **Replace hand control.** 2. **If the problem persists, contact STERIS.**

6.45 Table Does Not Tilt Using Hand Control — nonALM

Condition

Surgical Table does not tilt right or left using the hand control.

General Troubleshooting	Additional Information
Hand control is not on.	1. **Press any button on hand control (except STOP).**
Faulty hand control.	1. **Replace hand control.** 2. **If the problem persists, contact STERIS.**

6.46 Table Does Not Trendelenburg/Reverse Trendelenburg Using Hand Control — nonALM

Condition

Surgical Table does not Trendelenburg or Reverse Trendelenburg using the hand control.

General Troubleshooting	Additional Information
Hand control is not on.	1. **Press any button on hand control (except STOP).**
Faulty hand control.	1. **Replace hand control.** 2. **If the problem persists, contact STERIS.**

6.47 Table Is Locked But Hand Control Indicates Unlocked - nonALM

Condition

Table is locked but primary hand control indicates unlocked.

General Troubleshooting	Additional Information
Internal pressure switches require inspection.	1. **Contact STERIS.**

6.48 Table Remains on Battery Power — nonALM

Condition

Surgical Table remains on battery power even when main power cord is plugged into Facility power.

General Troubleshooting	Additional Information
Incorrect power cord connection.	1. **Verify plug is properly seated.** 2. **Verify outlet is providing power.**
Faulty power cord.	1. **Replace power cord.**

6.49 Table Rocks While on Casters - nonALM

Condition

Surgical Table rocks while on casters. One caster is not touching floor.

General Troubleshooting	Additional Information
Uneven floor.	1. **Check floor level.**
Caster mounting pads require inspection.	1. **Contact STERIS.**

6.50 Unanticipated Table Movement — nonALM

Condition

Table moves without operator input.

General Troubleshooting	Additional Information
Damaged or stuck keypad on Hand Control.	1. **Isolate primary hand control and check operation with backup hand control.** 2. **Replace primary hand control.** 3. **If the problem persists, contact STERIS.**
Fluid ingress into one/both hand controls.	1. **Replace faulty hand control.**
Bad backup hand control.	1. **Unplug backup hand control and check operation of primary hand control.** 2. **Replace backup hand control.**

6.51 Unusual Noise While Tabletop Is Translating — nonALM

Condition

Unusual noise is heard while tabletop is translating and slide control board failing frequently.

General Troubleshooting	Additional Information
An issue with linear side rail bearings	1. **Contact STERIS.**

6.52 Valve Defect — ALM

Condition

Message appears on Hand Control — Valve Defect.

General Troubleshooting	Additional Information
No valve control.	1. **Contact STERIS.**

6.53 Valve Fail — ALM

Condition

Message appears on Hand Control — Valve Fail.

General Troubleshooting	Additional Information
Valve does not shut off.	1. Contact STERIS.

6.54 Voltage Peak — ALM

Condition

Message appears on hand control — Voltage Peak.

General Troubleshooting	Additional Information
Battery voltage reaches 31 V (batteries are overcharging which can damage Surgical Table).	1. Immediately disconnect power cord. 2. Contact STERIS.

6.55 Wrench 2 — ALM

Condition

Wrench 2 Alarm ICON appears on the hand control.

General Troubleshooting	Additional Information
Commands received from both primary and auxiliary hand controls.	1. Only one hand control (primary or auxiliary) is required to perform user guided task.

6.56 Wrench 7 — ALM

Condition

Wrench 7 Alarm ICON appears on the hand control.

General Troubleshooting	Additional Information
Surgical Table SLIDE operating blocked.	1. Press STOP. 2. Something is obstructing the tabletop producing an overvoltage situation. Remove obstruction. 3. Repeat desired operation. 4. If problem persists, contact STERIS.

6.57 Wrench 9 — ALM

Condition

Wrench 9 Alarm ICON appears on the hand control.

General Troubleshooting	Additional Information
Surgical Table batteries depleted.	1. Plug table into facility power. 2. Recharge batteries when able. 3. If the problem persists, contact STERIS.

6.58 Wrench 10 — ALM

Condition

Wrench 10 Alarm ICON appears on the hand control.

General Troubleshooting	Additional Information
Floor lock require inspection.	1. Contact STERIS.

6.59 Wrench 11 — ALM

Condition

Wrench 11 Alarm ICON appears on the hand control.

General Troubleshooting	Additional Information
Hand control button depressed too long.	1. If button was pressed for more than one minute, release button and repress for less than one minute. 2. If no button was depressed, press STOP to stop any table movement. 3. If problem persists after reset, replace faulty hand control. 4. If the problem persists, contact STERIS.

6.60 Wrench 12 — ALM

Condition

Wrench 12 Alarm ICON appears on the hand control.

General Troubleshooting	Additional Information
TILT sensor requires inspection. Combination movements (MEM, Rotate*, Transport*, Level, Flex, and Reflex) are not allowed.	NOTE: * = SRT Models Only 1. **Contact STERIS.**

6.61 Wrench 13 — ALM

Condition

Wrench 13 Alarm ICON appears on the hand control.

General Troubleshooting	Additional Information
TRENDELENBURG sensor requires inspection. Combination movements (MEM, Rotate*, Transport*, Level, Flex, and Reflex) are not allowed.	NOTE: * = SRT Models Only 1. **Contact STERIS.**

6.62 Wrench 14 — ALM

Condition

Wrench 14 Alarm ICON appears on the hand control.

General Troubleshooting	Additional Information
BACK sensor requires inspection. Combination movements (MEM, Rotate*, Transport*, Level, Flex, and Reflex) are not allowed.	NOTE: * = SRT Models Only 1. **Contact STERIS.**

6.63 Wrench 15 — ALM

Condition

Wrench 15 Alarm ICON appears on the hand control.

General Troubleshooting	Additional Information
LEG sensor requires inspection. Combination movements (MEM, Rotate*, Transport*, Level, Flex, and Reflex) are not allowed.	NOTE: * = SRT Models Only 1. **Contact STERIS.**

6.64 Wrench 17 — ALM

Condition

Wrench 17 Alarm ICON appears on the hand control.

General Troubleshooting	Additional Information
HEIGHT sensor requires inspection. Combination movements (MEM, Rotate*, Transport*, Level, Flex, and Reflex) are not allowed.	NOTE: * = SRT Models Only 1. **Contact STERIS.**

6.65 Wrench 18 — ALM

Condition

Wrench 18 Alarm ICON appears on the hand control.

General Troubleshooting	Additional Information
SLIDE sensor requires inspection. Combination movements (MEM, Rotate*, Transport*, Level, Flex, and Reflex) are not allowed.	NOTE: * = SRT Models Only 1. **Contact STERIS.**

6.66 Wrench 20 — ALM

Condition

Wrench 20 Alarm ICON appears on the hand control.

General Troubleshooting	Additional Information
Sensors require inspection. Combination movements (MEM, Rotate*, Transport*, Level, Flex, and Reflex) are not allowed.	NOTE: * = SRT Models Only 1. **Contact STERIS.**

6.67 Wrench 21 — ALM

Condition

Wrench 21 Alarm ICON appears on the hand control.

General Troubleshooting	Additional Information
Battery fuse and battery require inspection.	1. **Contact STERIS.**

6.68 Wrench 22 — ALM

Condition

Wrench 22 Alarm ICON appears on the hand control.

General Troubleshooting	Additional Information
Battery requires inspection.	1. **Contact STERIS.**

6.69 Wrench 23 — ALM

Condition

Wrench 23 Alarm ICON appears on the hand control.

General Troubleshooting	Additional Information
Batteries and charger require inspection.	1. **Contact STERIS.**

6.70 Wrench 24 — ALM

Condition

Wrench 24 Alarm ICON appears on the hand control.

General Troubleshooting	Additional Information
Power supply requires inspection.	1. **Contact STERIS.**

6.71 Wrench 25 — ALM

Condition

Wrench 25 Alarm ICON appears on the hand control.

General Troubleshooting	Additional Information
Hydraulics failure.	1. **Contact STERIS.**

6.72 Wrench 26 — ALM

Condition

Wrench 26 Alarm ICON appears on the hand control.

General Troubleshooting	Additional Information
Hydraulics failure. Inspection required.	1. **Contact STERIS.**

6.73 Wrench 27 — ALM

Condition

Wrench 27 Alarm ICON appears on the hand control.

General Troubleshooting	Additional Information
No slide motor feedback.	1. Contact STERIS.

6.74 Wrench 28 — ALM

Condition

Wrench 28 Alarm ICON appears on the hand control.

General Troubleshooting	Additional Information
Continuous slide motor feedback.	1. Contact STERIS.

6.75 Wrench 29 — ALM

Condition

Wrench 23 Alarm ICON appears on the hand control.

General Troubleshooting	Additional Information
Slide command not received.	1. Contact STERIS.

6.76 Wrench 30 — ALM

Condition

Wrench 30 Alarm ICON appears on the hand control.

General Troubleshooting	Additional Information
Continuous slide command received.	1. Restart Surgical Table by pressing STOP button followed by any command button. 2. Test table with a known working hand control from another table. Replace faulty hand control if this corrects alarm. 3. If the problem persists, contact STERIS.

6.77 Wrench 31 — ALM

Condition

Wrench 31 Alarm ICON appears on the hand control.

General Troubleshooting	Additional Information
Software update required.	1. **Contact STERIS.**

6.78 Wrench 32 — ALM

Condition

Wrench 32 Alarm ICON appears on the hand control.

Table turns off 10 seconds after message is displayed.

General Troubleshooting	Additional Information
Power supply inspection is required.	1. **Contact STERIS.**

6.79 Wrench 33 — ALM

Condition

Wrench 33 Alarm ICON appears on the hand control.

Surgical Table turns OFF 10 seconds after message is displayed.

General Troubleshooting	Additional Information
Battery and wire harness inspection required.	1. **Contact STERIS.**

6.80 Wrench 34 — ALM

Condition

Wrench 34 Alarm ICON appears on the hand control.

Table turns OFF 10 seconds after message is displayed.

General Troubleshooting	Additional Information
Continuous slide command received.	1. **Restart Surgical Table by pressing STOP button followed by any command button.** 2. **Test table with a known working hand control from another table. Replace faulty hand control if this corrects alarm.** 3. **If the problem persists, contact STERIS.**
Master control board inspection required.	1. **Contact STERIS.**

6.81 Wrench 38 — ALM

Condition

Wrench 38 Alarm ICON appears on the hand control.

General Troubleshooting	Additional Information
Drive wheel assembly (SRT Models only) requires inspection..	1. **Contact STERIS.**

6.82 Wrench 39 — ALM

Condition

Wrench 39 Alarm ICON appears on the hand control.

General Troubleshooting	Additional Information
Drive wheel assembly (SRT Models only) requires inspection.	1. **Contact STERIS.**

6.83 Wrench 42 — ALM

Condition

Wrench 42 Alarm ICON appears on the hand control.

General Troubleshooting	Additional Information
Master control board inspection required.	1. **Contact STERIS.**

6.84 Wrench 47 — ALM

Condition

Wrench 47 Alarm ICON appears on the hand control.

General Troubleshooting	Additional Information
Primary hand control unplugged or not completely seated.	1. **Ensure primary hand control is plugged into Surgical Table.** 2. **Restart Surgical Table by pressing the STOP button followed by any command button.** 3. **Test table with known working hand control from another table. Replace faulty hand control if this corrects alarm.** 4. **If the problem persists, contact STERIS.**

6.85 Wrong Use — ALM

Condition

Message appears on hand control — Wrong Use.

General Troubleshooting	Additional Information
Control senses hand control pushbutton is pressed and held for longer than one minute.	1. **Release button and retry desired function.** 2. **Defective button on hand control. Replace hand control.**

Routine Maintenance

7.1 Read Before Performing Routine Maintenance

WARNING

PERSONAL INJURY AND/OR EQUIPMENT DAMAGE HAZARD



- Repairs and adjustments to this equipment must be made only by STERIS or STERIS-trained service personnel. Maintenance performed by unqualified personnel or installation of unauthorized parts could cause personal injury, result in improper equipment performance, invalidate the warranty, or result in costly damage. Contact STERIS regarding service options.
- Regularly scheduled preventive maintenance is required for safe and reliable operation of this equipment. Contact STERIS to schedule preventive maintenance.
- Do not service or maintain equipment while in use.

The routine maintenance procedures described in this section of the manual should be performed whenever necessary and as outlined in this section of the manual. Any maintenance procedures not included in this section should be performed only by STERIS-trained service personnel fully acquainted with this Surgical Table.

In addition to the routine maintenance described in this section, regularly scheduled preventive maintenance is essential for safe and reliable operation of the equipment. Annual maintenance programs are available to provide scheduled maintenance, adjustments and replacement of worn parts performed by a qualified technician, to help ensure peak equipment performance and help avoid unscheduled downtime. Contact STERIS for details.

The following preventive maintenance advisories must be observed:

1. **Under no circumstances should this equipment be serviced without the Maintenance Manual. This (use of Maintenance Manual) also meets requirements for essential performance and compliance with electromagnetic compatibility.**
2. **The Maintenance Manual can be purchased by contacting STERIS Customer Service.**
3. **A detailed Preventive Maintenance schedule and replacement parts list can be found in the Maintenance Manual.**
4. **Preventive Maintenance is essential in keeping this equipment in optimal working condition. STERIS recommends establishing an annual maintenance agreement with STERIS service.**
5. **Customer should maintain a record of all maintenance procedures performed on the Table.**
6. **If a problem associated with an Error Code occurs, refer to the Troubleshooting Section.**
7. **Preventive Maintenance and regular service must be performed according to the Maintenance Manual to comply with the requirements for essential performance and compliance with electromagnetic compatibility.**
8. **The Maintenance Manual describes the steps necessary for checking and replenishing the hydraulic oil.**

   NOTE: Never permit unqualified persons to service the table and Preventive Maintenance is not covered under warranty.

7.2 Cleaning Table

This section includes the following:

Introduction

General

After Each Usage

End-of-Day

Weekly

Introduction

WARNING

INFECTION HAZARD

To protect against aerosols being reflected from contaminated surfaces, wear rubber or plastic gloves, masks, and eye protection and follow OSHA blood-borne pathogens standards when cleaning.

When cleaning/disinfecting Surgical Table, do not use alcohol which does not have sufficient cleaning/ disinfection properties.

WARNING

PERSONAL INJURY HAZARD

When cleaning/disinfecting this Surgical Table, do not use phenolics, which may cause patient skin burns if inadequately rinsed off, or alcohol, which does not have sufficient cleaning/ disinfection properties.

CAUTION

POSSIBLE EQUIPMENT DAMAGE

Cleaning procedures requiring articulation of the Surgical Table should be performed only by persons familiar with table operation.

Do not spray cleaning fluid into electric receptacles and avoid spraying directly on emergency backup buttons or into clearance space. Spray or drippage may settle onto electric circuits inside table causing corrosion and loss of function.

Hang the hand control from side rail of the Surgical Table when not in use to avoid possible damage to the control.

After performing cleaning procedures, ensure pads, tabletop, and X-Ray tops are completely dry before reinstalling. Failure to do so can result in damage to tabletop and pads. Moisture trapped between pads and X-Ray tops may contribute to equipment damage, such as X-Ray top warpage.

When cleaning/disinfecting Surgical Table, thoroughly read the cleaning fluid directions for use and follow all directions and cautions as shown.

NOTE: The user must follow the requirements of the national committee responsible for hygiene and disinfection when cleaning table. Disinfectants can be used in spray or wipe applications. Enzymatic cleaners should be applied with a disposable cloth and not sprayed (and thoroughly rinsed with a clean, damp, lint-free cloth to remove residue).

When cleaning table and pads, note the following:

1. **Use of any disinfectant solution OTHER than those listed below may cause discoloration or deterioration of pad surface:**
   - **Coverage® Plus Germicidal Surface Wipes Disinfecting/ Deodorizing/Cleaning Wipes**
   - **Quaternary Ammonium Compound (Quats) with Ethanol solvent**
   - **Quaternary Ammonium Compound (Quats) with Isopropyl Alcohol (IPA) solvent**
   - **Quaternary Ammonium Compound (Quats) with IPA + 2- Butoxyethanol solvent**
   - **Quaternary Ammonium Compound (Quats) + Biguanide**
   - **H2O2 (Hydrogen Peroxide)**
   - **Neutral Cleaners**
2. **The use of H2O2 + PAA (Hydrogen Peroxide + Peracetic Acid) is strongly discouraged for use on all STERIS products.**
3. **Always follow manufacturer instructions for concentrations and use of cleaning products.**
4. **Avoid discoloration of hand control keypad and display. Do not clean hand control with povidone-iodine solutions or allow such solutions to contact keypad and display surfaces.**
5. **Ensure no excess fluids remain on pads or table top surfaces during and after cleaning.**
6. **DO NOT SPRAY any cleaning product directly onto hand control or any system components. For other system components, dampen a clean, soft cloth with the cleaning solution and wring out the excess moisture.**
7. **If recommended cleaning products are not available in your area, use a neutral disinfectant or a disinfectant with a sodium hypochlorite solution (0.1% or 1000 parts per million available chlorine).**

General

Use the following materials to perform cleaning procedures described in this section:

- **Several clean, dry, lint-free cloths.**
- **Container of clean water.**
- **Prepare approved cleaning or disinfecting solutions as directed on product label.**

To ensure prolonged use of STERIS mattresses and pads, abide by following cleaning instructions:

1. **Inspect mattress prior to and/or after use to check for mattress integrity.**
2. **Follow cleaning frequency per facility protocol; however, clean all stains promptly.**
3. **Use hospital-grade low-level disinfectant cleaning agent appropriate for soft materials.**
4. **For special considerations such as large volume blood spills, contamination or exposure to high risk tissue and fluids or C. difficile, mattresses and pads may be cleaned with an intermediate to high level distinction dilution rate of 10% or 1:10 dilution rate of household beach (5.25% or 6% sodium hypochlorite) also expressed as 5000 parts per million of available chlorine, as recommended by the CDC and AORN guidelines.**

   NOTE: This dilution rate or higher is not the recommendation for routine use and requires a damp cloth water rinse post cleaning.
5. **Dilute all cleaners, disinfectants and germicides in accordance with manufacturers' instructions.**
6. **Use a soft sponge, cloth or wipe to clean, avoiding hard bristle or abrasive brushes.**
7. **Allow adequate drying time before returning mattress to table or accessory surface and placing into service.**
8. **Avoid applying strong adhesive tape directly to mattress surface, as pulling and tearing may affect integrity of mattress material.**
9. **Some cleaning agents leave a residue which can build up over time. Depending on cleaning agent, it may be necessary to rinse and wipe clean with a slightly damp cloth.**
10. **Some procedures performed on table mattresses or pads may involve excessive fluid exposure. Be sure to drape accordingly.**

STERIS also recommends the following precautions for mattresses and pads:

1. **Do not pull, tear, rip, or cut Vent flap tag as it is an integral mattress part.**
2. **Do not machine wash or machine dry.**
3. **Do not use harsh cleaners or solvents including moderate to high concentrations of alcohol.**
4. **Do not use staining or color stripping chemicals or iodophor type disinfectants, such as Betadine or improperly diluted bleach, which can affect fabric finish, color and possibly fabric strength.**
5. **Do not use undiluted or improperly diluted bleach or concentrated cleaning agents.**
6. **Do not allow any cleaning agent to remain in contact with fabric for a prolonged time or beyond cleaning agent manufacturer's recommendations.**
7. **Do not fail to adequately rinse cleaning agent or disinfectant from fabric.**

After Each Usage

IMPORTANT: *Read all Safety Precautions presented in Introduction section.*

After each use of the Surgical Table, clean/disinfect as follows:

NOTE: Ensure all protective covers are installed over any open receptacles.

1. **Remove gross soil with a disposable cloth and place used cloth in an appropriate biohazardous waste disposal container.**
2. **Clean tabletop and pads as follows:**
   a. **Articulate tabletop to level and place at comfortable working height.**
   b. **Gently "peel" pad away from tabletop fastening strips and place on another table or flat surface.**
   c. **Hold can 6-8" (152-203 mm) from surface and spray cleaning fluid liberally on top and sides of pads or wipe with a clean cloth dampened with cleaning solution. (It is recommended to clean only one pad at a time.) Carefully avoid any pad seams.**

d. Wipe dampened surfaces with a clean, lint-free cloth dampened with water to remove cleaning fluid (dampening cloth minimizes streaking).

e. Wipe dampened surfaces with a clean, lint-free cloth dampened with water to remove cleaning fluid (dampening cloth minimizes streaking).

f. Wipe cleaned surfaces again with clean, dry, lint-free cloth to remove all moisture.

g. Repeat *Step c*, *Step d*, and *Step e* for other pads. Repeat *Step c*, *Step d*, *Step e*, and *Step f* for tabletop surfaces exposed when pads are removed. Thoroughly dry bottom of pads and tabletop surfaces.

h. Place pads back onto tabletop by aligning with sides of table and pressing into place on fastening strips.

3. Raise table to maximum height to access lower surfaces.
4. Clean yoke, shrouds and entire base surface as follows:

   a. Hold can 6-8" (152-203 mm) from surface and spray cleaning fluid liberally on yoke and shrouds. Avoid spraying in direction of connectors.

   b. Wipe sprayed surfaces with a clean, lint-free cloth dampened with water to remove cleaning fluid (dampening cloth minimizes streaking).

   c. Wipe cleaned surfaces again with a clean, damp, lint-free cloth to remove residue.

   d. Repeat *Step a*, *Step b*, and *Step c* for base surface.

5. Turn hand control OFF and clean as follows:

   NOTE: Do NOT immerse hand control in liquid.

   a. Hold can 6-8" (152-203 mm) from surface and spray cleaning fluid liberally on hand control.

   b. Wipe sprayed surfaces with a clean, lint-free cloth dampened with water to remove cleaning fluid (dampening cloth minimizes streaking).

End-of-Day

At the end of each day, perform the cleaning procedures as outlined in *After Each Usage*.

Weekly

After each weekly use of this Surgical Table, clean/ disinfect table as follows:

1. Perform *Steps 1* through *4* of *After Each Usage*.
2. Check table casters and floor locks for any accumulated debris and clean as follows:

   a. Ensure floor locks are properly engaged (raising casters off floor).

   b. Hold cleaner spray can 6-8" (152-203 mm) from caster and spray cleaning fluid liberally on the caster.

   c. Wipe caster with a cloth, dampened with water, to remove cleaning fluid and debris.

   d. Perform *Step b* and *Step c* for remaining three casters.

3. Articulate table through all movements and clean all additional surfaces exposed during these articulations as follows:

   a. Hold spray cleaner can 6-8" (152-203 mm) from surface to be cleaned and spray cleaning fluid liberally on surface.

   b. Wipe sprayed surfaces with a clean, lint-free cloth, dampened with water to remove cleaning fluid.

   c. Wipe cleaned surfaces again with a clean, damp, lint-free cloth to remove any remaining residue.

4. Turn hand control OFF when finished with cleaning procedure.
5. Perform Step 5 of *After Each Usage*.

7.3 Bi-Weekly Maintenance

Operate this Surgical Table to verify all functions perform correctly. Operation must be smooth and quiet. If table operation is not smooth, have a qualified technician repair the table. Never permit inexperienced, unqualified persons to attempt to make any repairs to the table.

7.4 Monthly Maintenance

Check each Surgical Table caster and floor lock for any accumulated debris and clean as follows:

NOTE: Ensure Hand Control is in proper working order and good condition.

1. **Ensure floor locks are properly engaged.**
2. **Hold spray cleaner can 6-8" (152-203 mm) from caster and spray cleaning fluid liberally on the caster.**
3. **Wipe caster with a cloth, dampened with water, to remove cleaning fluid and debris. Ensure items such as suture, oils and floor wax are removed.**
4. **Perform steps 2 and 3 and for remaining three casters.**

7.5 Battery Charging

This section includes the following:

What You Should Know Before Charging the Batteries

Battery Charging Procedure

What You Should Know Before Charging the Batteries

This Surgical Table is equipped with INTELLIPOWER® dual power system. The Table is powered either by Facility power or by internal batteries. If Table is to be operated on battery power, note the following:

IMPORTANT: *Batteries are recharged automatically as long as the Main Power Switch is set to ON and the ac supply power is connected to the Table. The PLUG icon appears on Power Panel LED Display (see Figure 7-1) and on the LCD display.*

Bar graph description:

- **When Table is plugged into facility ac and Main Power Switch is ON, the diode bar shows battery charge state. This battery charge state is also indicated by icon on Primary Hand Control.**
- **When Table is on battery power and Primary Hand Control is active (on), the diode bar shows battery charge state. This battery charge state is also indicated by icon on Primary Hand Control.**

NOTE: Press STOP button on Primary Hand Control when Table is idle to ensure batteries are not depleted. Significant power is used in Standby Mode.

Batteries require recharging on a periodic basis depending on frequency of Table usage. Low or discharged battery conditions are indicated by GOLD or RED icons on the Hand Control LCD Display and some or all green diode bars on Power Panel LED Display are OFF.

NOTE: Maximum life expectancy for a battery that has a history of proper care and charging is four years. More frequent battery replacement is required if charging recommendations are not followed. Fully charged batteries enable approximately 20 procedures (approximately five days) without recharging. Note the charge/discharge icon on the LED Display (see *Figure 7-1*) of Power Panel. Turning the Table OFF between uses and at end of each day (if no access to Facility power) enables more than five days battery capacity.

Lead acid batteries last longer if they are not permitted to fully discharge. Therefore, to obtain the longest life and capacity from the Table batteries, always connect ac power cord to Table base and plug into an appropriate ac receptacle as often as possible, and as long as possible, with the Main Power Switch set to **ON**. If this is not always possible, recharge batteries at the following times:

NOTE: When two green diode bars on Power Panel LED Display are OFF, batteries are half charged. This level of power enables normal Table operation without damaging the batteries. However, when the last green diode bar is OFF, batteries must be recharged without further delay or battery damage occurs. If all diodes are OFF, batteries are completely drained and the Table can only operate on main Facility power.

- **Every five days when the Table is in normal service; more often if usage demands.**
- **Whenever GOLD BATTERY icon appears on LCD Status Control Indicator.**
- **If the Table remains in extended storage for longer than six months; batteries must be charged every six months.**

NOTE: If the sealed lead-acid gel electrolyte-type batteries do not charge, check for the following:

1. **Battery fuse is blown - replace the fuse (refer to Installing Battery Fuse (F8) section of *Section 4.2, Installation*).**
2. **Power cord is defective - replace if necessary.**
3. **Main Power Switch is OFF (not illuminated).**
4. **Charger Circuit is not operating.**

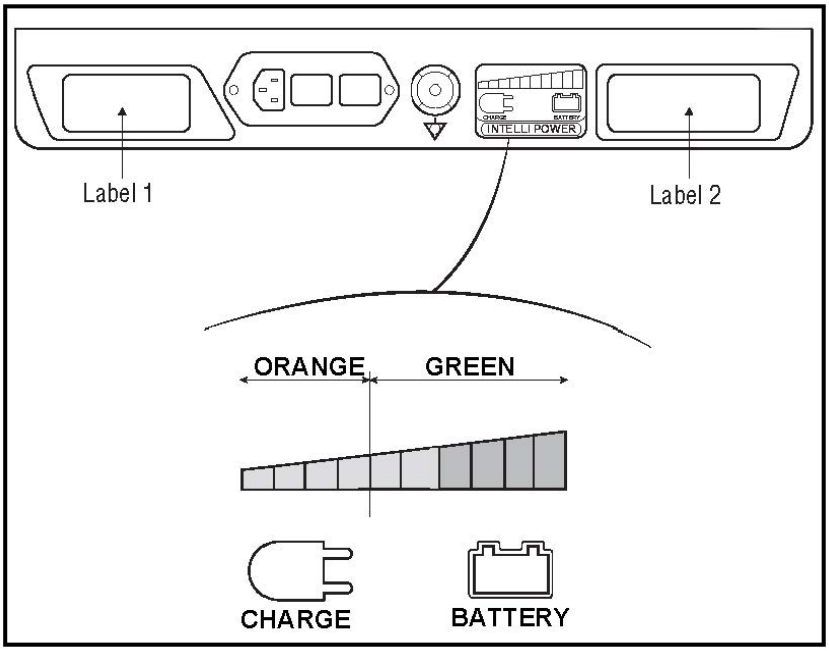

Figure 7-1. INTELLIPOWER Panel LED Display

Battery Charging Procedure

WARNING

PERSONAL INJURY AND/OR EQUIPMENT DAMAGE HAZARD

Repairs and adjustments to this equipment must be made only by STERIS or STERIS-trained service personnel. Maintenance performed by unqualified personnel or installation of unauthorized parts could cause personal injury, result in improper equipment performance, invalidate the warranty, or result in costly damage. Contact STERIS regarding service options.

WARNING

TRIPPING HAZARD

Route the power cord to the receptacle to minimize being tripped over by personnel in the area.

Recharge batteries as follows:

1. **Connect ac power cord to table base and plug into an appropriate Facility ac receptacle.**
2. **Turn Main Power Switch to ON.**
3. **Allow approximately 12 hours for full battery charge.**
4. **Verify FILLED BATTERY icon on hand control. Disconnect ac power.**

7.6 ALS Check

WARNING

PERSONAL INJURY AND/OR EQUIPMENT DAMAGE HAZARD

The Auto Limit Sensors (ALS) System indicated potential collisions may not have complete data of the surgical environment. Surgical staff should therefore use professional judgement and common sense in evaluating whether to implement a suggestion.

This Surgical Table is equipped with the Auto Limit Sensor system. This system provides instant user feedback on any conflicting tabletop articulations. An Auto Limit Sensors (ALS) Warning on the Primary Hand Control LCD Display indicates the tabletop has been ordered into a configuration or has moved into a position that may cause tabletop damage or patient injury. To prevent a tabletop sectional conflict, or collision of tabletop with the Table or floor, ALS System immediately stops the movement in process, the pictorial changes to red, and the Primary Hand Control vibrates.

NOTE: The ALS System suggested alternative movement is not the only movement available. Also, ALS System assumes head section is level with back section. If not, Table articulations toward head end could cause Table damage.

Test the Auto Limit Sensor system as follows:

1. **Review and follow instructions presented in Safety Precautions and Pinch Points section, and prepare the Surgical Table for operation.**
2. **Raise tabletop to highest position possible.**
3. **Select SLIDE function and move tabletop to head end limit.**
4. **Select LEG function until ALS Warning turns pictorial red and tabletop motion stops. If system doesn't engage, stop tabletop movement before collision and contact STERIS.**

   NOTE: The ALS System does not compensate for Table accessories and so if accessories are attached to the Table, collision with Table or floor can occur without warning.

7.7 LEVEL Check

Check the Surgical Table tabletop LEVEL function as follows:

1. **Review and follow instructions presented in *Section 4.3, Primary Hand Control*, and prepare Surgical Table for operation.**

2. Press LEVEL touch pad.

   NOTE: When operating in REVERSE ORIENTATION, refer to *Section 4.4, Reverse Patient Orientation*.

3. When depressed, tabletop is gradually returned to level or horizontal position by aligning tabletop sections in following order:
   a. KIDNEY Elevator and lateral tilt.
   b. Trendelenburg and back.
   c. Leg.

      NOTE: The LCD Display pictorials and values change accordingly.

4. Use a level and ensure tabletop is level. If not, contact STERIS.

7.8 Backup Hand Control Check

Check the Surgical Table Backup Hand Control as follows:

1. Review and follow instructions presented in*Section 4.6, Backup Control System*, and prepare the Surgical Table for backup hand control operation.
2. With tabletop at extreme low point, press HEIGHT UP touch pad and pump pedal.
3. Ensure tabletop rises correctly. If not, call STERIS.

7.9 Replacement Parts

The parts listed in this section are those that would be necessary to do minor maintenance on this Surgical Table.

To order replacement parts, proceed as follows:

1. Include part number and description listed in *Table 7-1*.
2. Include model and serial numbers of your equipment on your order.
3. Send your order directly to STERIS.

   NOTE: For Replacement Parts, note the following:
   a. Use only STERIS authorized parts on the equipment. Use of unauthorized parts will void the warranty.
   b. This Table uses lead-acid batteries. Lead-acid batteries normally are subject to self-discharge and battery-life deterioration in long-term storage. Therefore, STERIS does not recommend that batteries be procured and then stored as spare parts. If batteries are procured and stored, they should be kept covered and in a cool, dry area. Stored batteries should be recharged every six months to minimize deterioration. Use a charging current commensurate with the battery amp-hour size. Charge to a floating charge voltage equivalent to 13.6-13.8 volts.

Table 7-1. Replacement Parts

DESCRIPTION	PART NUMBER	RECOMMENDED SPARES
Primary Hand Control Assembly	542804999M	1
Cord, Hand Control	413724260	1
Power Cord	093909354	1
Fuse (Main), 4.0 Amp	150832335	1
Fuse (Set)	342213555	1

Table 7-1. Replacement Parts (continued)

DESCRIPTION	PART NUMBER	RECOMMENDED SPARES
Pad, Drive Head Section	413724463	1
Pad, Back/Seat Section	413724464	1
Pad, Leg Section	413724465	1

Appendix A - EMC Compliance

8.1 Introduction

This Surgical Table is designed for most surgical procedures with maximum radiological access without patient reversing. The Surgical Table is also designed to safely move patients within the surgical suite (from pre-operative area to operating room and from operating room to post-operative recovery). The Surgical Table and related components are intended for use in the electromagnetic environment specified in through . The Customer or the user should ensure this Table is used in such an environment.

8.2 EMC COMPLIANCE TECHNICAL DATA

NOTE: Review all EMC safety precautions listed below before operating the STERIS 5085 SRT Surgical Table within the surgical suite.

CAUTION

POSSIBLE EQUIPMENT DAMAGE

- Appropriate components of this surgical table have been tested and found in compliance with IEC 60601-1-2, Medical Electrical Equipment - Part 1; General Requirements for Safety; Electromagnetic Compatibility (EMC). There is, however, a potential for electromagnetic or other interference between this equipment and other devices. Should user experience interference, relocate this device or minimize the use of the affected equipment while this device is in operation.
- Surgical table operation may be temporarily affected if portable or mobile RF communications equipment is used in close proximity.
- Medical Electrical Equipment needs special precautions regarding EMC. Put table into service according to the EMC information provided in this manual.
- Possible EMC increased EMISSIONS or decreased IMMUNITY. Do not use accessories or replacement parts not listed in the Operator or Maintenance Manuals.
- Surgical table operation may be affected if used adjacent to or stacked with other equipment. If adjacent or stacked use is needed, ensure table operates properly in this configuration.

Table 8-1. Requirements Applicable to All ME Equipment and ME Systems (per IEC 60601-1-2, Clause 5.2.2.1)

The STERIS 5085 SRT Surgical Table and related components are intended for use in the electromagnetic environment specified below. The Customer or the user should ensure this STERIS 5085 SRT Surgical Table is used in such an environment.		
Emissions test	**Compliance**	**Electromagnetic environment – guidance**

Table 8-1. Requirements Applicable to All ME Equipment and ME Systems (per IEC 60601-1-2, Clause 5.2.2.1) (continued)

RF emissionsCISPR 11	Group 1	The STERIS 5085 SRT Surgical Table uses RF energy only for its internal function. Therefore, its RF emissions are very low and are not likely to cause any interference in nearby electronic equipment.
RF emissionsCISPR 11	Class A	The STERIS 5085 SRT Surgical Table is suitable for use in all establishments, other than domestic and those directly connected to the public low-voltage power supply network that supplies buildings used for domestic purposes.
Harmonic emissionsIEC 61000-3-2	Class A	
Voltage fluctuations/flicker emissions IEC 61000-3-3	Complies	

NOTE: The emissions characteristics of this equipment make it suitable for use in industrial areas and hospitals (CISPR 11 Class A). If it is used in a residential environment (for which CISPR 11 Class B is required) this equipment might not offer adequate protection to radio frequency communication services. The user might need to take mitigation measures, such as relocating or re-orienting the equipment.

Table 8-2. Guidance and Manufacturer's Declaration – Electromagnetic Immunity For All Equipmentand Systems (per IEC 60601-1-2, Clause 5.2.2.1)

The STERIS 5085 SRT Surgical Table and related components are intended for use in the electromagnetic environment specified below. The Customer or the user should ensure this STERIS 5085 SRT Surgical Table is used in such an environment.			
Immunity test	**IEC 60601 4th Edition Test Level**	**Compliance Level**	**Electromagnetic Environment – Guidance**
Electrostatic discharge (ESD) IEC 61000-4-2	±8 kV contact ±15 kV air	±8 kV contact ±15 kV air	Floors should be wood, concrete or ceramic tile. If floors are covered with synthetic material, the relative humidity should be at least 30%.
Electrical fast transient/burst IEC 61000-4-4	±2 kV for power supply lines ±1 kV for input/output lines	±2 kV for power supply lines ±1 kV for input/output lines	Mains power quality should be that of a typical commercial or hospital environment.
Surge IEC 61000-4-5	±1 kV differential Mode ±2 kV common mode	±1 kV differential Mode ±2 kV common mode	Mains power quality should be that of a typical commercial or hospital environment.
Voltage Dips/Dropout IEC 61000-4-11	0% UT for 0.5 cycle @ 0, 45, 90, 135, 180, 225, 270 and 315 degrees. 0% UT for 1 cycle	>95% Dip for 0.5 Cycle 60% Dip for 5 Cycles 30% Dip for	Mains power quality should be that of a typical commercial or hospital environment. If the user of the STERIS 5085 SRT Surgical Table requires continued operation during power mains interruptions, it is recommended that the STERIS 5085 SRT Surgical Table be

Table 8-2. Guidance and Manufacturer's Declaration – Electromagnetic Immunity For All Equipmentand Systems (per IEC 60601-1-2, Clause 5.2.2.1) (continued)

		25 Cycles >95% Dip for 5 Seconds ————————- ————————- ———— 0% UT for 0.5 cycle @ 0, 45, 90, 135, 180, 225, 270 and 315 degrees. 0% UT for 1 cycle	powered from the equipped internal battery. **(Tested at UT = to 240 Vac and UT= 100 Vac, 50 Hz for each all test levels).**
Power frequency (50/60 Hz) magnetic field IEC 61000-4-8	30 A/m	30 A/m	Power frequency magnetic fields should be at levels characteristic of a typical location in a typical commercial or hospital environment.
NOTE: UT is the ac mains voltage prior to application of the test level.			

Table 8-3. Guidance and Manufacturer's Declaration – Electromagnetic Immunity For Equipment and Systems That Are Not Life-Supporting (per IEC 60601-1-2, Clause 5.2.2.1)

The STERIS 5085 SRT Surgical Table and related components are intended for use in the electromagnetic environment specified below. The Customer or the user should ensure this STERIS 5085 SRT Surgical Table is used in such an environment.

Immunity test	60601–1–2 Test Level	Compliance Level	Electromagnetic Environment–Guidance
			Portable and mobile RF communications equipment should be separated from the STERIS 5085 SRT Surgical Table, including cables, no less than the distance calculated/listed below: D=(3.5/V1)(Sqrt P) D=(12/V2)(Sqrt P)
Conducted RF IEC 61000-4-6	3 Vrms (Outside ISM) 6Vrms (In ISM Bands) 150 kHz to 80 MHz	(V1) = 3 Vrms (V2) = 6 Vrms (V3) = 10 Vrms	D=(12/E1)(Sqrt P) 80 to 800 MHz D=(23/E1)(Sqrt P) 800 MHz to 2.7 GHz
Radiated RF	3 V/m	(E1) = 3 V/m	where P is the max power in watts and D is the recommended separation distance in meters.

Table 8-3. Guidance and Manufacturer's Declaration – Electromagnetic Immunity For Equipment and Systems That Are Not Life-Supporting (per IEC 60601-1-2, Clause 5.2.2.1) (continued)

IEC 61000-4-3	80 MHz to 2.7 GHz		Field strengths from fixed transmitters, as determined by an electromagnetic site survey, should be less than the compliance levels (V1 and E1). Interference may occur in the vicinity of equipment containing a transmitter.
Proximity Magnetic IEC 61000-4-39	8A/m or 138.06dBµA/m (30kHz) 65A/m or 156.26dBµA/m (134.2kHz) 7.5A/m or 137.5dBµA/m (13.56MHz)		8A/m test only applies to Home Healthcare Fields

Table 8-4. Recommended Separation Distances Between Portable and Mobile RF Communications Equipment and STERIS 5085 SRT Surgical Table (per IEC 60601-1-2, Clause 5.2.2.1)

The STERIS 5085 SRT Surgical Table and related components are intended for use in the electromagnetic environment in which radiated RF disturbances are controlled. The Customer or the user can help prevent electromagnetic interference by maintaining a minimum distance between portable and mobile RF communications equipment (transmitters) and this STERIS 5085 SRT Surgical Table as recommended below, according to the minimum output power of the communications equipment.

Rated maximum output power of transmitter **W**	**Separation distance according to frequency of transmitter** **m**		
	150 kHz to 80 MHz $d = [\frac{3.5}{3}]\sqrt{P}$	**80 MHz to 800 MHz** $d = [\frac{3.5}{3}]\sqrt{P}$	**800 MHz to 2.5 GHz** $d = [\frac{7}{3}]\sqrt{P}$
0,01	**0.12**	**0.12**	**0.23**
0,1	**0.38**	**0.38**	**0.73**
1	**1.2**	**1.2**	**2.3**
10	**3.8**	**3.8**	**7.3**
100	**12**	**12**	**23**

Table 8-4. Recommended Separation Distances Between Portable and Mobile RF Communications Equipment and STERIS 5085 SRT Surgical Table (per IEC 60601-1-2, Clause 5.2.2.1) (continued)

For transmitters rated at a maximum output power not listed above, the recommended separation distance d in metres (m) can be estimated using the equation applicable to the frequency of the transmitter, where P is the maximum output power rating of the transmitter in watts (W) according to the transmitter manufacturer.
NOTE: At 80 MHz and 800 MHz, the separation distance for the higher frequency range applies. **NOTE:** These guidelines may not apply in all situations. Electromagnetic propagation is affected by absorption and reflection from structures, objects and people.

Recommendation regarding use of high frequency (HF) surgical equipment (per IEC 60601-2-46):

1. **The STERIS 5085 SRT Surgical Table is intended for use with high frequency surgical equipment.**
2. **If degradation of performance is noted the HF surgical equipment leads and return plates must be re-oriented to a more favorable position.**

Statement regarding X-Ray Attenuation:

The aluminum equivalence for the table top and the x-ray top is 2 millimeters.

WARNING

The presence of any material in the x-ray beam introduces diffusion and scattering effects. Operators should take appropriate precautions against x-ray exposure. Material placed in the path of an x-ray beam attenuate the x-ray intensity. The x-ray beam intensity must not exceed safe patient levels.

WARNING

Portable RF communications equipment (including peripherals such as antenna cables and external antennas) should be used no closer than 30 cm (12 inches) to any part of the Surgical Table, including cables specified by the STERIS. Otherwise, degradation of the performance of this equipment could result.

Examples of portable RF communications equipment include TETRA 400, GMRS 460, FRS 460, LTE Band 13 and 17, GSM 800/900, TETRA 800, iDEN 820, CDMA 850, LTE Band 5, GSM 1800, CDMA 1900, GSM 1900, DECT, LTE Band 1, 3, 4, 25; UMTS, Bluetooth, WLAN, 802.11 b/g/n, RFID 2450, LTE Band 7, and WLAN 802.11 a/n.