STERIS®

STERIS 7000–Series

General Surgical Table



Operator Manual

en
11044786
Revision C

© 2024 STERIS. All rights reserved.

Published: 2024-11-6

A Word from STERIS

Introduction

This manual contains important information on proper use and maintenance of this Surgical Table. **All personnel involved in the use and maintenance of this equipment must carefully review and comply with the Safety Precautions and instructions contained in this manual.** These instructions are important to protect the health and safety of personnel and patients involved in the use of this Surgical Table and should be retained in a conveniently accessible area for quick reference. This Surgical Table is only to be operated by users who have successfully been trained on its operation. Please contact STERIS for the required in-service and training.

Complete instructions for uncrating have been furnished. If missing, contact STERIS for a replacement copy, giving the serial and model numbers of the table. STERIS carries a complete line of accessories for use with this table. Contact STERIS for more information.

NOTE: A patient grounding post/potential equalization terminal (male connector, DIN 42801) is provided. The female connector for patient grounding is not furnished by STERIS.

Advisory

Safety Precautions and Pinch Points to be observed when operating and servicing this Surgical Table are included in this manual in the **Safety Precautions and Pinch Points** Section. Do not operate or service the table until you have become familiar with this information.

WARNING

PERSONAL INJURY AND/OR EQUIPMENT DAMAGE HAZARD



Repairs and adjustments to this equipment must be made only by STERIS or STERIS-trained service personnel. Maintenance performed by unqualified personnel or installation of unauthorized parts could cause patient injury, personal injury, result in improper equipment performance, invalidate the warranty, or result in costly damage. Contact STERIS regarding service options.

Serious incidents that have occurred in relation to this medical device should be reported to the manufacturer and competent authority in the country where the incident occurred.

FDA Indications for Use

This Surgical Table is an electromechanically operated surgical table designed to support virtually all general surgical procedures including cardiac and vascular, endoscopic, gynecology, urology, nephrectomy, neurosurgery, ophthalmologic, orthopedics and other procedures requiring intraoperative fluoroscopic C-arm imaging and also supports laparoscopic surgical technique for the largest surgical patients.

EU Medical Device Regulation

Intended Purpose: This Table is for patient positioning.

Indications for Use: This Table is indicated for patient positioning in virtually all general surgical procedures including cardiac and vascular, endoscopic, gynecology, urology, nephrectomy, neurosurgery, ophthalmologic, orthopedics and other procedures requiring intraoperative fluoroscopic C-arm imaging and also supports laparoscopic surgical technique.

Clinical Benefit: The clinical benefit of this Table is providing safe and effective patient positioning for surgical procedures.

Contraindications: There are no contraindications.

Intended Target Populations: There are no restrictions on patient population.

Intended Lifetime: 10 years.

Waste Disposal

WARNING

DISPOSAL HAZARD



This product contains materials which may require disposal through appropriately licensed and permitted hazardous waste management firms.

The following materials may be contained within the Surgical Table. When disposing of the table or its parts, ensure the proper disposal of hazardous and other regulated waste in compliance with federal, state, and local regulations.

Lead Acid (Pb/H_2SO_4): gelled cell batteries located in the table base at the head end of the table. Approximate weight 13 lb (6 kg).

Electronic and Electrical Parts: not known to require special disposal as of the date of this manual.

Metal Parts: made from aluminum (Al), steel (Fe), cast iron (Fe), copper (Cu), and copper alloys (Cu/x), plastic, synthetic rubber, plating (Cr, Ni, Zn, Au), and adhesives not known to require special disposal methods as of the date of this manual.

Polyvinylchloride (PVC): Approximate weight 1.0 lb (0.45 kg) — used as wire insulation.

Service Information

A thorough preventive maintenance program is essential for safe and proper unit operation. This manual contains basic maintenance schedules and procedures which should be followed for satisfactory equipment performance. Comprehensive instructions for monthly, quarterly and semi-annual preventive maintenance can be found in the Maintenance Manual (available from STERIS).

Only STERIS-trained personnel should attempt to perform maintenance on the table, to avoid personal injury, improper equipment performance, invalidation of the equipment warranty or other costly damage. Contact STERIS for additional information on available training programs for biomedical staff.

Customers are encouraged to contact STERIS concerning our comprehensive preventive maintenance program. Under the terms of this program, preventive maintenance, adjustments and replacement of worn parts are provided on a scheduled basis to help ensure optimal equipment performance and help avoid untimely or costly interruptions. STERIS maintains a global staff of well equipped, factory-trained technicians to provide these services, as well as expert repair services. Please contact STERIS for details.

Associated Publications

Publications listed in this section are those associated with the use and maintenance of this Surgical Table.

When ordering, please include the part number (if applicable), description and quantity of each publication requested. Order directly from STERIS.

Description	Part Number
Tech Data Sheet:	11048501
Uncrating Instructions	11044785

Description	Part Number
Operator Manual	11044786
Maintenance Manual	11044792

Contact Information

EC REP

STERIS Ireland Limited
IDA Business and Technology Park
Tullamore
County Offaly
R35 X865 Ireland

CE

MD
UDI

UKCA

UK REP

STERIS Solutions Limited
Chancery House Rayns Way
Watermead Business Park, Syston
Leicester LE7 1PF UK

CH REP

STERIS GmbH
c/o BDO AG
Längfeldweg 116A
CH-2504 Biel-Bienne
Switzerland

Manufactured by:
STERIS Corporation
2720 Gunter Park East
Montgomery, AL 36109 USA
TEL: 334 277 6660
8004449009
www.steris.com

Class 1 Equipment
Type B Equipment



Splash-Proof Equipment (enclosed equipment protected against splashing water, IPX4)



Equipment not suitable for use in the presence of a flammable anesthetic mixture with air or oxygen or nitrous oxide.

Suitable for intermittent operation 3 min ON/27 min OFF. For loads over 700 lb., Height motion duty cycle is limited to 1 minute 15 seconds ON / 58 minutes 45 seconds OFF.

The base language of this document is ENGLISH. Any translations must be made from the base language document.

TABLE OF CONTENTS

Section Number	Description	Page
1	**Safety Precautions and Pinch Points**	**1**
1.1	Introduction	1
1.2	Warning — Pinching Hazard	1
1.3	Warning — Tipping Hazard	3
1.4	Warning — Explosion Hazard	4
1.5	Warning — Tripping Hazard	4
1.6	Warning — Personal Injury Hazard	5
1.7	Warning — Instability Hazard	7
1.8	Warning — Pinching and Tipping Hazard	7
1.9	Warning — Personal Injury and/or Equipment Damage Hazard	7
1.10	Warning — Infection Hazard	9
1.11	Warning — Disposal Hazard	10
1.12	Warning — Electric Shock Hazard	10
1.13	Caution — Possible Equipment Damage	10
2	**Glossary**	**13**
2.1	Terms and Definitions	13
2.2	Table Control Symbols	14
2.3	Definition of Symbols on Table	23
3	**Important User Information**	**26**
3.1	Introduction	26
3.2	General Description	26
3.3	Technical Specifications	28
3.4	Tabletop Articulation and Patient Positioning	33
4	**Before Using The Table**	**36**
4.1	Introduction	36
4.2	Installation	36
4.3	Hand Control	43
4.4	Foot Control Operation (Optional)	45
4.5	Backup Control System	46
4.6	Installing/Removing Head Rest	46
4.7	Installing/Removing Leg Section	49
4.8	Reverse Patient Orientation	50
5	**Operating Instructions**	**52**
5.1	Introduction	52
5.2	Operating Surgical Table	53
5.3	Tabletop Section Detection	68
5.4	Collision Avoidance System	69
6	**Troubleshooting**	**71**
6.1	Introduction	71
6.2	Auxiliary Control Failure - Contact Service - ALM	73
6.3	Backup Control Failure - Contact Service - ALM	73
6.4	Backup Control Failure - Multiple Buttons Pressed - ALM	74
6.5	Battery Failure - Call Service - ALM	74
6.6	Calibration Required – Contact Service — nonALM	74

6.7 Communication Failure - Replace Hand Control or Use Backup Keypad - ALM 74
6.8 Excess Rotational Table Movement When Pushed by Hand - nonALM 75
6.9 Fault Log Warnings — ALM 75
6.10 Floor Lock Failure - ALM 75
6.11 Foot Control Failure - Replace Control or Use HC/Backup Keypad - ALM 75
6.12 Hand Control Does Not Turn On — nonALM 76
6.13 Hand Control Failure – Replace Hand Control or Use Backup Control — ALM 76
6.14 Memory Error - Contact Service - ALM 76
6.15 Motion Stopped - Multiple Buttons Pressed - ALM 76
6.16 Motion Unavailable - Contact Service - ALM 77
6.17 Noise or Vibration During Kidney Bridge Raise/Lower— nonALM 77
6.18 Noise or Vibration During Leg Section Raise/Lower — nonALM 77
6.19 Noise or Vibration During Slide — nonALM 77
6.20 Noise or Vibration During Trendelenburg/Reverse Trendelenburg — nonALM 78
6.21 Noise or Vibration When Raising/Lowering — nonALM 78
6.22 Section Detection Error - Remove and Reinstall Section - ALM 78
6.23 Service Needed - Table Functional — ALM 78
6.24 Table Cannot Complete Motion – Contact Service, If Fault Repeats - ALM 79
6.25 Table Failure - Contact Service - ALM 79
6.26 Table Failure - Power Off Then Back On - ALM 79
6.27 Table Overheating, Wait and Try Motion Again - ALM 79
6.28 Update Required - Contact Service - ALM 80
7 Routine Maintenance 81
7.1 Introduction 81
7.2 Routine Maintenance Schedule 81
7.3 Cleaning Surgical Table 82
7.4 Replacement Parts 87
7.5 LEVEL Check 89
7.6 Backup Control System Check 89
7.7 Battery Charging 89
8 Appendix A - EMC Compliance 92
8.1 EMC Compliance Technical Data — AC Power 92
8.2 EMC Compliance Technical Data - Battery Power 97

Safety Precautions and Pinch Points

1.1 Introduction

The following *Safety Precautions* **must** be observed when operating or servicing this Surgical Table. For emphasis, certain *Safety Precautions* are repeated throughout the manual.

- **WARNING** indicates the potential for personal injury.
- **CAUTION** indicates the potential for damage to equipment.

It is important to review ALL *Safety Precautions* before operating, uncrating, testing, or servicing the table.

Strictly following these *Safety Precautions* enhances your ability to safely and effectively utilize the Surgical Table and helps the Customer avoid improper maintenance methods that may damage the table or render it unsafe. It is important to understand that these *Safety Precautions* are not exhaustive; Customers are encouraged to develop their own safety policies and procedures to enhance and complement these *Safety Precautions*.

IMPORTANT: *Please read the Operator Manual to get the best understanding and to help ensure best performance of this Surgical Table.*

Any maintenance performed on this Surgical Table, other than described in the manual (unless by authorized representatives of STERIS), shall be at the risk of invalidating the table warranty.

NOTE: Disregarding the presented safety information is considered ABNORMAL USE of this product.

1.2 Warning — Pinching Hazard

WARNING

PINCHING HAZARD

⚠ Pinch points are created during extreme tabletop articulation. Carefully review the illustrations in *Section 1.2, Warning — Pinching Hazard*, before operating the table.

⚠ To avoid serious injury, keep limbs, fingers, and other body areas clear of all pinch points when positioning the table.

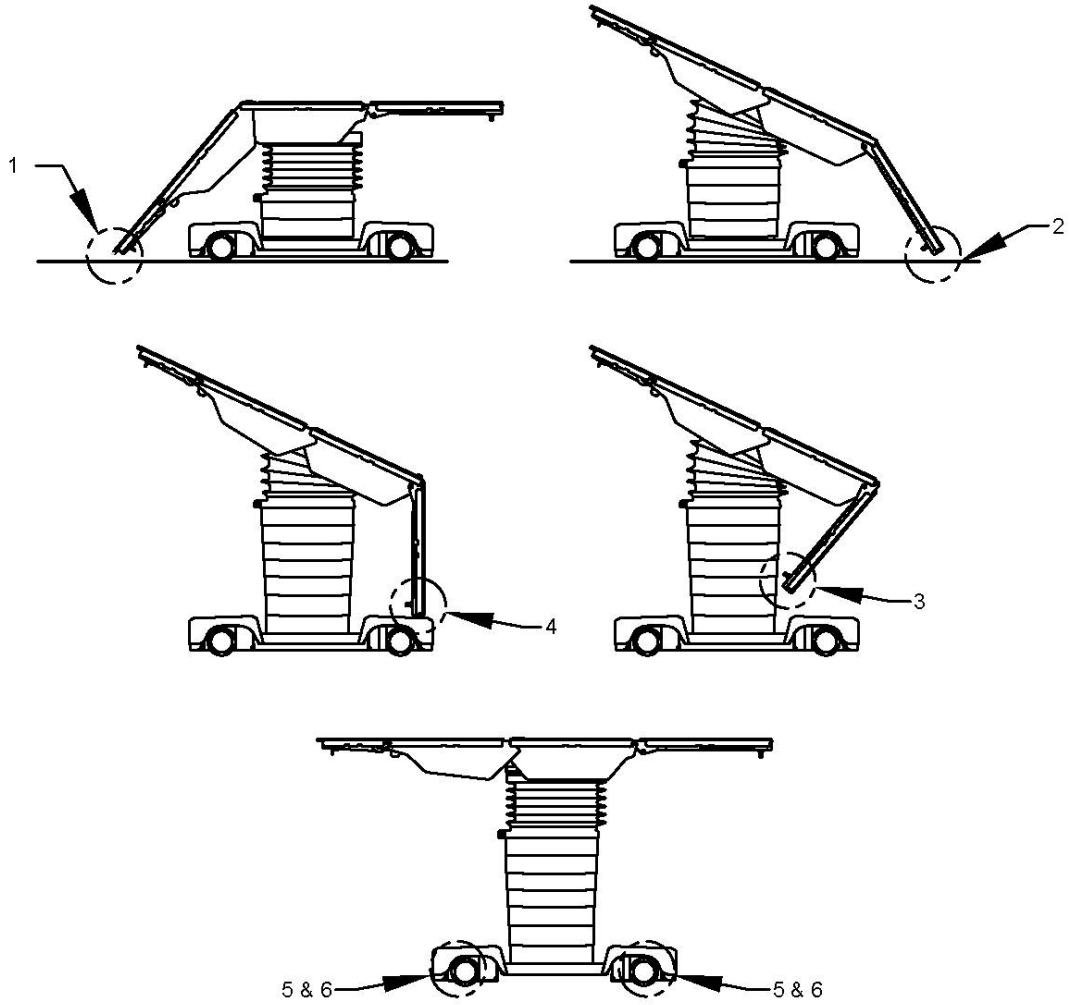

Figure 1-1. Table Pinch Points

PINCH POINTS:

1. Between Head Section and Floor
2. Between Leg Section and Floor
3. Between Leg Section and Column Cover
4. Between Leg Section and Base Cover
5. Between Casters and Base Cover
6. Between Floor Locks and Floor

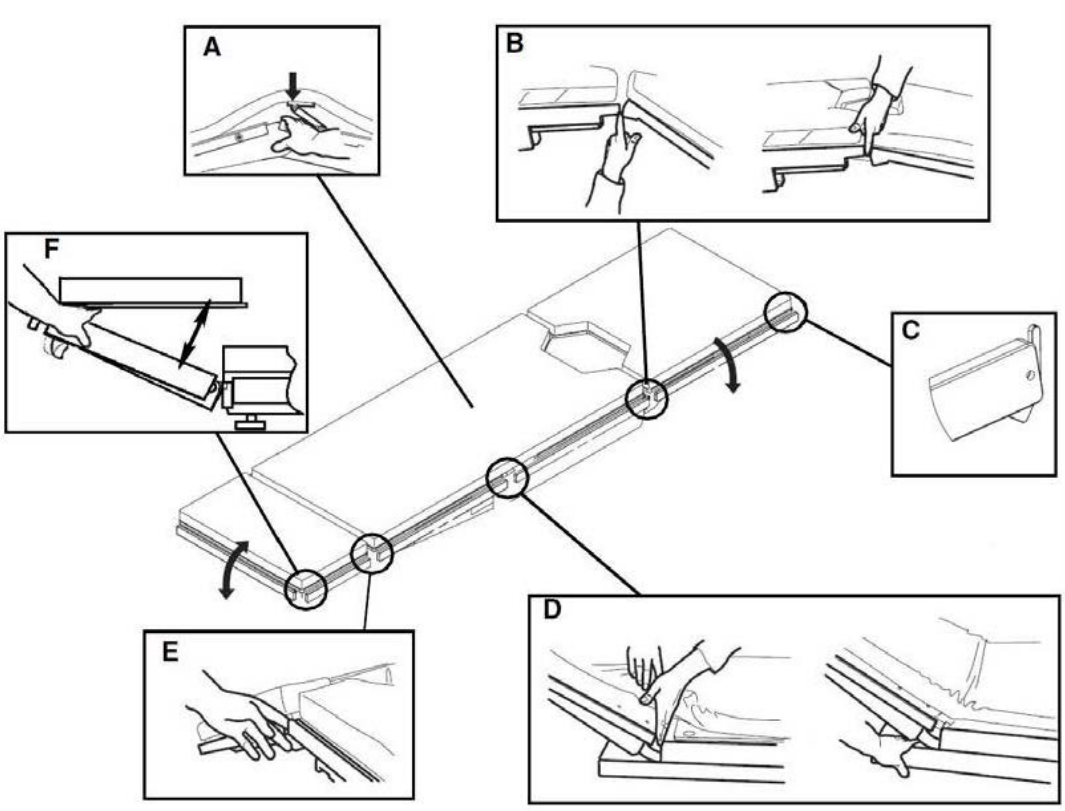

Figure 1-2. Tabletop Pinch Points

PINCH POINTS:

- A — Between Kidney Elevator Mechanism and Seat Section
- B — Between Leg Section and Seat Section
- C — Side Rail Lock
- D — Between Back Section and Seat Section
- E — Between Head Section and Back Section
- F – Between Head Board and Head Section Base

1.3 Warning — Tipping Hazard

WARNING

TIPPING HAZARD

Do not load, place, or transfer patient on the table unless floor locks are engaged.

Engage floor locks and center tabletop over column before loading, placing, or transferring patient on or off of Surgical Table.

Center tabletop over column before applying chest compressions.

This Surgical Table is not to be used to transport patients. With exception of minor repositioning, as detailed in the operating instructions, never disengage floor locks when patient is on table. Failure to heed this warning can result in injury to both the patient and the operating room staff.

Risk of tipping during Surgical Table transport. Place Table in Transport Position prior to moving Table to another location. Avoid traveling over an incline greater than 5 degrees.

Do not use this Surgical Table for patients exceeding the maximum patient weight of the following Table positions:

- 1200 lb (544 kg) Load, Normal Patient Orientation; raise or lower only (no tabletop articulation or slide).
- 1000 lb (454 kg) Load, Normal and Reverse Patient Orientation; raise or lower; includes all tabletop articulation except tabletop slide.
- 700 lb (318 kg) Load, Normal and Reverse Patient Orientation; raise or lower; includes all tabletop articulation and full tabletop slide.

1.4 Warning — Explosion Hazard

WARNING

EXPLOSION HAZARD

Surgical Table must not be used in the presence of flammable anesthetics.

1.5 Warning — Tripping Hazard

WARNING

TRIPPING HAZARD

Route the power cord to the receptacle to minimize being tripped over by personnel in the area.

1.6 Warning — Personal Injury Hazard

WARNING

PERSONAL INJURY HAZARD

The presence of any material in the X-ray beam introduces diffusion and scattering effects. Operators should take appropriate cautions against X-ray exposure. Material placed in the path of an X-ray beam attenuates the X-ray intensity. The X-ray intensity must not exceed safe patient levels.

Unanticipated software failure could prevent Surgical Table movements.

Healthcare professionals must ensure patients are positioned and monitored to prevent compromising respiration, nerve pathways, or circulation issues.

When installing any Table Accessory, check for correct attachment and tighten securely (if appropriate). Do not use worn, damaged, or malfunctioning accessory. Check for proper installation before using any accessory.

Unanticipated table movement could cause patient injury. Patient must be secured to the table in accordance with recommended positioning practices and ensure proper floor lock engagement before loading a patient.

Patient injury may result if the operator of this table is not completely familiar with the controls for patient positioning and table operation. All users should carefully review the Operator Manual before operating the table.

When cleaning/disinfecting table, do not use phenolics, which may cause patient skin burns if inadequately rinsed off. Do not use alcohol, which does not have sufficient cleaning/disinfection properties.

If an antistatic path is necessary, STERIS recommends antistatic pads (specifically developed for this table) in direct contact with the patient. STERIS recommends that the table be positioned on antistatic floor or connected to equalization device (equipotential connector).

Center tabletop over column before applying chest compressions.

Engage floor locks and center tabletop over column before loading, placing, or transferring patient on or off of Surgical Table.

Failure to keep the patient properly secured with the patient safety straps at all times could result in patient death or serious injury.

This Surgical Table is not to be used to transport patients. With exception of minor repositioning, as detailed in the operating instructions, never disengage floor locks when patient is on table. Failure to heed this warning can result in injury to both the patient and the operating room staff.

Keep hands and feet clear of the unloading platform and the Surgical Table base when unloading the table. Serious personal injury could result.

Do not exceed 600 lb (272 kg) on the leg section.

Do not remove table leg section if patient is not properly positioned. Patient's torso and buttocks must be firmly held in place by table back and seat sections and legs supported by leg supports.

Appropriate components of this Surgical Table have been tested and found in compliance with IEC 60601-2–46, 3rd Edition, Medical Electrical Equipment - Part 2–46: Particular requirements for the basic safety and essential performance of operating tables. There is, however, a potential that high frequency surgical equipment, cardiac defibrillators or cardiac defibrillator-monitors could interfere with this equipment and cause unanticipated table movement producing possible patient and/or staff injury. Should user experience interference, relocate this device or minimize the use of the interfering equipment while this device is in operation.

1.7 Warning — Instability Hazard

WARNING

INSTABILITY HAZARD

⚠ Possible patient or user injury, as well as Surgical Table or accessory failure, may result from using STERIS table accessories for other than their stated purpose - or from using accessories manufactured and sold by other companies for use on STERIS surgical tables.

1.8 Warning — Pinching and Tipping Hazard

WARNING

PINCHING AND TIPPING HAZARD

⚠ Patient injury may result if the operator of this Surgical Table is not completely familiar with the controls for tabletop articulation and table operation. All users should carefully review the Operator Manual before operating the table and be familiar with the operation before use on Patients.

1.9 Warning — Personal Injury and/or Equipment Damage Hazard

WARNING

PERSONAL INJURY AND/OR EQUIPMENT DAMAGE HAZARD

⚠ Repairs and adjustments to this equipment must be made only by STERIS or STERIS-trained service personnel. Maintenance performed by unqualified personnel or installation of unauthorized parts could cause patient injury, personal injury, result in improper equipment performance, invalidate the warranty, or result in costly damage. Contact STERIS regarding service options.

⚠ Regularly scheduled preventive maintenance is required for safe and reliable operation of this equipment. Contact STERIS to schedule preventive maintenance.

⚠ Do not service or perform maintenance on equipment while in use.

⚠ Ensure that when not in use, the Surgical Table is positioned on a level floor, or the floor locks are engaged, to prevent unintended motion of the table.

Failure to perform periodic inspections of this Surgical Table per STERIS documentation could result in serious personal injury or equipment damage.

Before attempting to attach or remove a Table Accessory, be cautious of the weight of the accessory to avoid table damage and/or personal injury.

Use of accessories, transducers, and cables other than those specified or provided by the manufacturer of this equipment could result in increased electromagnetic emissions or decreased electromagnetic immunity of this equipment and result in improper operation.

Do not store items on Surgical Table base. Doing so may result in equipment damage or inadvertent tabletop movement placing the patient and/or user at risk of injury.

Failure to keep all personnel and equipment clear of the Surgical Table before actuating any inertia-driven or power-driven movement could result in Table damage and/or personal injury.

The headrest rail supports 50 ft-lb (67 Nm) maximum. Exceeding these limits could result in injury or equipment damage.

To prevent column cover from falling, securely hold column cover when removing the fastening screws.

Ensure tabletop is adequately supported before performing maintenance requiring tabletop to be maintained in the raised position.

Use of this Surgical Table in the presence of flammable anesthetics could result in serious personal injury and/or table damage.

Use of this equipment adjacent to or stacked with other equipment should be avoided because it could result in improper operation. If such use is necessary, this equipment and the other equipment should be observed to verify that they are operating normally.

This equipment/system is intended for use by healthcare professionals only. This equipment/system may cause radio interference or may disrupt the operation of nearby equipment. It may be necessary to take mitigation measures, such as re-orienting or relocating the nearby equipment, the Table, or shielding the equipment/location.

Exercise caution when attempting to remove cable from tilt wire management sheave. Sheave is spring-loaded and pulls toward the Surgical Table head end. Do not manually slide wire management sheave.

Before loosening screw on Tilt Adjustment Wedge, support Table in tilt direction or damage to Table and/or personal injury may occur. Disengaging tilt actuator from rack allows tabletop to pivot freely.

1.10 Warning — Infection Hazard

WARNING

INFECTION HAZARD

To protect against aerosols being reflected from contaminated surfaces, wear appropriate PPE, including, but not limited to, rubber or plastic gloves, masks, and eye protection and follow OSHA blood-borne pathogens standards when cleaning.

When cleaning/disinfecting Surgical Table, do not use alcohol which does not have sufficient cleaning/ disinfection properties.

Gloves and eye protection are required for repair procedures. Areas of the Surgical Table may have biohazard materials, so decontaminate before using tools, and note that the use of tools may dislodge this material onto clothing or face. Before loosening or hammering on a part, note if any biohazard material is present and take proper precautions.

1.11 Warning — Disposal Hazard

WARNING

DISPOSAL HAZARD

⚠ This product contains materials which may require disposal through appropriately licensed and permitted hazardous waste management firms.

1.12 Warning — Electric Shock Hazard

WARNING

ELECTRIC SHOCK HAZARD

⚠ Unplug Surgical Table from Facility electrical supply and remove battery fuse before servicing. Always follow electrical safety-oriented work practice standards.

⚠ Before replacing PC boards or power supply assembly, disconnect all power sources; i.e., wall plug and motor/control battery positive terminals.

⚠ To avoid the risk of electric shock, this equipment must only be connected to a supply mains with protective earth ground.

⚠ Operator must not simultaneously touch a patient and the section detection low voltage electrical contacts in the leg section receptacles or the head end of the back section.

1.13 Caution — Possible Equipment Damage

CAUTION

POSSIBLE EQUIPMENT DAMAGE

⚠ When moving the Surgical Table to or from point of use, roll it carefully at moderate speed and only over smooth floors. Maximum floor clearance is 0.86" (22.0 mm). Avoid door and elevator jambs, and obstructions with a height greater than 1/2" (12.7 mm) and a gap greater than 1.25" (31.75 mm). If necessary, lift table over obstructions, onto trucks, etc. Lift table evenly and only by the table base. DO NOT transport articles (including accessories) on top of the table, and **DO NOT use a forklift to move the uncrated table**.

⚠ Hang the Hand Control from side rail of the Surgical Table when not in use to avoid possible damage to the control.

⚠ When cleaning/disinfecting Surgical Table, thoroughly read the cleaning fluid directions for use and follow all manufacturers directions, instructions, and cautions.

⚠ Do not spray cleaning fluid into electric receptacles. Spray or drippage may settle onto electric circuits inside table causing corrosion and loss of function.

⚠ Cleaning procedures requiring articulation of the Surgical Table should be performed only by persons familiar with table operation.

⚠ Route the hand control cord clear of any pinch points where cord or hand control could be damaged.

⚠ After performing cleaning procedures, ensure pads and tabletop are completely dry before reinstalling. Failure to do so can result in damage to tabletop and pads.

⚠ Portable RF communications equipment (including peripherals such as antenna cables and external antennas) should be used no closer than 30 cm (12 inches) to any part of the STERIS 7000-Series General Surgical Table. Otherwise, degradation of the performance of this equipment could result.

⚠ This device has not been tested for compatibility with all other potential RF Emitters such as X-ray, Metal Detectors, Electrosurgical Equipment, Diathermy Equipment, 5G Cellular, NFC, WPT, or Electronic Article Surveillance (EAS) devices. Caution should be used if such emitters are present within the use environment.

⚠ A risk of increased or decreased emissions immunity may result if any additional cables are attached.

⚠ The electromagnetic emissions characteristics of this equipment make it suitable for use in industrial areas and hospitals (CISPR 11 Class A).

⚠ Do not pull the Hand Control cord when disconnecting Hand Control from Surgical Table. This can result in damage to the cord and/or connectors.

⚠ Static electricity can damage PCBs. Indiscriminate probing of circuits or improper connections may result in immediate or delayed electrical failure. If the electronics are to be accessed, use a personal grounding device. Exercise care in all activities involving the electronic circuitry.

⚠ Always remove power from Surgical Table when servicing control PCBs to prevent any electrical shorting. Use of a strap to help hold control assembly out of the way is recommended.

⚠ If the Surgical Table is not plugged in, protect the ac receptacle from liquid during cleaning and use. After cleaning and use, visually inspect for moisture in the ac receptacle before reconnecting power cord. Ensure cord and receptacle are completely dry before connecting to Facility power.

⚠ The Backup Control touch pad connector is very delicate and care must be taken to gently pry up the connector. Use finger nails to pry up the clip, do not use a metal tool. Gloves are not to be worn when performing this task.

Glossary

2.1 Terms and Definitions

Accessories — Optional surgical procedure devices to facilitate patient posturing that attach to the Surgical Table usually at the Surgical Table head and leg receptacles and Side Rails.

ABS — Acrylonitrile Butadiene Styrene Plastic.

Apron — Tabletop Seat and Back Sections cover that extends below the Surgical Table surface. Used to cover the actuators.

Articulation — Movement of one or more sections of the Surgical Table.

Backup Control — Located on Surgical Table Column. Includes a keypad for Surgical Table commands: ON/OFF, Floor Lock lock/unlock, table motion.

Backup Control System — Actuated at any time to allow Surgical Table operation in the event of Hand Control or power malfunction. Backup Control permits operation of this system.

CAN — Controller Area Network.

Capacity — The total combined weight of the patient and accessories that the Surgical Table can sustain while performing a variety of Articulations.

Flex — Tabletop position where back section moves down and Tabletop moves into Reverse Trendelenburg.

Foot Control — Physician control of Surgical Table using foot pedals. Hand Control selections halt Foot Control selections.

Floor Locks — Electrically operated Surgical Table locking system located in the Surgical Table base to prevent the table from moving.

Hand Control — The primary interface for Surgical Table operation. Hand Control is equipped with a 20' (6.2 m) extended long detachable cord. The Hand Control plugs into a receptacle located at the top of the Table Column. Membrane touch switches provide, through an auxiliary CPU, input signals to activate table functions and articulations. Also includes a flashlight.

HMI — Human Machine Interface (such as Hand, Foot, or Backup Control).

I/O — Input/Output.

LCD Display — Hand Control Liquid Crystal Display indicating Surgical Table status, Tabletop positioning, and control system messages to user.

LED — Light Emitting Diode.

Main Power Panel — Located at head-end of the Table Base. Contains AC receptacle for power cord, primary and battery fuses, Battery Level Indicator Display, and ground equalization terminal (male connection).

Normal Patient Positioning or Orientation — Head section is secured to end of back section. Patient is positioned on Surgical Table with head on head section.

Pinch Point — During patient positioning or Tabletop movement where a potential exists for pinching a hand or foot of the patient or healthcare professional using the Surgical Table.

PPE —Personal Protective Equipment. Safety shoes, protective sleeves, rubber or plastic gloves, masks, and eye protection (eg., safety glasses and/or face shield).

Reflex —Tabletop position where back section moves up and Tabletop moves into Trendelenburg position.

Reverse Orientation — Touch pad on Hand Control. Press this touch pad to change patient orientation (NORMAL or REVERSE). Yellow LED indicates patient in reverse orientation; Green LED indicates patient in normal orientation.

Reverse Patient Positioning —Head section is secured to end of leg section. Patient is positioned on Surgical Table with head on head section and back on leg section.

Reverse Trendelenburg — While in Normal Orientation, lowering of Tabletop leg or foot section toward the floor while raising the head section.

Side/Accessory Rail — Stainless-Steel rail attached to both sides of Surgical Table Tabletop.

Surgical Table — STERIS 7080 General Surgical Table.

Table Base — Painted welded steel covered by stainless-steel enclosure. Base contains Table Column, casters, floor locks, power assembly, and Backup Control. Base can be fixed, mobile, or movable.

Table Column — Supports Tabletop and includes one or multiple stage sections that telescope or nest to provide raising or lowering of the Tabletop. Covered and protected by 7-stage stainless-steel shrouds.

Tabletop — Patient support surface. Four section (head, back, seat, and leg) phenolic top supported by the Table Column and Table Base.

Tilt — Lateral Tilt, movement of the Tabletop laterally (above and below horizontal plane).

TLT Pads — Tri-Layer Technology Surgical Table Pads.

Trendelenburg — While in Normal Orientation, lowering of Tabletop head section toward the floor while raising the leg section.

X-ray Channel — An integrated channel located below the Tabletop that permits easy loading of digital and film X-ray cassettes along the entire length of the Surgical Table.

2.2 Table Control Symbols

This section identifies the Hand Control symbols (see *Figure 2-1* and *Figure 2-2*), Backup Control buttons (see *Figure 2-3* and *Figure 2-4*, and the symbols which can present themselves on the Hand Control LCD Display bar.



Figure 2-1. Typical Hand Control (North America)



Figure 2-2. Typical Hand Control (Outside North America)

Table 2-1. Definition of Symbols on Hand Control

Symbol	Button Color	Definition
	White	FLOOR LOCK STATUS: LEDs are lit Green when floor locks are engaged and white when not engaged. Press and Hold button for 3 seconds to engage floor locks.
	White	SETTINGS: Allows User to change language and units of measurement on the Hand Control. It also allows access to the last 10 errors recorded by Surgical Table control system. Green when menu is open.
	White	FLOOR LOCK STATUS: LEDs are lit Green when floor locks are not engaged and white when engaged. Press and Hold button for 3 seconds to disengage floor locks.
	White	REVERSE ORIENTATION: Press and Hold button for 2 seconds to reverse the orientation.
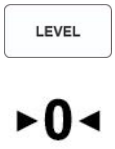	White	LEVEL: Move Tabletop to Level position and center Slide.
	Orange	TRENDELENBURG: Move Tabletop into Trendelenburg (TREND).
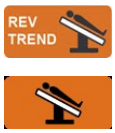	Orange	TRENDELENBURG: Move Tabletop into Reverse Trendelenburg (REVERSE TREND).
	Gray	TILT: Tilt Tabletop Left (TILT LEFT).
	Gray	TILT: Tilt Tabletop Right (TILT RIGHT).
	Light Purple	HEIGHT: Tabletop Up (HEIGHT UP; Raise).

Table 2-1. Definition of Symbols on Hand Control (continued)

Symbol	Button Color	Definition
		
	Light Purple	HEIGHT: Tabletop Down (HEIGHT DOWN; Lower).
	Green	SLIDE: Slide Tabletop Toward Head End (SLIDE HEAD).
	Green	SLIDE: Slide Tabletop Toward Foot End (SLIDE FOOT).
	Gray	BACK: Tabletop Back Section Up (BACK UP).
	Gray	BACK: Tabletop Back Section Down (BACK DOWN).
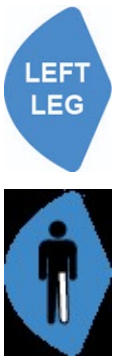	Blue	LEFT LEG: Tells Control that LEG UP and LEG DOWN buttons are for the LEFT Leg. **NOTE:** This Icon is only active when a Split Leg Section has been installed on the Surgical Table. Green indication if leg is selected.
	Blue	RIGHT LEG: Tells Control that LEG UP and LEG DOWN buttons are for the RIGHT Leg. **NOTE:** This Icon is only active when a Split Leg Section has been installed on the Surgical Table. Green indication if leg is selected.

Table 2-1. Definition of Symbols on Hand Control (continued)

Symbol	Button Color	Definition
		
	Blue	LEG: Tabletop Leg Section Up (LEG UP).
	Blue	LEG: Tabletop Leg Section Down (LEG DOWN).
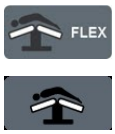	Gray	FLEX: Move Tabletop into Flex Position.
	Gray	BEACH CHAIR: Move Tabletop into Beach Chair Position.
	Gray	KIDNEY: Tabletop Kidney Section Up (KIDNEY UP).
	Gray	KIDNEY: Tabletop Kidney Section Down (KIDNEY DN).
	White	FLASH LIGHT: Turns ON/OFF Hand Control flash light.
	Red	POWER: Turn Surgical table power ON/OFF. Press and Hold button for 3 seconds to Power ON/OFF the Surgical Table.

Table 2-2. Definition of Hand Control LCD Display Bar Icons

Symbol	Color	Definition
	Yellow	ACTIVE ALERTS: Only appears when there are active Alerts on the Surgical Table
	White	BACKUP PANEL ACTIVE: Only appears when Backup Control is active
	White	REVERSE ORIENTATION: Only appears when Surgical Table is in Reverse Orientation
	White	FLOOR LOCK STATUS: This Icon is always shown on display (either Locked or Unlocked)
	Various	BATTERY STATUS: This Icon is always shown on display



Figure 2-3. Typical Backup Control (North America)

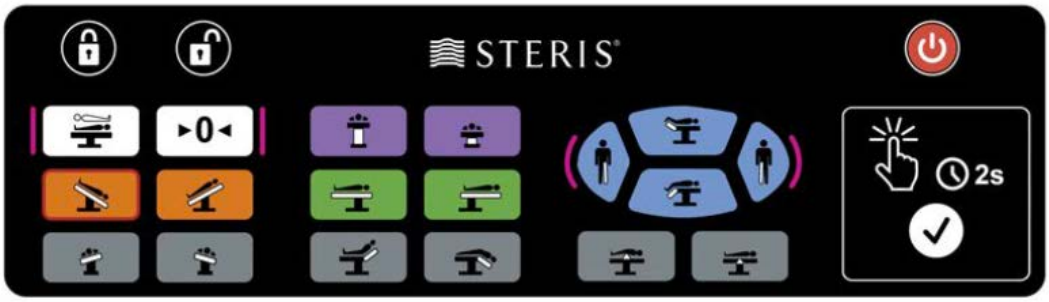

Figure 2-4. Typical Backup Control (Outside North America)

Table 2-3. Definition of Symbols on Backup Control

Symbol	Color	Definition
	White	FLOOR LOCK STATUS: LEDs are lit Green when floor locks are engaged and white when not engaged. Press and Hold button for 3 seconds to engage floor locks.
	White	FLOOR LOCK STATUS: LEDs are lit Green when floor locks are not engaged and white when engaged. Press and Hold button for 3 seconds to disengage floor locks.
	White	REVERSE ORIENTATION: Press and Hold button for 2 seconds to reverse the orientation.
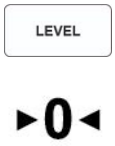	White	LEVEL: Move Tabletop to Level position and center Slide.
	Orange	TRENDELENBURG: Move Tabletop into Trendelenburg (TREND)
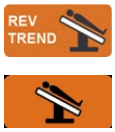	Orange	TRENDELENBURG: Move Tabletop into Reverse Trendelenburg (REVERSE TREND)
	Gray	TILT: Tilt Tabletop Left (TILT LEFT)
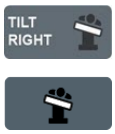	Gray	TILT: Tilt Tabletop Right (TILT RIGHT)
	Light Purple	HEIGHT: Tabletop Up (HEIGHT UP; Raise)
	Light Purple	HEIGHT: Tabletop Down (HEIGHT DOWN; Lower)

Table 2-3. Definition of Symbols on Backup Control (continued)

Symbol	Color	Definition
		
	Green	SLIDE: Slide Tabletop Toward Head End (SLIDE HEAD)
	Green	SLIDE: Slide Tabletop Toward Foot End (SLIDE FOOT)
	Gray	BACK: Tabletop Back Section Up (BACK UP)
	Gray	BACK: Tabletop Back Section Down (BACK DOWN)
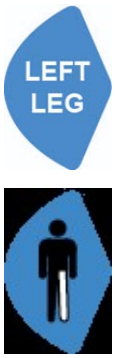	Blue	LEFT LEG: Tells Control that LEG UP and LEG DOWN buttons are for the LEFT Leg. **NOTE:** This Icon is only active when a Split Leg Section has been installed on the Surgical Table. Green indication if leg is selected.
	Blue	RIGHT LEG: Tells Control that LEG UP and LEG DOWN buttons are for the RIGHT Leg. **NOTE:** This Icon is only active when a Split Leg Section has been installed on the Surgical Table. Green indication if leg is selected.

Table 2-3. Definition of Symbols on Backup Control (continued)

Symbol	Color	Definition
	Blue	LEG: Tabletop Leg Section Up (LEG UP)
	Blue	LEG: Tabletop Leg Section Down (LEG DOWN)
	Gray	KIDNEY: Tabletop Kidney Section Up (KIDNEY UP)
	Gray	KIDNEY: Tabletop Kidney Section Down (KIDNEY DOWN)
	Red	POWER: Turn Surgical table power ON/OFF. Press and Hold button for 3 seconds to Power ON/OFF the Surgical Table.
	White	PRESS FIRST: Activation button. Press and Hold button for 2 seconds to activate Backup Control Panel. Green when active.

2.3 Definition of Symbols on Table

The following is a key to symbols on the Surgical Table.

	Refer to Instructions.
	Protective Earth (Ground)

	Attention, Consult Manual for Further Instructions
	Equipotentiality
	Electric Shock Hazard
	Type B Equipment
	Safety Warning
	Pinch Points
IPX4	IEC 60529 Code Regarding Ingress Protection
A	Amperage Rating of the Surgical Table
V	Voltage Rating of the Surgical Table
~	Alternating Current Symbol
kW	Power Rating of the Surgical Table
Hz	Frequency of AC Power to the Surgical Table.
REF	Reference Number or Equipment Number
MD	Medical Device

	Unique Device Identifier
	Hand Control Socket Label
	Foot Switch Socket Label
	Leg Section Engagement Label
	Do Not remove SD Card Label
	Do Not Transport Patient on Table
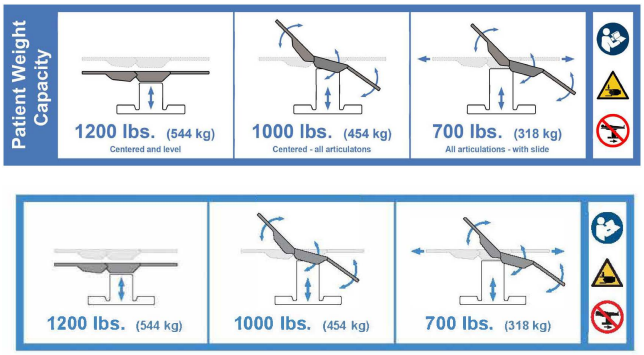	Patient Weight Capacity Label (Weight/Slide/Articulations)

Important User Information

3.1 Introduction

IMPORTANT: *This Surgical Table is only to be operated by users who have successfully been trained on its operation. Please contact STERIS for the required in-service and training.*

The product literature included in this section contains data relating to the principal characteristics of the Surgical Table and basic patient positioning.

The literature is informative rather than instructional. It provides and conveys, through text and illustrations, a general concept of the equipment, its purpose, limitations, and technical applications.

3.2 General Description

WARNING

PERSONAL INJURY HAZARD



Appropriate components of this Surgical Table have been tested and found in compliance with IEC 60601-2–46, 3rd Edition, Medical Electrical Equipment - Part 2–46: Particular requirements for the basic safety and essential performance of operating tables. There is, however, a potential that high frequency surgical equipment, cardiac defibrillators or cardiac defibrillator-monitors could interfere with this equipment and cause unanticipated table movement producing possible patient and/or staff injury. Should user experience interference, relocate this device or minimize the use of the interfering equipment while this device is in operation.

This mobile general Surgical Table (see *Figure 3-1*) is specifically designed to provide complete tabletop articulation flexibility, extended imaging window, and low tabletop height required for modern surgical care facilities. It features powered floor locks, adjustable height, sliding tabletop, Trendelenburg/Reverse Trendelenburg, lateral tilt, back up/down, leg up/down, flex, kidney elevator, and beachchair.

Additional features include:

- 1200 lb (544 kg) Load, Normal Patient Orientation; raise or lower only (no tabletop articulation or slide).
- 1000 lb (454 kg) Load, Normal and Reverse Patient Orientation; raise or lower; includes all tabletop articulation except tabletop slide.
- 700 lb (318 kg) Load, Normal and Reverse Patient Orientation; raise or lower; includes all tabletop articulation and full tabletop slide.
- Constructed of structural steel, aluminum alloy, stainless steel, and other high quality materials.
- Equipped with a 21.6" (547 mm) sliding tabletop providing unrestricted radiological access without patient reversing.
- Powered by either internal battery or standard wall power electricity.
- Can be used in combination with surgical robots, without communication interconnectivity.

The table accepts positioning commands from three sources

1. **Hand Control**.
2. Optional user-controlled **Foot Control** (which includes Trendelenburg Tilts, Lateral Tilts, and Height functions).
3. **Backup Control Panel** (available if loss of Hand Control functionality).



Figure 3-1. Table Components (Typical)

KEY:

1. Tabletop
2. Head Section
3. Back Section
4. Seat Section
5. Leg Section
6. Bellows
7. Backup Panel
8. Table Base
9. Connection Panel
10. Column
11. Power Panel
12. Main Power Inlet
13. Primary Fuse
14. Battery Fuse
15. Battery Power Indicator
16. Identification Label (UDI)
17. Ground Equalization Terminal (Male Connection)
18. AC Power On/Off Indicator
19. Power Cord (Not Shown)
20. Hand Control

3.3 Technical Specifications

This section includes the following:

Essential Performance
Overall Size (W x L x H)
Weight
Power
Environmental Conditions
Transportation/Storage Conditions
Image Amplification Coverage
Range of Motion
Transport
EMC/High-Frequency Interference

Essential Performance

The essential performance of this Surgical Table system is supporting a patient without unwanted movement.

This Surgical Table is single fault safe which means that essential performance is maintained in the case of a single fault condition.

Overall Size (W x L x H)

25 x 83 x 22 to 44.7" (638 x 2111 x 559 to 1136 mm)

See *Figure 3-2* and *Figure 3-3*.

NOTE: Inch measurements are approximate based on metric dimensions.

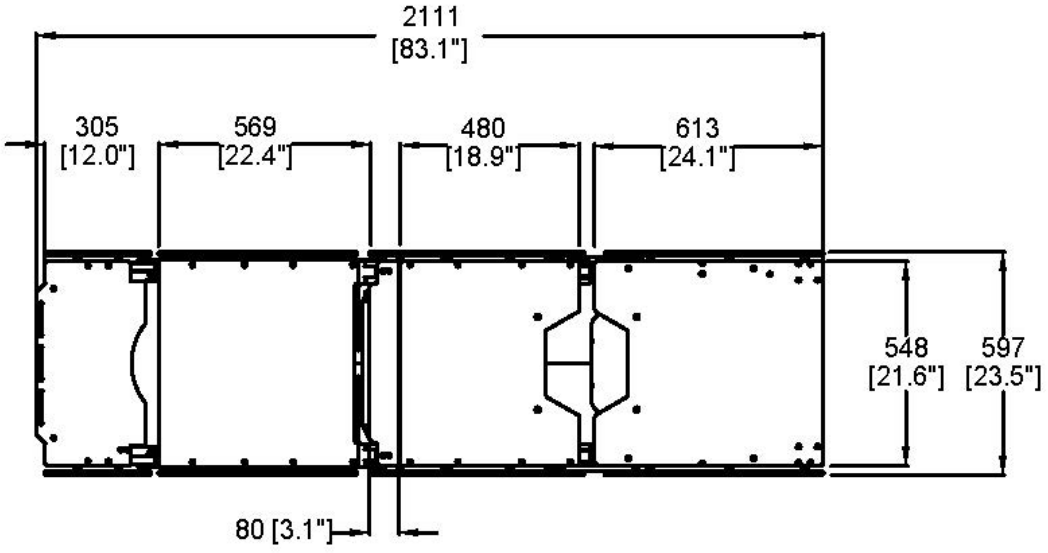

Figure 3-2. STERIS 7000–Series Tabletop Dimensions (Typical)

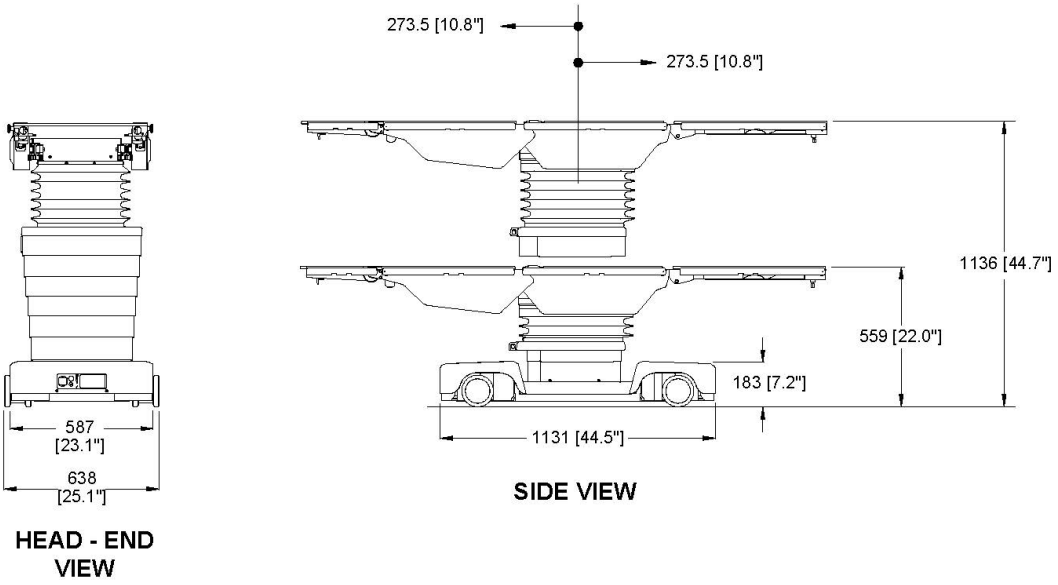

Figure 3-3. Base Dimensions (Typical)

Weight

Table: Approximately 770 lb (349 kg)

Power

Line Power Input: 100-240 Vac, 10 – 4 Amp, Single-Phase, 50/60 Hz

AC Main Fuse:

- Rating: 12 Amps, Time-Lag
- High Breaking Capacity
- Interrupt Rating: 1500 Amp @ 250 Vac

Battery Fuse:

- Rating: 30 Amps, Time Delay
- Interrupt Rating: 10 kA @ 60 Vdc

Environmental Conditions

Temperature: 63 - 77 °F (17-25 °C)

Relative Humidity: 20 - 75% RH

Atmospheric Pressure: 700 - 1060 hPa

Transportation/Storage Conditions

Ambient Temperature: -20 - 140 °F (-29 - 60 °C)

Relative Humidity: up to 85% RH

Atmospheric Pressure: 500-1060 hPa

NOTE: If the Table remains in extended storage for longer than three months, recharge the batteries every three months.

Image Amplification Coverage

WARNING

PERSONAL INJURY HAZARD

The presence of any material in the X-ray beam introduces diffusion and scattering effects. Operators should take appropriate cautions against X-ray exposure. Material placed in the path of an X-ray beam attenuates the X-ray intensity. The X-ray intensity must not exceed safe patient levels.

Image amplification coverage is represented in a dimensional drawing (see *Figure 3-4*).

NOTE: For X-ray attenuation, the aluminum equivalence for the tabletop is 2.3 millimeters.

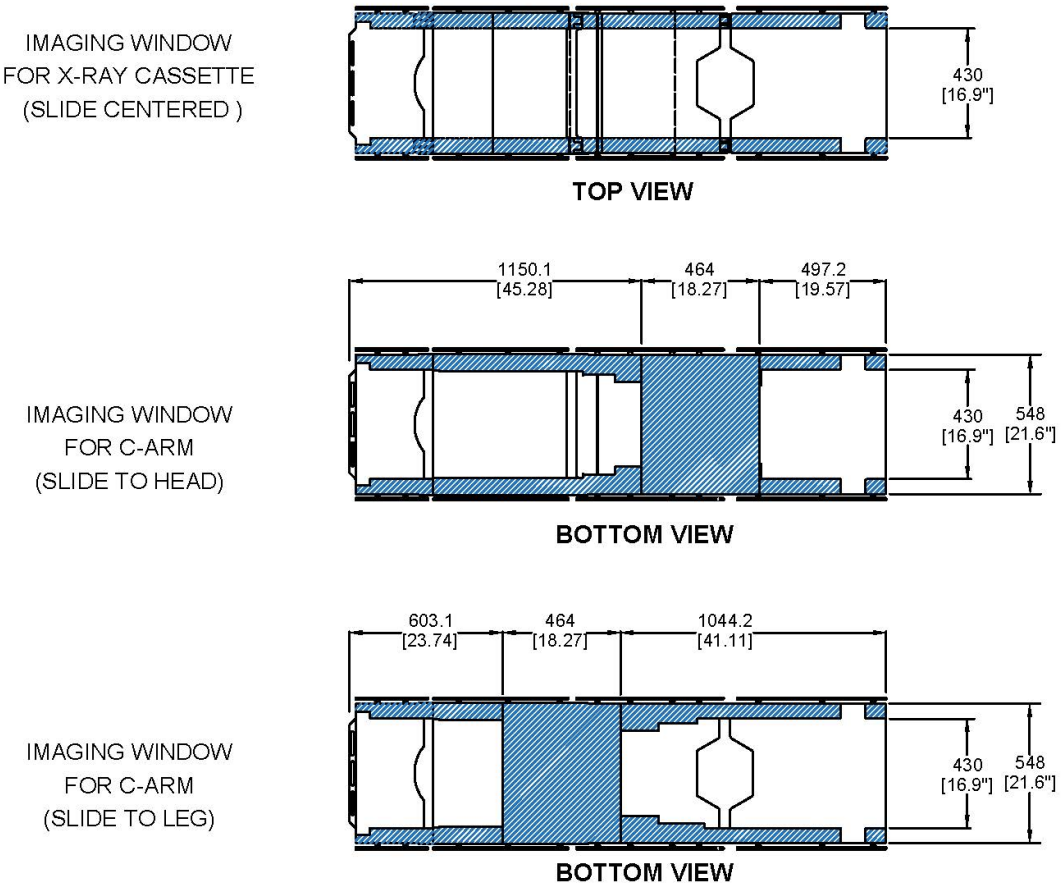

Figure 3-4. Image Amplification Coverage

NOTE: Standard Head and Leg Sections are shown.

Range of Motion

Height: 22 to 44.7" (559 to 1136 mm)

Trendelenburg Range: 0 - 45°

Reverse Trendelenburg Range: 0 - 45°

Lateral Tilt Range: ± 25°

Slide Motion: 10.8" (273.5 mm) to Head, 10.8" (273.5 mm) to Foot

Back Section Motion: UP: 90°; DOWN: 50°

Leg Motion: UP: 80°; DOWN: 105°

Kidney Elevator Mechanism: Level - 3.3" (83.8 mm), Flex - 3.9" (98 mm)

Flex/Reflex: 90° / 130°

Head Motion (Manual): Up/Down: 90°

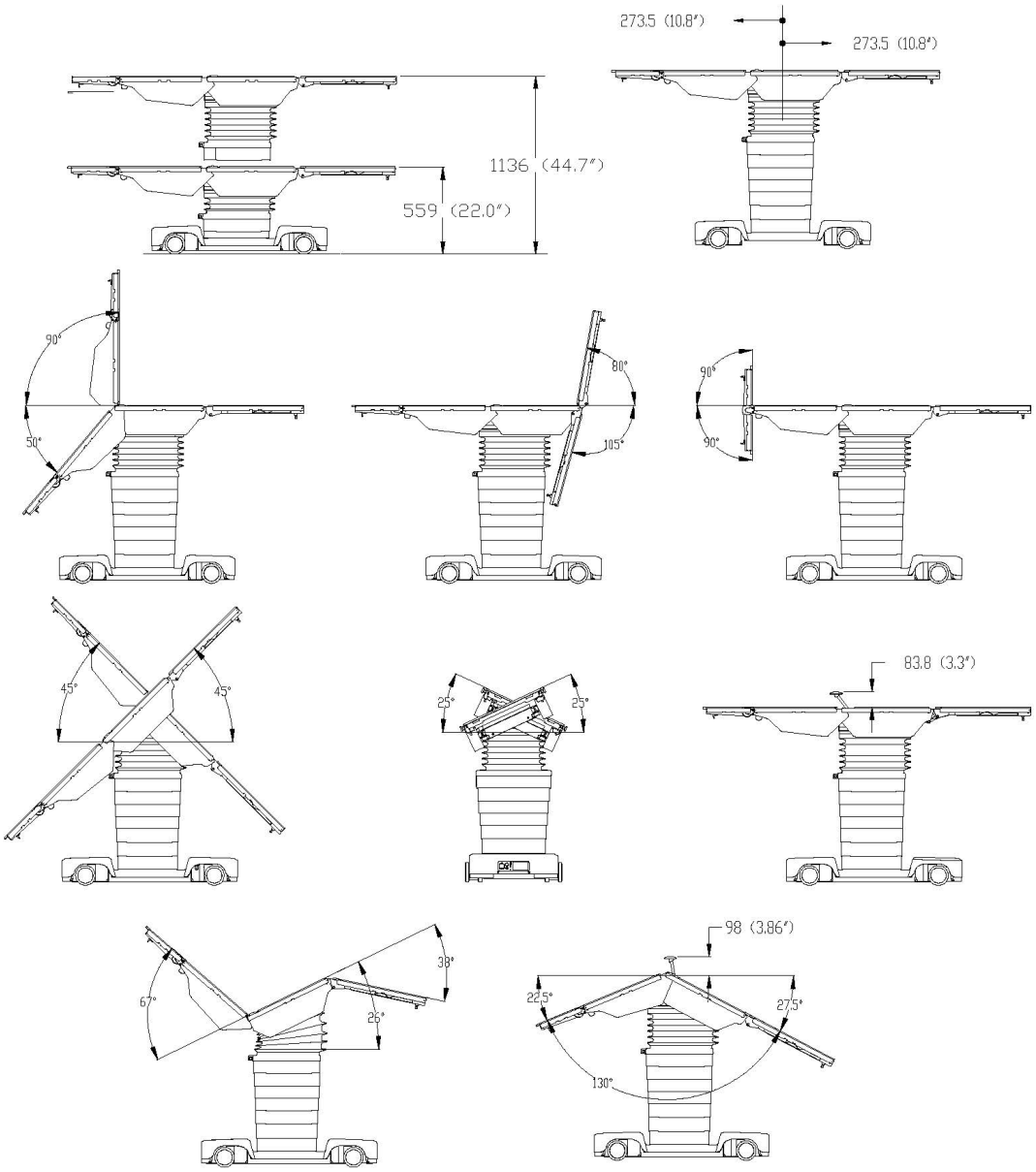

Figure 3-5. Table Articulation

Transport

Transport Position: Level and Center Tabletop with a Table Height lower than 30" (762 mm).

EMC/High-Frequency Interference

WARNING

PERSONAL INJURY AND/OR EQUIPMENT DAMAGE HAZARD

Use of accessories, transducers, and cables other than those specified or provided by the manufacturer of this equipment could result in increased electromagnetic emissions or decreased electromagnetic immunity of this equipment and result in improper operation.

WARNING

PERSONAL INJURY HAZARD

Appropriate components of this Surgical Table have been tested and found in compliance with IEC 60601-2–46, 3rd Edition, Medical Electrical Equipment - Part 2–46: Particular requirements for the basic safety and essential performance of operating tables. There is, however, a potential that high frequency surgical equipment, cardiac defibrillators or cardiac defibrillator-monitors could interfere with this equipment and cause unanticipated table movement producing possible patient and/or staff injury. Should user experience interference, relocate this device or minimize the use of the interfering equipment while this device is in operation.

CAUTION

POSSIBLE EQUIPMENT DAMAGE

- Portable RF communications equipment (including peripherals such as antenna cables and external antennas) should be used no closer than 30 cm (12 inches) to any part of the STERIS 7000-Series General Surgical Table. Otherwise, degradation of the performance of this equipment could result.
- This device has not been tested for compatibility with all other potential RF Emitters such as X-ray, Metal Detectors, Electrosurgical Equipment, Diathermy Equipment, 5G Cellular, NFC, WPT, or Electronic Article Surveillance (EAS) devices. Caution should be used if such emitters are present within the use environment.
- A risk of increased or decreased emissions immunity may result if any additional cables are attached.
- The electromagnetic emissions characteristics of this equipment make it suitable for use in industrial areas and hospitals (CISPR 11 Class A).

Note the following:

- Medical Electrical Equipment needs special precautions regarding EMC and needs installed and put into service according to the EMC information provided in this manual.
- Portable and mobile RF communications equipment can affect Medical Electrical Equipment.
- The use of accessories, transducers and cables other than those specified by the manufacturer, may result in increased emissions or decreased immunity of this Surgical Table.
- This Surgical Table should not be used adjacent to other equipment. If so, table should be observed to verify normal operation.

- Medical Electrical Equipment needs special precautions regarding high frequency interference. Equipment needs installed and put into service according to facility regulations and procedures.
- Potential hazards from the interfering high-frequency device could be patient burns and/or electrical shock of patient and operator.
- Potential explosion hazards caused by the interfering high-frequency device because this surgical table is not suitable for use in the presence of a flammable anesthetic mixture with air or oxygen or nitrous oxide.
- Surgical Table not intended for use in an oxygen-rich environment.
- Suitable for intermittent operation 3 min ON/27 min OFF. For loads over 700 lb., Height motion duty cycle is limited to 1 minute 15 seconds ON / 58 minutes 45 seconds OFF.
- For X-ray attenuation, the aluminum equivalence for the tabletop is 2.3 millimeters.

3.4 Tabletop Articulation and Patient Positioning

IMPORTANT: *A listing of the Safety Precautions to be observed when operating and servicing this Surgical Table can be found in* ***Safety Precautions and Pinch Points*** *of this manual. Do not operate or service the equipment until you have been trained on and understand this information.*

This section includes the following:

Tabletop Articulation and Weight Limitation

Positioning Patient on Table

Patient Safety Straps

Table Repositioning With Patient Aboard (Not Transport)

Tabletop Articulation and Weight Limitation

WARNING

TIPPING HAZARD

⚠ Engage floor locks and center tabletop over column before loading, placing, or transferring patient on or off of Surgical Table.

Do not use this Surgical Table for patients exceeding the maximum patient weight of the following Table positions:

- 1200 lb (544 kg) Load, Normal Patient Orientation; raise or lower only (no tabletop articulation or slide).

⚠
- 1000 lb (454 kg) Load, Normal and Reverse Patient Orientation; raise or lower; includes all tabletop articulation except tabletop slide.
- 700 lb (318 kg) Load, Normal and Reverse Patient Orientation; raise or lower; includes all tabletop articulation and full tabletop slide.

⚠ Center tabletop over column before applying chest compressions.

WARNING

PERSONAL INJURY HAZARD

This Surgical Table is not to be used to transport patients. With exception of slight repositioning, as detailed in the operating instructions, never disengage floor locks when patient is on table. Failure to heed this warning can result in injury to both the patient and the operating room staff.

Healthcare professionals must ensure patients are positioned and monitored so as to prevent compromising respiration, nerve pathways or circulation issues.

Do not exceed 600 lb (272 kg) on the leg section.

Center tabletop over column before applying chest compressions.

WARNING

PERSONAL INJURY AND/OR EQUIPMENT DAMAGE HAZARD

The headrest rail supports 50 ft-lb (67 Nm) maximum. Exceeding these limits could result in injury or equipment damage.

NOTE: Accessories shall be marked if limitation exists that reduce functionality of the Surgical Table. Do not exceed the lowest weight limit, table or accessory.

Do not exceed the maximum patient weights or engage pinch points as specified in the Safety Precautions and Pinch Points section.

Positioning Patient on Table

1. Always check patient stability when patient is positioned.
2. Do not place patient on this Surgical Table unless floor locks are engaged.
3. Use extreme care when transferring patients to or from table.
4. Ensure all Table accessories are properly installed and secured.
5. Check for and eliminate harmful patient pressure points once patient is positioned.
6. Have a qualified medical professional monitor patient during surgery for all possible tabletop articulation hazards.
7. Do not exceed 600 lb (272 kg) on the Leg Section. Leg Section is not designed to support full body weight.
8. The headrest rail supports 50 ft-lb (67 Nm) maximum. Exceeding these limits could result in injury or equipment damage.

IMPORTANT: *All patients must be restrained for proper safety regardless of the length or type of procedure.*

NOTE: STERIS recommends only using STERIS manufactured or distributed accessories with this table. Use of accessories not manufactured or approved by STERIS may not be compatible with this table and could result in injuries to patient/user or equipment damage.

Patient Safety Straps

WARNING

PERSONAL INJURY HAZARD

Failure to keep the patient properly secured with the patient safety straps at all times could result in patient death or serious injury.

Adjust the patient safety straps such that they restrain the patient according to currently accepted patient restraining practices, keeping in mind the Trendelenburg/Reverse Trendelenburg, back, lateral tilt, and height adjustment.

Table Repositioning With Patient Aboard (Not Transport)

If this Surgical Table needs to be repositioned within the operating room with the patient aboard, utilize the following procedure:

1. Ensure patient is properly secured.
2. Center and level tabletop with patient over column.
3. Lower tabletop to lowest possible height.
4. Ensure Table path is clear of obstructions.
5. One person must be at each end of tabletop.
6. Release floor locks.
7. If the Table is moved with the patient aboard, apply only lateral force to reposition Table.
8. DO NOT push down on or lift tabletop while repositioning Table.
9. Once Table is repositioned, lock Table by engaging all floor locks.

Before Using The Table

4.1 Introduction

IMPORTANT: *A listing of the Safety Precautions to be observed when operating and servicing this equipment can be found in* ***SAFETY PRECAUTIONS*** *Section of this manual. Do not operate or service the equipment until familiar with this information. Read this entire manual before attempting to install or operate your Surgical Table. Ensure all appropriate personnel understand the contents of this manual.*

An equipment drawing, showing all utility and space requirements, was supplied when this Surgical Table was ordered. The clearance space specified on the equipment drawing is necessary for proper operation of Unit. Uncrating and Installation Instructions (refer to **ASSOCIATED PUBLICATIONS** Section of this manual for document number) were furnished with the table. If documents are missing or misplaced, contact STERIS, giving the serial, equipment, and model numbers of the table. Replacement copies are sent promptly.

NOTE: Table is not suitable for use in the presence of a flammable anesthetic mixture with air or oxygen or nitrous oxide. Refer to **GLOSSARY** Section of this manual for a listing of **TERMS, DEFINITIONS, AND SYMBOLS** that may appear in this manual or on your equipment.

4.2 Installation

This section includes the following:

Introduction

Grounding

Positioning the Table

Installing Battery Fuse

Connecting Table to Facility Power

Connecting Hand Control

Connecting Optional Foot Control

Installing/Removing Table Pads

Accessories/Side Rails

Introduction

WARNING

PERSONAL INJURY AND/OR EQUIPMENT DAMAGE HAZARD

⚠ Repairs and adjustments to this equipment must be made only by STERIS or STERIS-trained service personnel. Maintenance performed by unqualified personnel or installation of unauthorized parts could cause patient injury, personal injury, result in improper equipment performance, invalidate the warranty, or result in costly damage. Contact STERIS regarding service options.

Check the overall condition of the Surgical Table and all applicable accessories/options upon receipt to ensure nothing was damaged during shipment. If damage appears to have occurred, contact the shipping company and STERIS.

STERIS recommends that only STERIS-trained or STERIS-supervised personnel attempt to uncrate/crate, install and perform maintenance on the Surgical Table. Uncrating, crating, installation, or maintenance by others may result in personal injury or damage to the product.

Grounding

A patient grounding post/potential equalization terminal (male connector, DIN 42801) is provided on Mains Power Panel. The mating female connector for patient grounding **is not furnished by STERIS**.

Positioning the Table

WARNING

PERSONAL INJURY HAZARD



If an antistatic path is necessary, STERIS recommends the use of antistatic pads (specifically developed for this table) in direct contact with the patient. Table must also be positioned on antistatic floor or connected to equalization device (equipotential connector).

Position Surgical Table at desired location, ensuring that the Facility electrical outlet is marked for the applicable power system in the range of 100-240 Vac. See *Connecting Table to Facility Power*.

Note that the provided power cord is approximately 18 ft (5.5 m) long.

NOTE: For cord connected Surgical Tables, the power cord attachment plug is to be used as a disconnect from Facility power. The Surgical Table must be positioned so plug is not difficult to reach.

Installing Battery Fuse

If not installed, install 30A battery fuse into Surgical Table base as follows (see *Figure 4-1*):

1. Locate correct battery fuse.
2. Turn Surgical Table OFF.
3. Disconnect ac power cord from Facility power.
4. At head-end of table base (beside ac input), use a screw driver to unscrew and remove fuse cap.
5. Remove blown fuse(s) and replace.
6. Return fuse cap to table base and tighten using screw driver.

   NOTE: If the Table remains in extended storage for longer than three months; charge batteries every three months.



Figure 4-1. Installing or Replacing Battery Fuse

7. Reconnect ac power cord to Facility power.
8. Turn table ON using Hand Control or Backup Control Panel.
9. Verify Hand Control displays table is operating on ac power.
10. Ensure table functions properly.

Connecting Table to Facility Power

WARNING

ELECTRIC SHOCK HAZARD

⚠ To avoid the risk of electric shock, this equipment must only be connected to a supply mains with protective earth.

CAUTION

POSSIBLE EQUIPMENT DAMAGE

⚠ If the Surgical Table is not plugged in, protect the ac receptacle from liquid during cleaning and use. After cleaning and use, visually inspect for moisture in the ac receptacle before reconnecting power cord. Ensure cord and receptacle are completely dry before connecting to Facility power.

Required line power for Surgical Table is 100-240 Vac, single-phase, 50/60 Hz, 10 – 4 Amp.



Figure 4-2. Connecting Table to Facility Power (Typical)

WARNING

TRIPPING HAZARD

⚠ Route the power cord to the receptacle to minimize being tripped over by personnel in the area.

---

1. Route power cord to prevent tripping hazard.
2. Plug power cord into appropriate socket on table base (see *Figure 4-2*).
3. Plug power cord into appropriate facility outlet.

   NOTE: When integrity of external protective earth conductor arrangement is in doubt, use battery power only.

NOTE: A green battery symbol on the LCD Indication Panel indicates the batteries are charging. Refer to *Section 7.7, Battery Charging*.

Connecting Hand Control



Figure 4-3. Connecting Hand Control

For the following steps, refer to *Figure 4-3* as needed.

1. Remove Hand Control from packaging.
2. Align red mark (or arrow) on hand control plug with red mark on connection socket.
3. Push hand control plug into Table socket until a "click" is heard.
4. With Table at precise location, use **Floor Lock** button (on Hand Control) to lock table in place. (If needed, refer to *Section 2.2, Table Control Symbols*).
5. Place hand control on Table accessory/side rail.

Connecting Optional Foot Control

The optional foot control allows operator to control Table HEIGHT, TREND and TILT movements.

Install the option as follows, referring to*Figure 4-4* as needed.

1. Remove foot control from package.
2. Lift hinged plastic protective cover for foot control connection socket.
3. Align red mark (or arrow) on foot control plug with red mark on associated connection socket.
4. Push foot control plug into table socket until a "click" is heard.
5. Place foot control in desired location. Be aware of tripping hazard that may be caused.



Figure 4-4. Connecting Optional Foot Control

Installing/Removing Table Pads

Conductive Tabletop Pads (see *Figure 4-5*) are one of two varieties (related to tabletop attachment):

- Pads backed with hook-and-loop fastener strips, which mate to hook-and-loop strips on the tabletop.
- Pads with mushroom-type fasteners (non hook-and-loop)

NOTE: Tabletop Pads are nonsterile. They need to be cleaned prior to and following each use.

To install a table pad, place pad in position and firmly press associated fasteners together.

To remove a table pad, gently peel or lift the pad, as applicable, to free it from the tabletop.

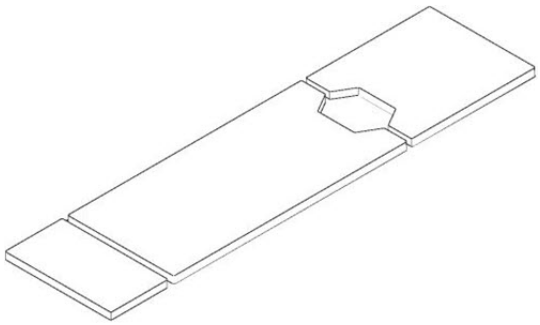

Figure 4-5. Tabletop Pads (Typical)

Accessories/Side Rails

The standard STERIS permanently attached 3/8" wide x 1-1/8" tall (9.5 x 28.6 mm) side rails allow for the use of many standard surgery table attachments and accessories. The rails consist of one rail mounted to each side of each tabletop section.

For complete information on accessory options, consult STERIS.

WARNING

PERSONAL INJURY AND/OR EQUIPMENT DAMAGE HAZARD

The headrest rail supports 50 ft-lb (67 Nm) maximum. Exceeding these limits could result in injury or equipment damage.

WARNING

PERSONAL INJURY HAZARD

When installing any Table Accessory, check for correct attachment and tighten securely (if appropriate). Do not use worn, damaged, or malfunctioning accessory. Check for proper installation before using any accessory.

WARNING

INSTABILITY HAZARD

Possible patient or user injury, as well as Surgical Table or accessory failure, may result from using STERIS table accessories for other than their stated purpose - or from using accessories manufactured and sold by other companies for use on STERIS surgical tables.

Table 4-1. Surgical Table Specific Accessories*

Accessory	Equipment Number
Foot Control	BF586
Hand Control: With Cable Without Cable Cable Only	 BF349 BF00306 BF00313
TLT Table Pads (Hook-and-Loop): Complete TLT Pad Set (with Leg Section with Cutout) Complete TLT Pad Set (with Leg Section without Cutout) Headrest Torso (Back/Seat) — with Cutout Torso (Back/Seat) Leg Section (with Cutout) Leg Section (without Cutout)	 BF00290 (2") BF00291 (3") BF00292 (4") BF00296 (2") BF00297 (3") BF00298 (4") BF00207 (2”) BF00208 (3”) BF00209 (4”) BF00284 (2”) BF00285 (3”) BF00286 (4”) BF00303 (2”) BF00304 (3”) BF00305 (4”) BF00219 (2”) BF00225 (3”) BF00231 (4”) BF00220 (2”) BF00226 (3”) BF00232 (4”)
PRS Table Pads (Mushroom-Cap): Complete PRS Pad Set (with Leg Section with Cutout) Complete PRS Pad Set (with Leg Section without Cutout) Headrest Torso (Back/Seat) – with Cutout Leg Section (With Cutout) Leg Section (Without Cutout)	 BF00293 (2") BF00294 (3") BF00295 (4") BF00299 (2") BF00301 (3") BF00302 (4") BF00210 (2”) BF00211 (3”) BF00212 (4”) BF00287 (2") BF00288 (3") BF00289 (4") BF00221 (2”) BF00227 (3”) BF00233 (4”) BF00222 (2”) BF00228 (3”) BF00234 (4”)
* Contact STERIS for ordering information.	

4.3 Hand Control

This Section contains the following:

Introduction

Hand Control Operation

Introduction

IMPORTANT: *A listing of the Safety Precautions to be observed when operating and servicing this equipment can be found in* ***SAFETY PRECAUTIONS*** *Section of this manual. Do not operate or service the equipment until familiar with this information. Read this entire manual before attempting to install or operate your Surgical Table. Ensure all appropriate personnel understand the contents of this manual.*

The Hand Control provides a simple user interface to manipulate all Surgical Table articulations. Uses other than those described are not recommended and may not be safe.

NOTE: The Hand Control automatically goes into sleep mode upon non-use after 30 minutes if floor locks are released and 10 hours when floor locks are engaged. The Hand Control is reactivated by depressing **ANY** pushbutton or picking up the Hand Control.

The Hand Control (see *Figure 4-6*) is to be operated only by users who have been successfully trained on operation of this Surgical Table. Please contact STERIS for appropriate guidance, in-service, and training. If the Active Alert ICON appears in the Screen Indication Panel, refer to **TROUBLESHOOTING** Section.

NOTE: If needed, refer to **Table Control Symbols** section for symbol definitions.



Figure 4-6. Typical Hand Control

Hand Control Operation

Use the Hand Control as follows:

1. Connect Hand Control to Surgical Table.
2. Press and hold power pushbutton for 3 seconds to activate Table (see *Figure 4-6*).
3. Home Screen appears (see *Figure 4-7*).



Figure 4-7. Hand Control Home Screen

4. After Hand Control completely powers up, display changes to Default Screen showing text and animated table graphic representing state of Table (see *Figure 4-8*).

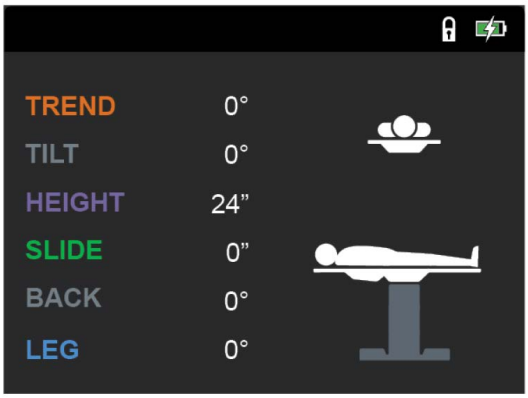

Figure 4-8. Hand Control Default Screen

NOTE: Text color matches Hand Control button color.

5. If Active Alerts are displayed on Indication Panel (see *Figure 4-9*), refer to **Troubleshooting** Section.

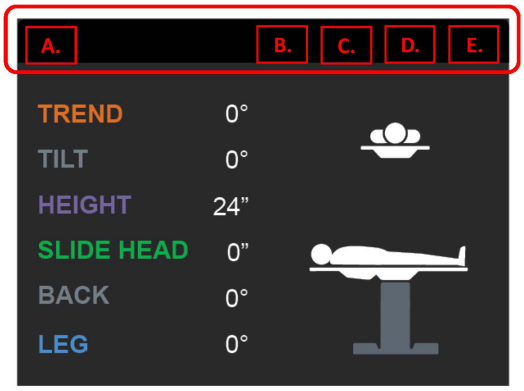

- A = Active Alerts location
- B = Backup Panel Active location
- C = Reverse Orientation Indicator location
- D = Lock Status location (always shown)
- E = Battery Status Indicator location (always shown)

Figure 4-9. Hand Control Operating Screen Indication Panel

6. When a pushbutton is pressed, a table articulation is commanded. Screen depicts approximate image of articulation (see *Figure 4-10*).

   NOTE: Simply release the Hand Control pushbutton when desired tabletop position has been reached; the Table automatically stops and locks in position.

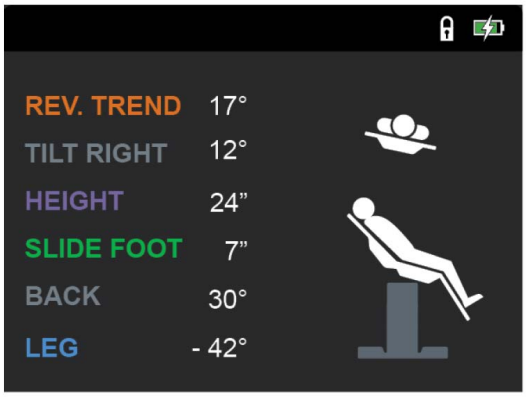

Figure 4-10. Typical Table Articulation Screen

NOTE: If a Hand Control fault prevents the Surgical Table from successfully powering down after holding the Power pushbutton for 3 seconds, perform a forced power down by holding the Power pushbutton for 10 seconds.

4.4 Foot Control Operation (Optional)

This Surgical Table can be operated using the optional foot control which allows operator to control HEIGHT, TREND, and TILT movements. It is important to note that when using the Hand Control and optional foot control at the same time, the **simultaneous inputs result in NO movement**. To operate the foot control:

1. Press and hold Power pushbutton (on either Hand Control or Backup Control Panel) for 3 seconds before using Foot Control.

NOTE: If the Hand Control is also attached, PEDAL ON appears on the Table Screen Indication Panel.

2. Operate HEIGHT, TREND, and TILT pedals as needed.

4.5 Backup Control System

This section contains the following:

Introduction

Backup Control Panel Operation

Backup Panel Description

Introduction

This Surgical Table is equipped with a Backup Control System which can be actuated at any time. This feature allows the Table to continue operating in the event of primary control malfunction. A Backup Control Panel is located on the Surgical Table column. The method of adjusting the head rest remains unchanged, as the head rest is always adjusted manually.

Backup Control Panel Operation

To operate Backup Control Panel, proceed as follows (see *Figure 4-11*):

1. Press and hold **PRESS FIRST** pushbutton to activate Backup Control Panel. Backup Control Panel Keypad pushbuttons illuminate when activated.
2. **LOCK** table before moving tabletop.
3. Backup Control Panel deactivates after 30 seconds of non-use.



Figure 4-11. Backup Control Panel

Backup Control Panel Description

The Backup Control Panel pushbuttons are the same as supplied on the Hand Control and defined in *Section 2.2, Table Control Symbols*.

NOTE: Simply release the Backup Control Panel pushbutton when desired tabletop position has been reached; the Table automatically stops and locks in position.

4.6 Installing/Removing Head Rest

This section includes the following:

Installing the Head Rest

Removing the Head Rest

Installing the Head Rest into Standard/Short Leg Section (Reverse Orientation)

Removing the Head Rest from Standard/Short Leg Section (Reverse Orientation)

Installing the Head Rest into Featherweight Leg Section (Reverse Orientation)
Removing the Head Rest from Featherweight Leg Section (Reverse Orientation)

WARNING

PERSONAL INJURY AND/OR EQUIPMENT DAMAGE HAZARD

⚠ The headrest rail supports 50 ft-lb (67 Nm) maximum. Exceeding these limits could result in injury or equipment damage.

WARNING

ELECTRIC SHOCK HAZARD

⚠ Operator must not simultaneously touch a patient and the section detection low voltage electrical contacts in the leg section receptacles or the head end of the back section.

Installing the Head Rest

Install the Head Rest (see *Figure 4-12*) as follows:

1. Insert both Head Rest installation rods into back section receptacles. Listen for "click" sound to indicate correct installation.
2. Pull Head Rest (both sides) to ensure correct installation.
3. Hand Control recognizes Head Rest has been attached.

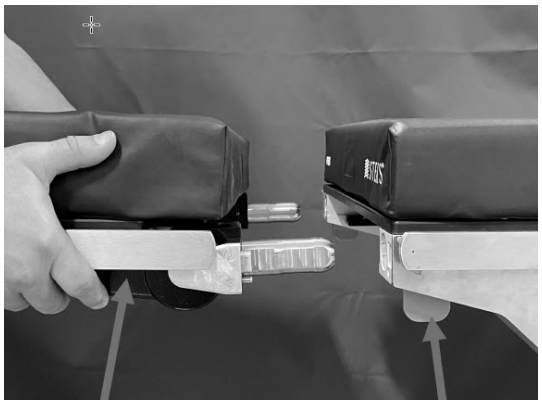

Figure 4-12. Installing the Head Rest

Removing the Head Rest

Remove the Head Rest (see *Figure 4-12*) as follows:

1. While holding Head Rest frame, squeeze both latching handles and simultaneously pull Head Rest away from back section receptacles.
2. Hand Control recognizes Head Rest has been removed.
3. Safely store Head Rest to prevent damage.

Installing the Head Rest into Standard/Short Leg Section (Reverse Orientation)

Install the Head Rest into Standard/Short Leg Section (see *Figure 4-13*) as follows:

1. Fully loosen both blue, locking thumbscrews located at bottom edge of leg section.
2. Insert both Head Rest installation rods into leg section receptacles until fully engaged.
3. Fully tighten both blue, locking thumbscrews to lock Head Rest in place.
4. Pull Head Rest (both sides) to ensure correct installation.



Figure 4-13. Installing the Head Rest into Standard/Short Leg Section

Removing the Head Rest from Standard/Short Leg Section (Reverse Orientation)

Remove the Head Rest from Standard/Short Leg Section (see *Figure 4-13*) as follows:

1. Fully loosen both blue, locking thumbscrews located at the bottom edge of the leg section.
2. Pull Head Rest free of the leg section.
3. Safely store Head Rest to prevent damage.

Installing the Head Rest into Featherweight Leg Section (Reverse Orientation)

Install the Head Rest into Featherweight Leg Section (see *Figure 4-14*) as follows:

1. Insert both Head Rest installation rods into Featherweight Leg Section receptacles. Listen for “click” sound to indicate correct installation.
2. Pull Head Rest (both sides) to ensure correct installation.

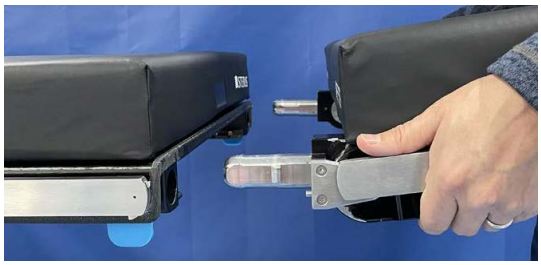

Figure 4-14. Installing the Head Rest into Featherweight Leg Section

Removing the Head Rest from Featherweight Leg Section (Reverse Orientation)

Remove the Head Rest from Featherweight Leg Section (see *Figure 4-14*) as follows:

1. While holding Head Rest frame, squeeze both blue latching handles (at bottom end of Featherweight Leg Section) and simultaneously pull Head Rest away from Featherweight Leg Section receptacles.
2. Safely store Head Rest to prevent damage.

4.7 Installing/Removing Leg Section

This section includes the following:

Introduction

Installing Leg Section

Removing Leg Section

Introduction

WARNING

PERSONAL INJURY HAZARD

Do not exceed 600 lb (272 kg) on the leg section.

WARNING

ELECTRIC SHOCK HAZARD

Operator must not simultaneously touch a patient and the section detection low voltage electrical contacts in the leg section receptacles or the head end of the back section.

Install or remove the Surgical Table leg section as follows.

Installing Leg Section

Install the Table leg section as follows:

1. Position tabletop seat section to level by pressing and holding **LEVEL** pushbutton on Hand Control until level (0°).

   NOTE: For Split Leg Section, position both Left and Right Leg.

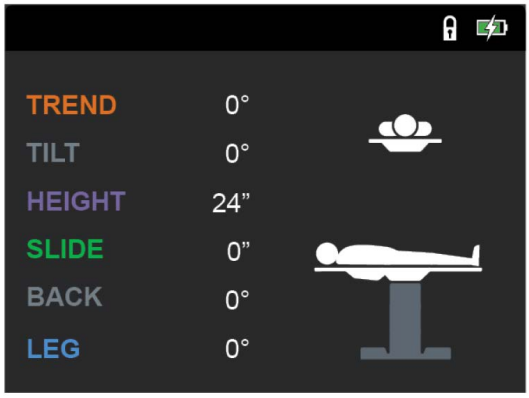

Figure 4-15. Hand Control, LCD Screen

2. With Table seat section level, insert both leg section posts into receptacles until fully engaged. Listen for "click" sound to indicate correct installation (see *Figure 4-16*).

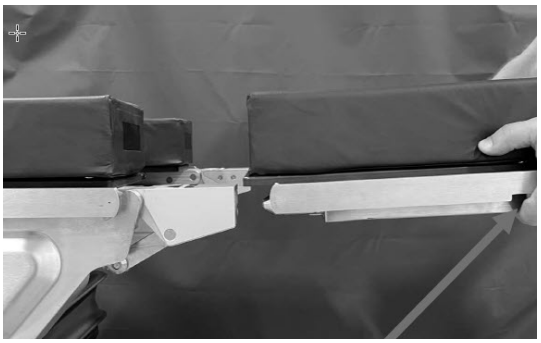

Figure 4-16. Attaching Leg Section

3. Pull leg section (both sides) to ensure correct installation. Leg section should remain firmly in place.
4. Hand Control recognize Leg section has been attached.

Removing Leg Section

The Surgical Table leg section is designed to be easily removed to enable procedures requiring optional leg supports. The leg section can be removed while a patient is on the Table. Remove the leg section as follows:

WARNING

PERSONAL INJURY HAZARD

- Do not remove table leg section if patient is not properly positioned. Patient's torso and buttocks must be firmly held in place by table back and seat sections and legs supported by leg supports.
- Do not exceed 600 lb (272 kg) on the leg section.

1. Using hand control, level leg section (bring to horizontal) by pressing **LEVEL** button on Hand Control (see *Figure 4-15*).
2. While holding leg frame, squeeze both handles and simultaneously pull backward (see *Figure 4-16*).
3. Hand Control recognizes Leg section has been removed.
4. Safely store leg section to prevent damage.

4.8 Reverse Patient Orientation

WARNING

PERSONAL INJURY AND/OR EQUIPMENT DAMAGE HAZARD

The headrest rail supports 50 ft-lb (67 Nm) maximum. Exceeding these limits could result in injury or equipment damage.

WARNING

PERSONAL INJURY HAZARD

Do not exceed 600 lb (272 kg) on the leg section.

Reverse Patient Orientation, Definition: The headrest is attached to the leg section and the patient oriented with head on headrest.

Some surgeries (for example, shoulder injuries) require the patient to be in reverse positioning and this Surgical Table to be operated in a reverse configuration. Press **Reverse Orientation** button on hand control and hold for two seconds, Green LED should light beside graphic representation of Reverse Orientation. Press **Reverse Orientation** button again and hold for two seconds to cancel Reverse Orientation function and green LED lights beside graphic representation of Normal Orientation.

When **Reverse Orientation** button is pressed, all other hand control commands (through the control system) note the new patient head position. Trendelenburg and Lateral Tilt movements and Back, Slide, and Leg Sections are automatically reversed.

IMPORTANT: *When using the* ***Reverse Orientation*** *button, note the following:*

1. *When Surgical Table is turned OFF, control system stores orientation status. Before any new positioning is attempted, ensure Table patient configuration using Hand Control.*
2. *Head rest is manually adjusted and is not affected by* ***Reverse Orientation*** *button operation.*
3. *Surgical Table cannot detect Headrest installed in Leg Section. System can not prevent collisions with floor or base when in this configuration. When operating Table while in head-in-leg configuration, pay close attention to any accessories for collision avoidance.*

Operating Instructions

5.1 Introduction

IMPORTANT: *A listing of the Safety Precautions to be observed when operating and servicing this equipment can be found in* ***SAFETY PRECAUTIONS*** *Section of this manual. Do not operate or service the equipment until familiar with this information. Read this entire manual before attempting to install or operate your Surgical Table. Ensure all appropriate personnel understand the contents of this manual.*

NOTE: Table is not suitable for use in the presence of a flammable anesthetic mixture with air, oxygen, or nitrous oxide. Refer to **GLOSSARY** Section of this manual for a listing of **TERMS, DEFINITIONS, AND SYMBOLS** that may appear in this manual or on your equipment.

Before operating this Surgical Table, verify the following:

1. Review Pinch Point content (refer to *Section 1.2, Warning — Pinching Hazard*).
2. Verify Surgical Table was installed/positioned properly *Section 4.2, Installation*.
3. If Head Rest and/or Leg Section are to be installed, verify they were according to *Section 4.6, Installing/Removing Head Rest*, and *Section 4.7, Installing/Removing Leg Section*.
4. Manually adjust Head Rest, if needed (see *Figure 5-1*), as follows:
    a. For Single Articulation Headrest:
        i. While holding head rest securely in one hand, pull release handle located under right side of head rest and tilt head rest to desired angle (level in this case).
        ii. Release handle to lock head rest at desired angle. Move headrest slightly until ratchet mechanism locks headrest in position.

        NOTE: An audible "CLICK" is heard when the headrest locks into position and the Hand Control notifies the User of the newly attached section.
    b. For Dual-Articulating Headrest:
        i. While holding Head Rest securely in one hand, pull spring-loaded release paddle (located under right side of Head Rest) and raise head board to desired angle.
        ii. Release paddle to lock Head Rest in place and Hand Control notifies User of newly attached section.

    NOTE: The release paddle releases both motions so the patients head weight must be supported whenever either tilt or height are adjusted.



Figure 5-1. Adjusting Dual-Articulating Head Rest

5. For optimum performance, before attempting to operate Surgical Table, **allow table to reach room temperature**.
6. Before placing patient on Table, ensure patient does not exceed maximum patient weight of following Table positions:
   - **1200 lb (544 kg)** Load, Normal Patient Orientation; raise or lower only (no tabletop articulation or slide).
   - **1000 lb (454 kg)** Load, Normal and Reverse Patient Orientation; raise or lower; includes all tabletop articulation except tabletop slide.
   - **700 lb (318 kg)** Load, Normal and Reverse Patient Orientation; raise or lower; includes all tabletop articulation and full tabletop slide.

     After verifying patient weight does not exceed table weight capacity, transfer or position patient and ensure patient is properly restrained. If needed, refer to the section on **Patient Safety Straps**.

NOTE: A patient grounding post/potential equalization terminal (male connector, DIN 42801) is provided on the Main Power Panel. The mating female connector for patient grounding is not furnished by STERIS.

5.2 Operating Surgical Table

This section includes the following:

Introduction

Floor Locks

Settings

Reverse Orientation

Level

Trendelenburg/Reverse Trendelenburg

Tilt Left/Right

Height Up/Down

Slide Head/Foot

Back Section Up/Down

Leg Section Up/Down

Split Leg Section Up/Down

Flex

Beach Chair

Kidney Section Up/Down

Flashlight

Introduction

This section of the Operator Manual is designed to follow the organization of the Hand Control buttons (see *Figure 5-2*). Refer to **Hand Control Operation** of Hand Control Section (*Section 4.3, Hand Control*) for more information.

NOTE: If needed, refer to **Table Control Symbols** section for symbol definitions. Also, screen text color matches Hand Control button color.



Figure 5-2. Typical Hand Control

Floor Locks

Operate the Floor Locks as follows:

1. To engage, press/hold **LOCK** button for 3 seconds.



The following typical screen is displayed:

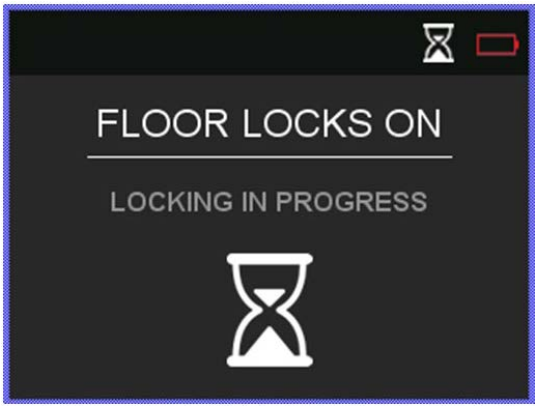

2. Once floor locks are fully engaged and Table is locked, the following screen displays:

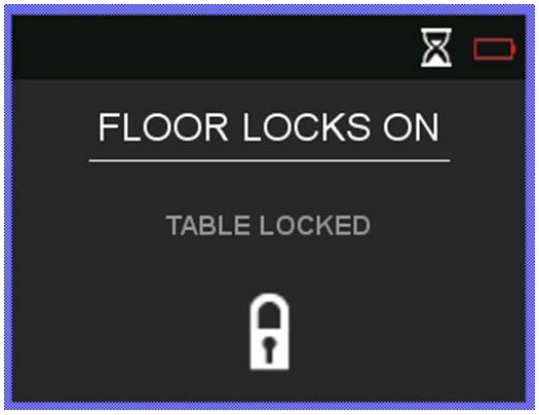

3. To disengage, press/hold **UNLOCK** button for three seconds.



Control asks for verification as following screen displays:

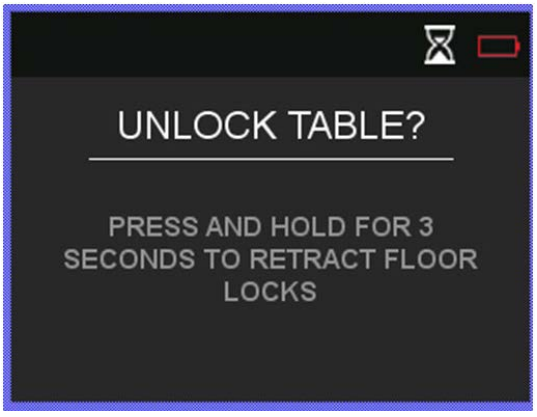

4. After holding button for three seconds, following screen appears:

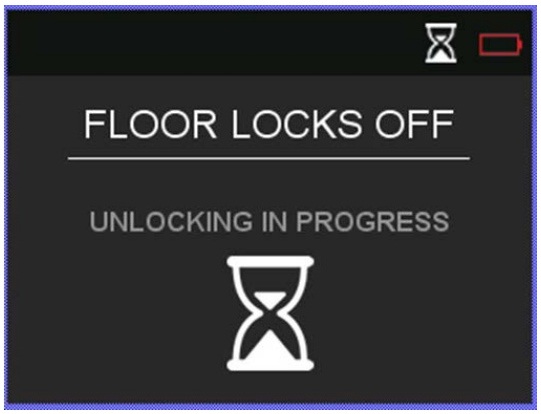

5. Once floor locks are fully disengaged and Table is unlocked, the following screen displays:

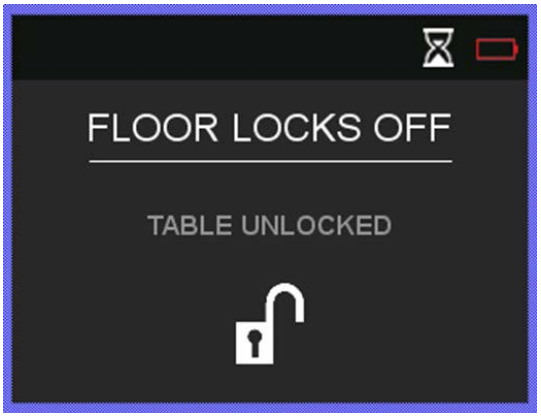

6. If floor locks fail to lock, following screen appears:

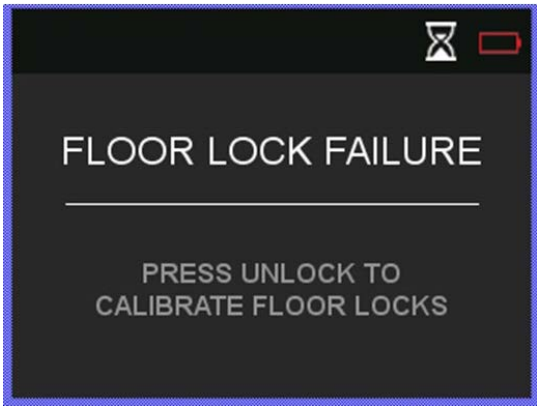

7. Press UNLOCK button to calibrate floor locks. Following screen displays:

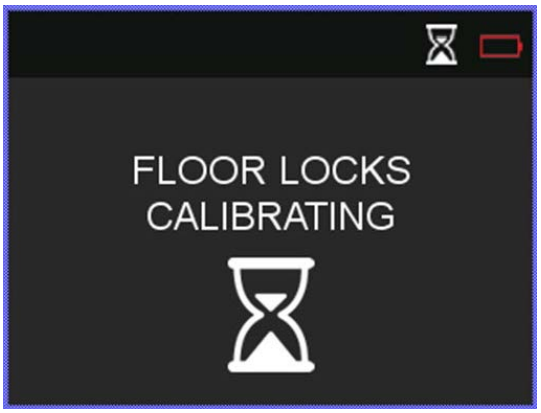

Settings

To change Hand Control settings, press/hold **SETTINGS** button for three seconds.



To change the Language and Units on the Hand Control, proceed as follows:

1. Modify Hand Control Units of Measurement as follows:
    a. Select Settings Menu button.
    b. Navigate Settings Menu to Units, and confirm selection.
    c. Choose preferred units of measurement to display on Hand Control.
    d. Confirm units of measurement selected on confirmation screen.
2. Modify Hand Control Language as follows:
    a. Select Settings Menu button.
    b. Navigate Settings Menu to Language, and confirm selection.
    c. Choose preferred Language of choice to display on Hand Control.
    d. Confirm Language of choice selected on confirmation screen.

Reverse Orientation

Reverse Patient Orientation, Definition: The headrest is attached to the leg section and the patient oriented with head on headrest.

When **REVERSE ORIENTATION** button is pressed, all other hand control commands (through the control system) note the new patient head position. Trendelenburg and Lateral Tilt movements and Back and Leg Sections are automatically reversed. For more information, refer to *Section 4.8, Reverse Patient Orientation*.

Position Surgical Table in reverse configuration as follows:.

1. Press **REVERSE ORIENTATION** button on Hand Control (see *Figure 5-2*).



The following typical screen is displayed:



2. Hold button for two seconds. Yellow LED should light beside graphic representation of Reverse Orientation and following screen appears:



3. Press **REVERSE ORIENTATION** button again and hold for two seconds to cancel Reverse Orientation function and green LED lights beside graphic representation of Normal Orientation and following screen displays:

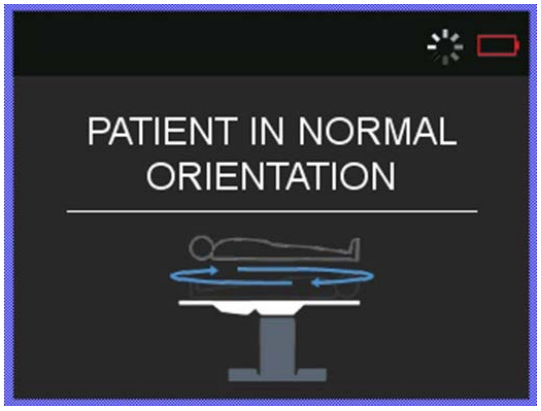

Level

Level Surgical Table tabletop as follows:

1. Press and hold **LEVEL** button on Hand Control.



Hand Control displays:

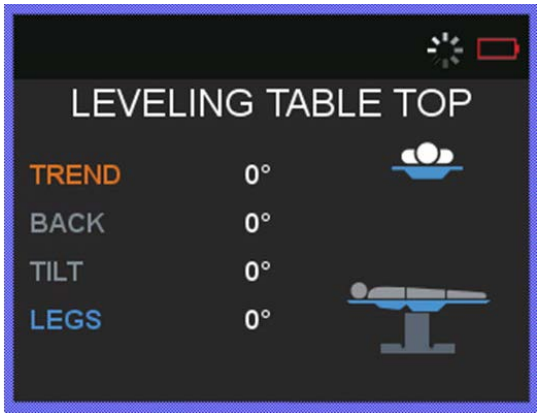

2. Displayed screen changes values as control levels Surgical Table sections. When complete, Hand Control displays:

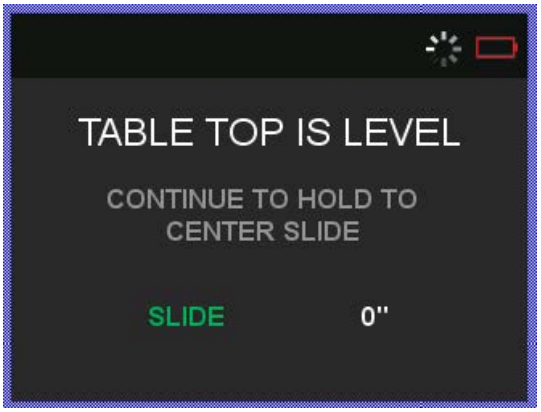

3. Continue holding **LEVEL** button as control centers tabletop slide.

Trendelenburg/Reverse Trendelenburg

Position Surgical Table tabletop in Trendelenburg or Reverse Trendelenburg as follows:

1. Press **TREND** or **REV TREND** button on Hand Control (see *Figure 5-2*).



Hand Control displays appropriate screen (see *Figure 5-3*).

2. Continue pressing button until desired angle is obtained.
3. Press **LEVEL** button to return tabletop to level (see *Level*) or use **TREND/REV TREND** buttons to return to level.

NOTE: Hand Control provides vibration feedback and messaging when motion limits have been met.

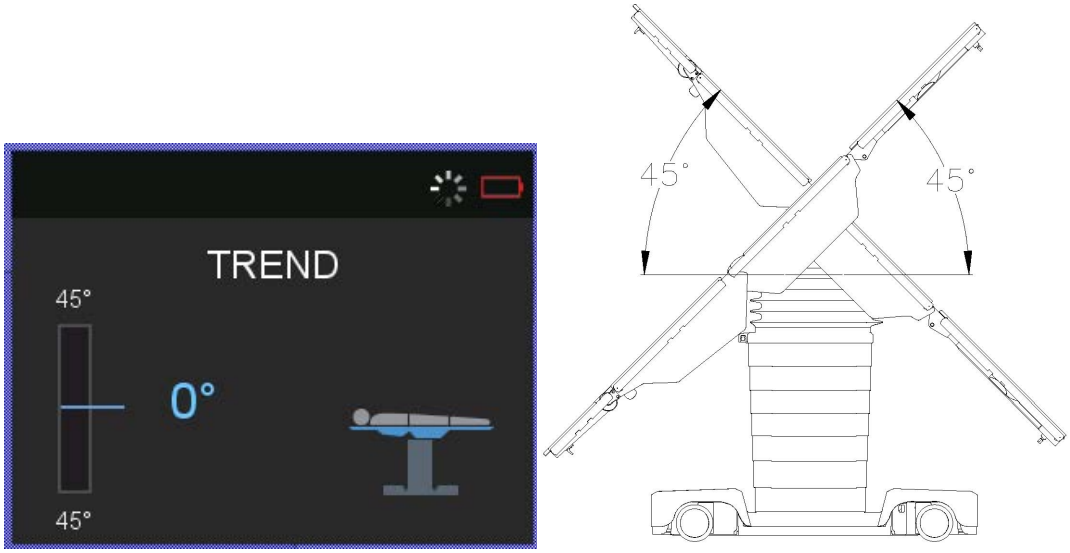

Figure 5-3. Trendelenburg Positioning (Typical)

Tilt Left/Right

Position Surgical Table tabletop in Left Tilt or Right Tilt as follows:

1. Press **LEFT TILT** or **RIGHT TILT** button on Hand Control (see *Figure 5-2*).



   Hand Control displays appropriate screen (see *Figure 5-4*).
2. Continue pressing button until desired angle is obtained.
3. Press **LEVEL** button to return tabletop to level (see *Level*) or use **LEFT TILT/RIGHT TILT** buttons to return to level.

   NOTE: Hand Control provides vibration feedback and messaging when motion limits have been met.

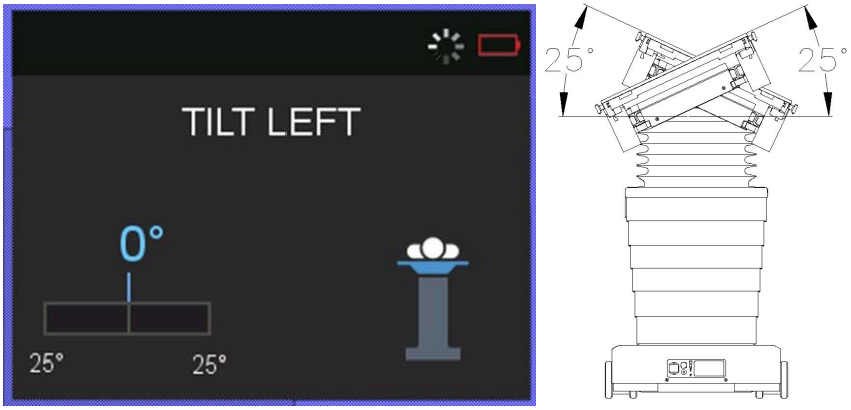

Figure 5-4. Tilt Positioning (Typical)

Height Up/Down

Position Surgical Table tabletop to desired height as follows:

1. Press **HEIGHT UP** or **HEIGHT DOWN** button on Hand Control (see *Figure 5-2*).



   Hand Control displays appropriate screen (see *Figure 5-5*).
2. Continue pressing button until desired height is obtained.
3. Press **LEVEL** button to return tabletop to Level (see *Level*).

   NOTE: Hand Control provides vibration feedback and messaging when motion limits have been met.

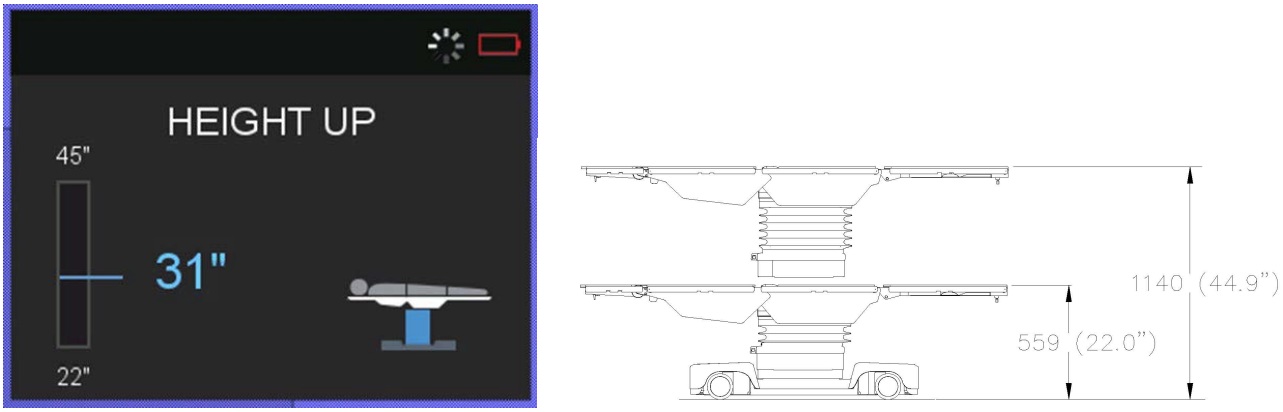

Figure 5-5. Height Positioning (Typical)

Slide Head/Foot

Position Surgical Table tabletop to desired slide distance as follows:

1. Press **SLIDE HEAD** or **SLIDE FOOT** button on Hand Control (see *Figure 5-2*).



   Hand Control displays appropriate screen (see *Figure 5-6*).
2. Continue pressing button until desired amount of slide is obtained.
3. Press **LEVEL, SLIDE HEAD,** or **SLIDE FOOT** button to return tabletop to level position (see *Level*).

   NOTE: Hand Control provides vibration feedback and messaging when motion limits have been met.

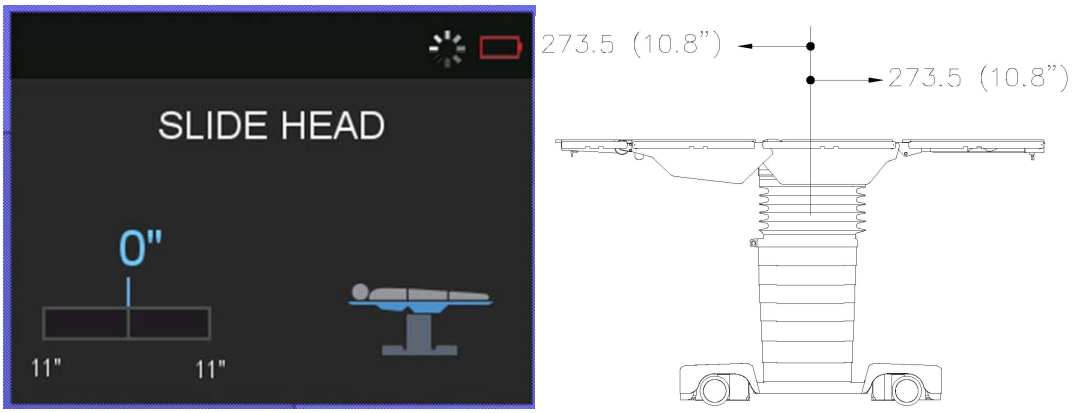

Figure 5-6. Tabletop Slide Positioning (Typical)

Back Section Up/Down

Position Surgical Table tabletop Back Section to desired up or down position as follows:

1. Press **BACK UP** or **BACK DOWN** button on Hand Control (see *Figure 5-2*).



   Hand Control displays appropriate screen (see *Figure 5-7*).
2. Continue pressing button until desired angle is obtained.
3. Press **LEVEL, BACK UP,** or **BACK DOWN** button to return tabletop to level position (see *Level*).

   NOTE: Hand Control provides vibration feedback and messaging when motion limits have been met.

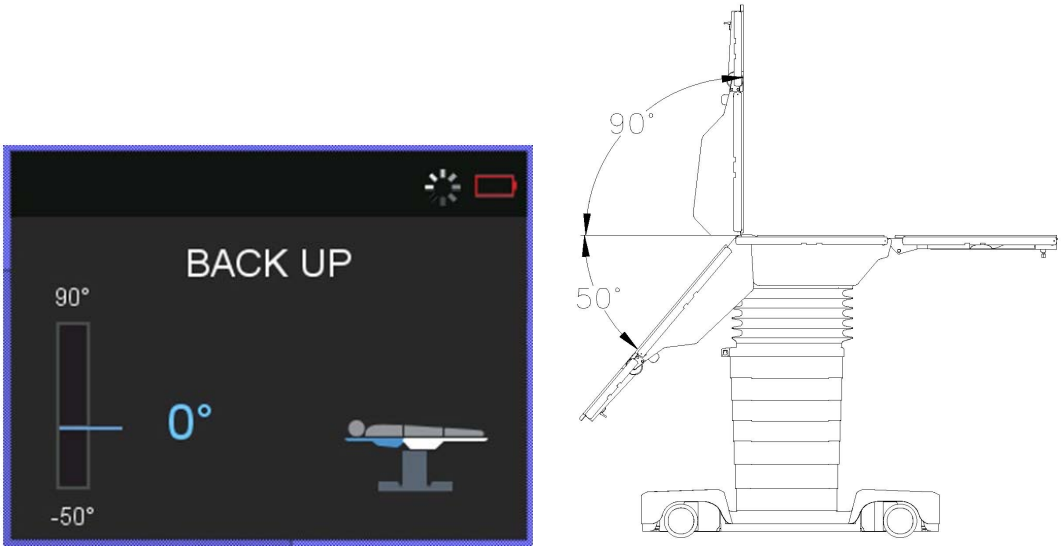

Figure 5-7. Tabletop Back Section Up/Down (Typical)

Leg Section Up/Down

Position Surgical Table tabletop Leg Section to desired up or down position as follows:

1. Press **LEG UP** or **LEG DOWN** button on Hand Control (see *Figure 5-2*).



   Hand Control displays appropriate screen (see *Figure 5-8*).
2. Continue pressing button until desired angle is obtained.
3. Press **LEVEL, LEG UP,** or **LEG DOWN** button to return tabletop to level position (see *Level*).

   NOTE: Hand Control provides vibration feedback and messaging when motion limits have been met.

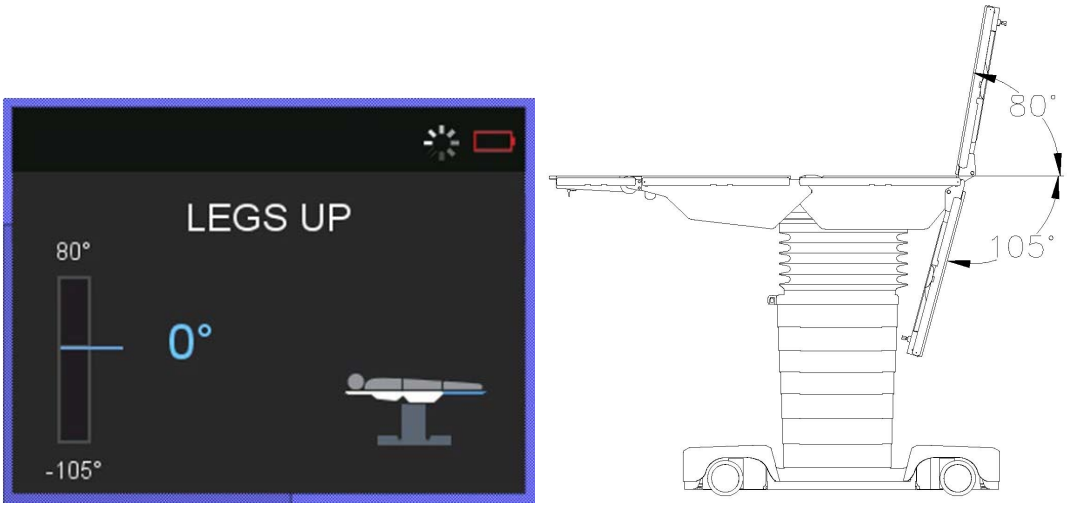

Figure 5-8. Tabletop Leg Section Up/Down (Typical)

Split Leg Section Up/Down

Position Surgical Table tabletop Split Leg Sections to desired up or down position as follows:

1. Press either **LEFT LEG** or **RIGHT LEG** button on Hand Control (see *Figure 5-2*). LED lights beside selection.





NOTE: If the selected Split Leg button (Left Leg or Right Leg) is pressed again, the LED goes out and now the Leg Up and Leg Down buttons control both tabletop legs.

2. Press **LEG UP** or **LEG DOWN** button on Hand Control.





Hand Control displays appropriate screen (see *Figure 5-9*).

3. Continue pressing button until desired angle is obtained.
4. Press **LEVEL, LEG UP,** or **LEG DOWN** button to return tabletop to level position (see *Level*).

   NOTE: When using the Level function, if either of the legs are still selected (Right or Left), both legs move to Level. To move both legs to Level at the same time, deselect the Split Leg function.

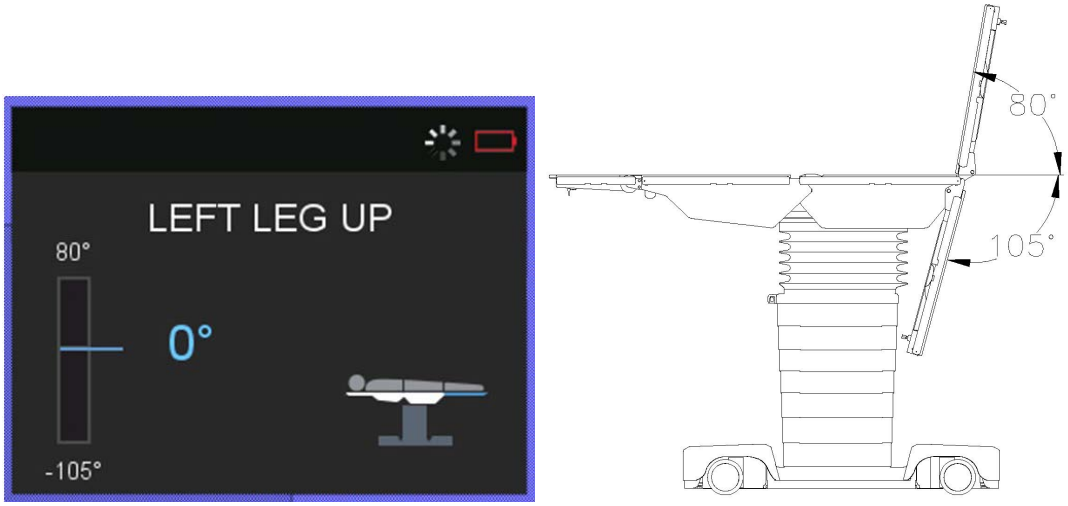

Figure 5-9. Tabletop Split Leg Section Up/Down (Typical)

NOTE: Hand Control provides vibration feedback and messaging when motion limits have been met.

Flex

Position Surgical Table tabletop in the Flex position as follows:

1. Press **Flex** button on Hand Control (see *Figure 5-2*).



   Hand Control displays appropriate screen (see *Figure 5-10*). Screen displays Trendelenburg and Back Sections movement.

2. Continue pressing button until desired degree of Flex is obtained.

   NOTE: User may manually adjust Trendelenburg or Back further (within tabletop limits) by pressing the appropriate function button.

3. Press **LEVEL** or a combination of **BACK UP** and **TREND** button to return tabletop to level position (see *Level*).

   NOTE: Hand Control provides vibration feedback and messaging when motion limits have been met.

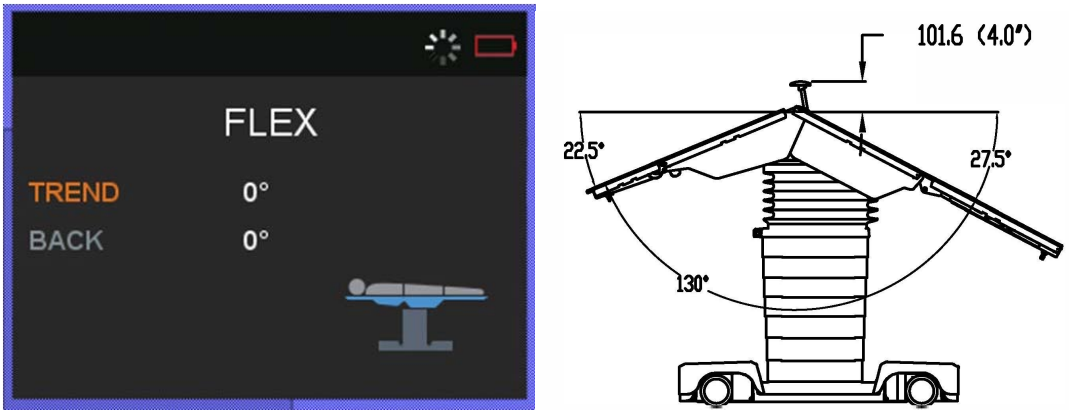

Figure 5-10. Tabletop Flex Positioning (Typical)

Beach Chair

Position Surgical Table tabletop in the Beach Chair position as follows:

1. Press **Beach Chair** button on Hand Control (see *Figure 5-2*).



   Hand Control displays appropriate screen (see*Figure 5-11*). Screen displays Trendelenburg, Back, and Leg Sections movement.

2. Continue pressing button until desired position is obtained.

   NOTE: User may manually adjust Trendelenburg, Back, and Leg further (within tabletop limits) by pressing the appropriate function button.

3. Press **LEVEL** or a combination of **LEG UP, BACK DOWN,** and **REV TREND** buttons to return tabletop to level position (see *Level*).

   NOTE: Hand Control provides vibration feedback and messaging when motion limits have been met.

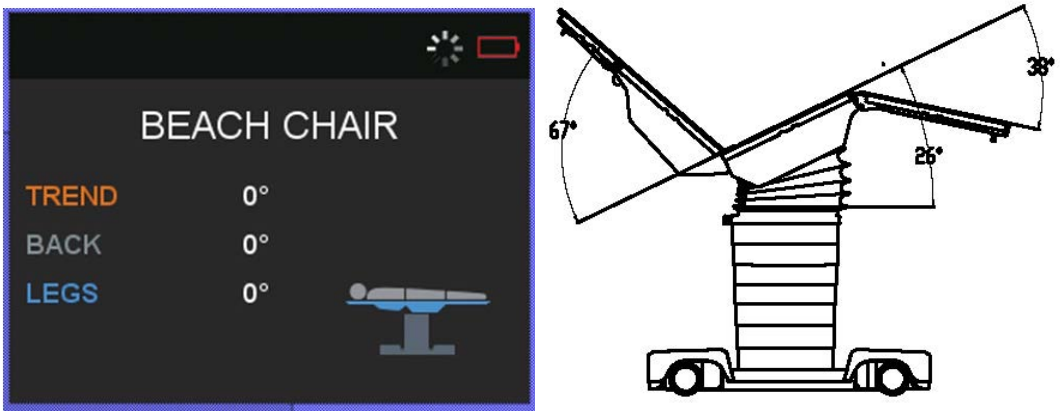

Figure 5-11. Tabletop Beach Chair Positioning (Typical)

Kidney Section Up/Down

Position Surgical Table tabletop Kidney Section to desired up or down position as follows:

1. Press **KIDNEY UP** or **KIDNEY DOWN** button on Hand Control (see *Figure 5-2*).

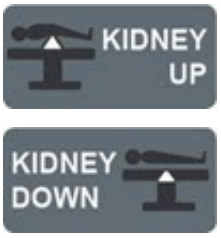

   Hand Control displays appropriate screen (see *Figure 5-12*).
2. Continue pressing button until desired position is obtained.
3. Press **LEVEL** or **KIDNEY DOWN** button to return tabletop to level position (see *Level*).

   NOTE: Hand Control provides vibration feedback and messaging when motion limits have been met.

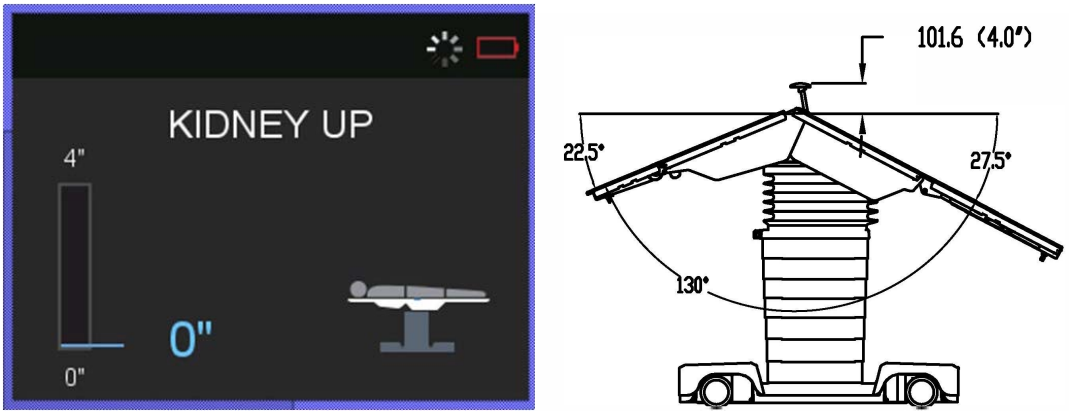

Figure 5-12. Tabletop Kidney Section Up/Down (Typical)

Flashlight

Control the Surgical Table Primary Hand Control Flashlight as follows:

1. Press **FLASHLIGHT** button on Hand Control (see *Figure 5-2*).



   Hand Control displays appropriate screen (see *Figure 5-13*).
2. Press **FLASHLIGHT** button to turn hand control flashlight OFF.



Figure 5-13. Hand Control Flashlight (Typical)

5.3 Tabletop Section Detection

WARNING

PINCHING AND TIPPING HAZARD

⚠ Patient injury may result if the operator of this Surgical Table is not completely familiar with the controls for tabletop articulation and table operation. All users should carefully review the Operator Manual before operating the table and be familiar with the operation before use on Patients.

WARNING

PERSONAL INJURY AND/OR EQUIPMENT DAMAGE HAZARD

⚠

- **Do not store items on Surgical Table base.** Doing so may result in equipment damage or inadvertent tabletop movement placing the patient and/or user at risk of injury.
- Failure to keep all personnel and equipment clear of the Surgical Table before actuating any inertia-driven or power-driven movement could result in table damage and/or personal injury.

WARNING

ELECTRIC SHOCK HAZARD

⚠ Operator must not simultaneously touch a patient and the section detection low voltage electrical contacts in the leg section receptacles or the head end of the back section.

IMPORTANT: *Table accessories not equipped with section detection capabilities are NOT monitored by the Collision Avoidance System nor recognized by the Hand Control. When operating the table, pay close attention to these accessories to avoid a collision.*

The STERIS 7000-Series Surgical Table control system can detect and report specific information about the tabletop section that has been installed into head or leg receptacles. The Section Detection information reported includes: tabletop section name, length and height information, and weight. When a tabletop section has been attached to either the head or leg receptacles, the Hand Control reports that a section has been attached and accurately reflects the added section on the table graphic. The Section Detection information is passed to the Collision Avoidance System to prevent tabletop collisions. When a tabletop section has been removed from the table, the Hand Control reports that a section has been removed and accurately reflects that the section has been removed from the table graphic.

5.4 Collision Avoidance System

WARNING

PINCHING AND TIPPING HAZARD

⚠ Patient injury may result if the operator of this Surgical Table is not completely familiar with the controls for tabletop articulation and table operation. All users should carefully review the Operator Manual before operating the table and be familiar with the operation before use on Patients.

WARNING

PERSONAL INJURY AND/OR EQUIPMENT DAMAGE HAZARD

⚠

- **Do not store items on Surgical Table base.** Doing so may result in equipment damage or inadvertent tabletop movement placing the patient and/or user at risk of injury.
- Failure to keep all personnel and equipment clear of the Surgical Table before actuating any inertia-driven or power-driven movement could result in table damage and/or personal injury.

IMPORTANT: *Table accessories not equipped with section detection capabilities are NOT monitored by the Collision Avoidance System nor recognized by the Hand Control. When operating the Table, pay close attention to these accessories to avoid a collision.*

The STERIS 7000-Series Surgical Table Collision Avoidance System is an anti-collision program that protects the powered tabletop sections from colliding with the table base, table column, or the ground (see following illustration). It provides instant user feedback on conflicting tabletop articulations and how to resolve the conflict. The Collision Avoidance System is based on section detection which provides information needed to determine a possible collision, such as: tabletop section name, length, and height information. The Collision Avoidance System stops Table motion within 4 centimeters of the possible collision.

IMPORTANT: *Note the following for the Collision Avoidance System:*

The Surgical Table does not include external proximity sensors and does not detect collisions with external objects or operators/patients.

The Surgical Table cannot detect a Headrest installed in the Leg Section. System can not prevent collisions with the floor or base when in this configuration. When operating the table while in head-in-leg configuration, pay close attention to any accessories for collision avoidance.

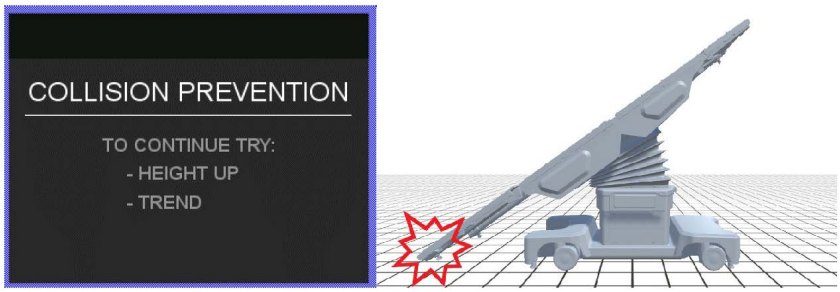

Troubleshooting

6.1 Introduction

WARNING

PERSONAL INJURY AND/OR EQUIPMENT DAMAGE HAZARD

⚠ Regularly scheduled preventive maintenance is required for safe and reliable operation of this equipment. Contact STERIS to schedule preventive maintenance.

⚠ Repairs and adjustments to this equipment must be made only by STERIS or STERIS-trained service personnel. Maintenance performed by unqualified personnel or installation of unauthorized parts could cause patient injury, personal injury, result in improper equipment performance, invalidate the warranty, or result in costly damage. Contact STERIS regarding service options.

NOTE: Never permit unqualified persons to service the Table.

This section describes the types of Surgical Table malfunctions most likely to occur, and probable causes and corrective actions. Use the included information to identify general problems and those indicated by the Hand Control Active Alerts Symbol.



Figure 6-1. Example of Active Alert Symbols on LCD Display Bar

For definition of the Alert, press the **Gear** icon on the Primary Hand Control to display the settings screen.



Once Settings Screen displays, the **Lock, Settings**, and **Unlock** Icons turn green. They now represent the items directly above them on the display. Press the **Down Arrow** button (**Unlock** Icon) to scroll down the list to wanted item (text turns green). In this case, **ALERTS.** Press the **Check Mark** Icon to selected the highlighted option.



Press the **Down Arrow** button to scroll down the list to wanted item (text turns green). In the preceding example, **579.** Press the **Check Mark** Icon to selected the highlighted option. In the following example, **Code 366, Motion Unavailable**, was selected.

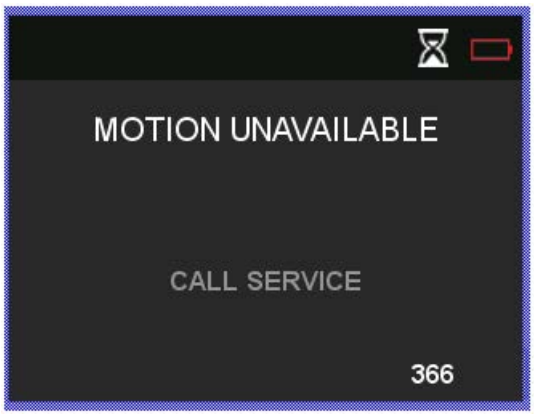

If unable to correct the problem with the use of the included sections, or a problem occurs not described, please contact STERIS to arrange for a trained service technician to promptly place the Surgical Table in proper working order.

Contacting STERIS: First, try to define the situation and determine whether it can be solved using the supplied information in this section. If situation can not be resolved, contact STERIS and give the following information for the table: serial number, model number, date of purchase. Press the **Gear** icon on the Primary Hand Control to display the settings screen.



Once Settings Screen displays, the **Lock, Settings,** and **Unlock** Icons turn green. They now represent the items directly above them on the display. Press the **Down Arrow** button (**Unlock** Icon) to scroll down the list to wanted item (text turns green). In this case, **HELP.** Press the **Check Mark** Icon to select the highlighted option.

6.2 Auxiliary Control Failure - Contact Service - ALM

Condition

Surgical Table Fallback Control not working.

General Troubleshooting	Additional Information
Communications error.	1. Contact STERIS.

6.3 Backup Control Failure - Contact Service - ALM

Condition

Surgical Table does not respond to Backup Control commands.

General Troubleshooting	Additional Information
Backup Control keypad not functioning.	1. Contact STERIS.

6.4 Backup Control Failure - Multiple Buttons Pressed - ALM

Condition

Surgical Table does not respond to Backup Control commands.

General Troubleshooting	Additional Information
Faulty Backup Control.	1. Contact STERIS.

6.5 Battery Failure - Call Service - ALM

Condition

Surgical Table does not function on battery power.

General Troubleshooting	Additional Information
Error in battery system function.	1. Check fuse. Replace as necessary. 2. Contact STERIS.

6.6 Calibration Required – Contact Service — nonALM

Condition

One or more actuators are not calibrated, and calibration is required.

General Troubleshooting	Additional Information
Actuator Error, PCB Replacement, or Encoder Position Error.	1. Contact STERIS.

6.7 Communication Failure - Replace Hand Control or Use Backup Keypad - ALM

Condition

Surgical Table does not respond to Hand Control commands when Table is receiving power.

General Troubleshooting	Additional Information
Faulty Hand Control.	1. Replace Hand Control with another proven to work from another Surgical Table. If Table responds to command, replace Hand Control. 2. Replace Hand Control Cord with another proven to work from another Surgical Table. If Table responds to command, replace Hand Control Cord. 3. Use Backup Keypad and contact STERIS.

6.8 Excess Rotational Table Movement When Pushed by Hand - nonALM

Condition

Surgical Table exhibits excess rotational movement when pushed by hand.

General Troubleshooting	Additional Information
Loose or worn component.	1. Contact STERIS.

6.9 Fault Log Warnings — ALM

Condition

Surgical Table firmware update failed.

General Troubleshooting	Additional Information
Failure to update application firmware during firmware update.	1. Restart Surgical Table. 2. Contact STERIS.

6.10 Floor Lock Failure - ALM

Condition

Surgical Table floor locks not operating as intended.

General Troubleshooting	Additional Information
Failure to process floor lock request or calibration of floor locks.	1. Power cycle Surgical Table. 2. Contact STERIS.

6.11 Foot Control Failure - Replace Control or Use HC/Backup Keypad - ALM

Condition

Surgical Table does not respond to Foot Control commands.

General Troubleshooting	Additional Information
Faulty Foot Control.	1. Replace Foot Control with another proven to work from another Surgical Table. If Table responds to command, replace Foot Control. 2. Use Hand Control or Backup Control Keypad and contact STERIS.

6.12 Hand Control Does Not Turn On — nonALM

Condition

Hand Control does not power ON.

General Troubleshooting	Additional Information
No power to Surgical Table.	1. Plug Surgical Table into power source. 2. Verify Table fuse is not blown. 3. Swap attached Hand Control with a known functioning Hand Control. 4. Contact STERIS.

6.13 Hand Control Failure – Replace Hand Control or Use Backup Control — ALM

Condition

Surgical Table Hand Control not operating.

General Troubleshooting	Additional Information
Failure to start up Surgical Table with attached Hand Control.	1. Power cycle Surgical Table. 2. Contact STERIS.

6.14 Memory Error - Contact Service - ALM

Condition

Surgical Table does not log activity.

General Troubleshooting	Additional Information
Hardware issue.	1. Contact STERIS.

6.15 Motion Stopped - Multiple Buttons Pressed - ALM

Condition

Desired Table motion stopped.

General Troubleshooting	Additional Information
User pressed more than one button at a time on Hand Control, Foot Control, or Backup Control Panel.	1. Release pressed buttons. 2. Choose desired motion and press appropriate button. 3. If condition persists, contact STERIS.

6.16 Motion Unavailable - Contact Service - ALM

Condition

Surgical Table does not respond to a motion command from the Hand Control, Foot Control, or Backup Control Panel.

General Troubleshooting	Additional Information
Software Failure.	1. Contact STERIS.

6.17 Noise or Vibration During Kidney Bridge Raise/Lower— nonALM

Condition

Surgical Table exhibits a noise or vibration during tabletop Kidney Section Raise/Lower operation.

General Troubleshooting	Additional Information
Obstruction is interfering with table operation.	1. Verify no obstruction is present. 2. Contact STERIS.

6.18 Noise or Vibration During Leg Section Raise/Lower — nonALM

Condition

Surgical Table exhibits a noise or vibration during tabletop Leg Section Raise/Lower operation.

General Troubleshooting	Additional Information
Obstruction is interfering with table operation.	1. Verify no obstruction is present. 2. Contact STERIS.

6.19 Noise or Vibration During Slide — nonALM

Condition

Surgical Table exhibits a noise or vibration during tabletop slide operation.

General Troubleshooting	Additional Information
Obstruction is interfering with table operation.	1. Verify no obstruction is present. 2. Contact STERIS.

6.20 Noise or Vibration During Trendelenburg/Reverse Trendelenburg — nonALM

Condition

Surgical Table exhibits a noise or vibration during tabletop Trendelenburg/Reverse Trendelenburg operation.

General Troubleshooting	Additional Information
Obstruction is interfering with table operation.	1. Verify no obstruction is present. 2. Contact STERIS.

6.21 Noise or Vibration When Raising/Lowering — nonALM

Condition

Surgical Table exhibits a noise or vibration when attempting to raise or lower.

General Troubleshooting	Additional Information
Obstruction is interfering with table operation.	1. Verify no obstruction is present. 2. Contact STERIS.

6.22 Section Detection Error - Remove and Reinstall Section - ALM

Condition

Surgical Table does not recognize attached section.

General Troubleshooting	Additional Information
Section installed improperly.	1. Remove and reinstall section. 2. If situation persists, contact STERIS.

6.23 Service Needed - Table Functional — ALM

Condition

A particular Surgical Table user selected motion is not available, but all other functions are.

General Troubleshooting	Additional Information
Software/Hardware Failure	1. Contact STERIS.

6.24 Table Cannot Complete Motion – Contact Service, If Fault Repeats - ALM

Condition

Surgical Table Motor Stalled/Over-Current.

General Troubleshooting	Additional Information
Excess loading on motion group.	1. Remove load from Surgical Table. 2. If fault persists, contact STERIS.

6.25 Table Failure - Contact Service - ALM

Condition

Surgical Table does not function.

General Troubleshooting	Additional Information
Surgical Table has encountered a communications failure.	1. Contact STERIS.

6.26 Table Failure - Power Off Then Back On - ALM

Condition

Surgical Table does not operate.

General Troubleshooting	Additional Information
Power or communication issue with the Surgical Table.	1. Cycle power on Surgical Table. 2. If situation persists, contact STERIS.

6.27 Table Overheating, Wait and Try Motion Again - ALM

Condition

Surgical Table Overheat detected.

General Troubleshooting	Additional Information
Surgical Table overloaded or actuator moving too frequently.	1. Pause and try motion again. 2. If situation persists, contact STERIS.

6.28 Update Required - Contact Service - ALM

Condition

Cannot operate Surgical Table using Hand Control. However, User can operate Table using Backup Control Panel.

General Troubleshooting	Additional Information
Outdated software.	1. Contact STERIS.

Routine Maintenance

7.1 Introduction

WARNING

PERSONAL INJURY AND/OR EQUIPMENT DAMAGE HAZARD



- Repairs and adjustments to this equipment must be made only by STERIS or STERIS-trained service personnel. Maintenance performed by unqualified personnel or installation of unauthorized parts could cause patient injury, personal injury, result in improper equipment performance, invalidate the warranty, or result in costly damage. Contact STERIS regarding service options.
- Regularly scheduled preventive maintenance is required for safe and reliable operation of this equipment. Contact STERIS to schedule preventive maintenance.
- Do not service or maintain equipment while in use.

The routine maintenance procedures described in this section of the manual should be performed regularly at the indicated intervals and as outlined in this section of the manual. Table usage may require more frequent maintenance than indicated. Any maintenance procedures not included in this section should be performed only by STERIS-trained service personnel fully acquainted with this Surgical Table.

The following preventive maintenance advisories must be observed:

1. Under no circumstances should this equipment be serviced without the Maintenance Manual. This (use of Maintenance Manual) also meets requirements for essential performance and compliance with electromagnetic compatibility.
2. The Maintenance Manual can be purchased by contacting STERIS Customer Service.
3. A detailed Preventive Maintenance schedule and replacement parts list can be found in the Maintenance Manual.
4. Preventive Maintenance is essential in keeping this equipment in optimal working condition. STERIS recommends establishing an annual maintenance agreement with STERIS service.
5. Maintain a record of all maintenance procedures performed on this Surgical Table.
6. If a problem occurs, refer to **TROUBLESHOOTING** Section, or contact STERIS.
7. Preventive Maintenance and regular service must be performed according to the Maintenance Manual to comply with the requirements for essential performance and compliance with electromagnetic compatibility.

NOTE: Never permit unqualified persons to service this equipment.

7.2 Routine Maintenance Schedule

This Section includes the following:

Daily/After Each Use

Weekly

Bi-Weekly

Monthly

Daily/After Each Use

IMPORTANT: *Prior to cleaning, ensure familiarity to all Safety Precautions and Pinch Points located in* ***SAFETY PRECAUTIONS*** *Section.*

Clean the following:

1. Gross Soils from Surgical Table (refer to *Section 7.3, Cleaning Surgical Table*).
2. Hand Control.
3. Tabletop and Pads.
4. Lower Surfaces, Yoke, Shrouds, and Base.

Weekly

IMPORTANT: *Prior to cleaning, ensure familiarity to all Safety Precautions and Pinch Points located in* ***SAFETY PRECAUTIONS*** *Section.*

Clean the following items:

1. All items presented in *Daily/After Each Use*.
2. Casters and Floor Locks.
3. Areas exposed by articulation.

Bi-Weekly

IMPORTANT: *Prior to cleaning, ensure familiarity to all Safety Precautions and Pinch Points located in SAFETY PRECAUTIONS Section.*

Perform the following procedures:

1. All items presented in *Daily/After Each Use*.
2. All items presented in *Weekly*.
3. Operate each Surgical Table function (refer to appropriate sections of *Section 3.3, Technical Specifications*). Operation should be smooth and quiet. If table operation is not smooth, have a qualified technician repair the table. Never permit inexperienced, unqualified persons to attempt to make any repairs to the table.

Monthly

IMPORTANT: *Prior to cleaning, ensure familiarity to all Safety Precautions and Pinch Points located in* ***SAFETY PRECAUTIONS*** *Section.*

Perform the following procedures:

1. All items presented in *Daily/After Each Use*.
2. All items presented in *Weekly*.
3. All items presented in *Bi-Weekly*.

7.3 Cleaning Surgical Table

This section includes the following:

Introduction

Disinfectants

Cleaning Materials
Prolonging Mattress and Pad Lives
Removing Gross Soils
Cleaning Tabletop and Pads
Cleaning Lower Surfaces
Cleaning Hand Control
Cleaning Casters and Floor Locks
Cleaning Areas Exposed by Articulation

Introduction

WARNING

INFECTION HAZARD

- To protect against aerosols being reflected from potentially contaminated surfaces, wear rubber or plastic gloves, masks and eye protection, and follow OSHA blood-borne pathogens standards when cleaning.
- When cleaning/disinfecting table, do not use alcohol which does not have sufficient cleaning/disinfection properties.

WARNING

PERSONAL INJURY HAZARD

When cleaning/disinfecting table, do not use phenolics, which may cause patient skin burns if inadequately rinsed off. Do not use alcohol, which does not have sufficient cleaning/disinfection properties.

CAUTION

POSSIBLE EQUIPMENT DAMAGE

- When cleaning/disinfecting Surgical Table, thoroughly read the cleaning fluid directions for use and follow all manufacturers directions, instructions, and cautions.
- Do not spray cleaning fluid into electric receptacles. Spray or drippage may settle onto electric circuits inside Table causing corrosion and loss of function.
- Cleaning procedures requiring articulation of the Surgical Table should be performed only by persons familiar with Table operation.
- After performing cleaning procedures, ensure pads and tabletop are completely dry before reinstalling. Failure to do so can result in damage to tabletop and pads.
- If the Surgical Table is not plugged in, protect the ac receptacle from liquid during cleaning and use. After cleaning and use, visually inspect for moisture in the ac receptacle before reconnecting power cord. Ensure cord and receptacle are completely dry before connecting to Facility power.

NOTE: The user must follow the requirements of the national committee responsible for hygiene and disinfection when cleaning Table.

Prior to cleaning this Surgical Table or table accessories, become familiar with the following procedures and information and thoroughly understand the Safety Precautions and Pinch Points listed in **SAFETY PRECAUTIONS** Section of this manual.

Disinfectants

Guidelines

The user must follow the requirements of the national committee responsible for hygiene and disinfection when cleaning surgical tables. Disinfectants can be used in spray or wipe applications. Enzymatic cleaners should be applied with a disposable cloth and not sprayed (and thoroughly rinsed with a clean, damp, lint-free cloth to remove residue).

The user must always follow manufacturer instructions for concentrations and use of cleaning products.

Some points of importance:

- Avoid discoloration of hand control keypad and display. Do not clean hand control with povidone-iodine solutions or allow such solutions to contact keypad and display surfaces.
- Ensure no excess fluids remain on pads or tabletop surfaces during and after cleaning.
- DO NOT SPRAY any cleaning product directly onto hand control or any control system components. For other system components, dampen a clean, soft cloth with the cleaning solution and wring out the excess moisture.
- The use of H2O2 + PAA (Hydrogen Peroxide + Peracetic Acid) is strongly discouraged.

Disinfectants Approved for Use

The following disinfectants have been approved for use. Disinfectants not listed may cause discoloration or deterioration of pad surface. If these recommended cleaning products are not available in your area, use a neutral disinfectant or a disinfectant with a sodium hypochlorite solution (0.1% or 1000 parts per million available chlorine).

- Coverage™ Plus Germicidal Surface Wipes Disinfecting/Deodorizing/Cleaning Wipes
- Quaternary Ammonium Compound (Quats) with Ethanol solvent

- Quaternary Ammonium Compound (Quats) with Isopropyl Alcohol (IPA) solvent
- Quaternary Ammonium Compound (Quats) with IPA + 2-Butoxyethanol solvent
- Quaternary Ammonium Compound (Quats) + Biguanide
- H2O2 (Hydrogen Peroxide)
- Neutral Cleaners

Cleaning Materials

Have the following on hand for use in conjunction with the cleaning procedures presented in this document:

- Several clean, dry lint-free cloths.
- Container of clean water.
- Approved cleaning and disinfecting solutions (prepared as directed on product labels).

Prolonging Mattress and Pad Lives

To ensure prolonged use of STERIS mattresses and pads, abide by following:

1. Inspect mattress prior to and/or after use to check for mattress integrity.
2. Follow cleaning frequency per facility protocol; however, clean all stains promptly.
3. Use hospital-grade low-level disinfectant cleaning agent appropriate for soft materials.
4. For special considerations such as large volume blood spills, contamination or exposure to high risk tissue and fluids or C. difficile, non-porous mattresses and pads may be cleaned using a sodium hypochlorite solution as per guidelines recommended by the CDC.
5. Dilute all cleaners, disinfectants and germicides in accordance with manufacturers' instructions.
6. Use a soft sponge, cloth or wipe to clean, avoiding hard bristle or abrasive brushes.
7. Allow adequate drying time before returning mattress to table or accessory surface and placing into service.
8. Avoid applying strong adhesive tape directly to mattress surface, as pulling and tearing may affect integrity of mattress material.
9. Some cleaning agents leave a residue which can build up over time. Depending on cleaning agent, it may be necessary to rinse and wipe clean with a slightly damp cloth.
10. Some procedures performed on table mattresses or pads may involve excessive fluid exposure. Be sure to drape accordingly.
11. The “Vent” flap tag is an integral part of the mattress, use care to avoid pulling, tearing, ripping or cutting the tag.
12. Wash mattresses and pads by hand only, never machine wash or machine dry.
13. Never clean mattresses or pads with harsh cleaners or solvents that include moderate to high concentrations of alcohol.
14. Never use staining [or color stripping] chemicals, iodophor type disinfectants (such as Betadine), or improperly diluted bleach; these can affect fabric finish, color, and possibly weaken the fabric.
15. Never use undiluted or improperly diluted bleach or concentrated cleaning agents.
16. Do not allow any cleaning agent to remain in contact with fabric for a prolonged time or beyond cleaning agent manufacturer’s recommendations.
17. Ensure to adequately rinse cleaning agents and disinfectants from fabric.

Removing Gross Soils

Prior to completing this procedure, become familiar with and thoroughly understand the Safety Precautions and Pinch Points listed in **SAFETY PRECAUTIONS** Section of this manual.

NOTE: Ensure protective covers are installed over receptacles.

1. Remove gross soil with a disposable cloth.
2. Place used cloth in an appropriate biohazardous waste disposal container.

Cleaning Tabletop and Pads

Prior to completing this procedure, become familiar with and thoroughly understand the Safety Precautions and Pinch Points listed in **SAFETY PRECAUTIONS** Section of this manual.

NOTE: Ensure protective covers are installed over receptacles.

1. Articulate tabletop to level and place at comfortable working height.
2. Gently "peel" pad away from tabletop fastening strips and place on another table or flat surface.
3. Hold can 6-8" (152-203 mm) from surface and spray cleaning fluid liberally on top and sides of pads or wipe with a clean cloth dampened with cleaning solution. (It is recommended to clean only one pad at a time.) Carefully avoid any pad seams.
4. Wipe dampened surfaces with a clean, lint-free cloth dampened with water to remove cleaning fluid (dampening cloth minimizes streaking).
5. Wipe cleaned surfaces again with clean, damp, lint-free cloth to remove residue.
6. Wipe cleaned surfaces again with clean, dry, lint-free cloth to remove all moisture.
7. Repeat **Steps 2 - 6** for other pads.
8. Repeat **Steps 3 - 6** for tabletop surfaces exposed when pads are removed.
9. Thoroughly dry bottom of pads and tabletop surfaces.
10. Place pads back onto tabletop by aligning with sides of table and pressing into place on fastening strips.

Cleaning Lower Surfaces

Prior to completing this procedure, become familiar with and thoroughly understand the Safety Precautions and Pinch Points listed in **SAFETY PRECAUTIONS** Section of this manual.

Use the following steps to clean surfaces on the underside of the table, yoke, shrouds, and base. Before cleaning, ensure all connectors are covered.

1. Raise table to maximum height to access lower surfaces.
2. Keep all connectors free of cleaning agents; ensure all connectors are covered.
3. Hold can of spray cleaning fluid 6-8" (152-203 mm) from surface of area to be cleaned.
4. Spray cleaning fluid liberally on area to be cleaned.
5. Wipe sprayed surfaces with a clean, lint-free cloth dampened with water to remove cleaning fluid. Note that dampening the cloth minimizes streaking.
6. Wipe cleaned surfaces again with a clean, damp, lint-free cloth to remove residue.

Cleaning Hand Control

Prior to completing this procedure, become familiar with and thoroughly understand the Safety Precautions and Pinch Points listed in **SAFETY PRECAUTIONS** Section of this manual.

NOTE: Do NOT immerse Hand Control in liquid.

1. Turn Hand Control OFF.
2. Dampen a clean, soft cloth with cleaning solution and wring out excess moisture. Wipe Hand Control surface.
3. Wipe sprayed surfaces with a clean, lint-free cloth dampened with water to remove cleaning fluid. Note that dampening cloth minimizes streaking.

Cleaning Casters and Floor Locks

Prior to completing this procedure, become familiar with and thoroughly understand the Safety Precautions and Pinch Points listed in **SAFETY PRECAUTIONS** Section of this manual.

1. Check table casters and floor locks for accumulated debris.
2. Clean floor locks if necessary.
3. Ensure floor locks are properly engaged (raising casters off floor).
4. Hold can of spray cleaning fluid 6-8" (152-203 mm) from caster.
5. Spray cleaning fluid liberally on caster.
6. Wipe caster with a cloth, dampened with water, to remove cleaning fluid and debris.
7. Repeat for the remaining three casters.

Cleaning Areas Exposed by Articulation

Prior to completing this procedure, become familiar with and thoroughly understand the Safety Precautions and Pinch Points listed in **SAFETY PRECAUTIONS** Section of this manual.

This procedure requires articulating the table through as many positions as needed to expose all articulation related surfaces to allow for cleaning.

1. Using Hand Control, articulate table to expose surface to be cleaned.
2. Hold can of spray cleaning fluid 6-8" (152-203 mm) from surface to be cleaned and spray cleaning fluid liberally on surface
3. Wipe sprayed surfaces with a clean, lint-free cloth, dampened with water to remove cleaning fluid.
4. Wipe cleaned surfaces again with a clean, damp, lint-free cloth to remove any remaining residue.
5. Ensure cleaned area is dry.
6. Repeat **Steps 1 through 5** for other articulation-related surfaces.
7. If table is not to be used after cleaning procedure, turn hand control OFF when finished.

7.4 Replacement Parts

The parts listed in this section are those that would be necessary to do minor maintenance on this Surgical Table.

To order replacement parts, proceed as follows:

1. Include part number and description listed in *Table 7-1*.
2. Include model and serial numbers of your equipment on your order.
3. Send your order directly to STERIS.

NOTE: For Replacement Parts, note the following:

a. Use only STERIS authorized parts on the equipment. Use of unauthorized parts will void the warranty.

b. This table uses lead-acid batteries. Lead-acid batteries normally are subject to self-discharge and battery-life deterioration in long-term storage. Therefore, STERIS does not recommend that batteries be procured and then stored as spare parts. If batteries are procured and stored, they should be kept covered and in a cool, dry area. Stored batteries should be recharged every six months to minimize deterioration. Use a charging current commensurate with the battery amp-hour size. Charge to a floating charge voltage equivalent to 13.6-13.8 volts.

Table 7-1. Replacement Parts

DESCRIPTION	PART NUMBER	RECOMMENDED SPARES
Cord, Hand Control	BF358	1
Power Cord, AC	093909354	1
Fuse (Main), 12 Amp	11027210	2
Fuse (Battery), 30 Amp	413724402	1
Fuse Drawer (No Fuses)	11014859	1
Battery	11022394	3
Caster	11021704	4
Floor Lock	11039680	4
Base Cover: Foot End Head End	 11028153 11028155	 1 1
Seat Side Cover: Left Hand Right Hand	 11054273 11054272	 1 1
Back Side Cover: Left Hand Right Hand	 11054277 11054274	 1 1
Column Cover Assembly (Set)	11044274	1
Bellows	11024059	1
Top Collar Cover: Left Hand Right Hand	 11940000 11940010	 1 1
Velcro Repair Kit (60”)	P764329992	1

7.5 LEVEL Check

Check the Surgical Table tabletop LEVEL function as follows:

1. Review and follow instructions presented in *Section 5.2, Operating Surgical Table*, and prepare this Surgical Table for operation.
2. Press **LEVEL** touch pad. Tabletop is gradually returned to level or horizontal position by aligning tabletop sections and then slides to zero position.

   NOTE: The LCD Display pictorials and values change accordingly.
3. Use a level and ensure tabletop is level. If not, contact STERIS.

7.6 Backup Control System Check

Check the Surgical Table Backup Control as follows:

1. Review and follow instructions presented in *Section 4.5, Backup Control System*, and prepare Surgical Table for backup system operation.
2. With tabletop at extreme low point, press **HEIGHT UP**.
3. Ensure tabletop rises correctly. If not, contact STERIS.

7.7 Battery Charging

This Section includes the following:

What You Should Know Before Charging the Batteries

Battery Charging Procedure

What You Should Know Before Charging the Batteries

This Surgical Table is powered either by Facility power or by internal batteries. If Table is to be operated on battery power, note the following:

IMPORTANT: *Batteries are recharged automatically as long as the Table is connected to Facility power. The BATTERY STATUS icon appears on LCD Display Indication Panel indicating battery condition.*

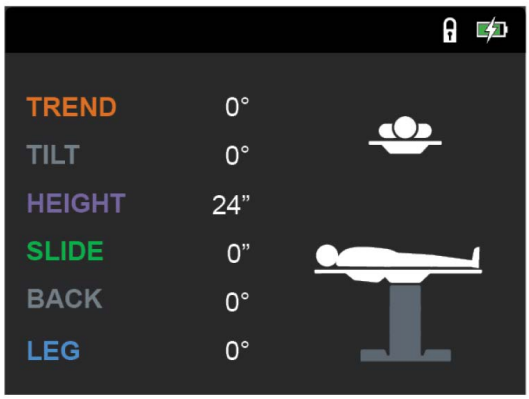

Figure 7-1. Battery Status Icon (Sample Primary Hand Control Default Screen)

Batteries require recharging on a periodic basis depending on frequency of table usage. Low or discharged battery conditions are indicated by HALF FILLED or EMPTY BATTERY icon on the Hand Control and some or all green bars on Power Panel LED Display are OFF.

NOTE: For Surgical Table batteries, note the following:

1. *Maximum life expectancy for a battery that has a history of proper care and charging is four years. More frequent battery replacement will be required if charging recommendations are not followed.*
2. *Fully charged batteries (with two years or less usage) provide Table operating power for approximately 10 hours without recharging. Note the BATTERY STATUS icon on the LCD Display Indication Panel.*
3. *When replacing batteries, all batteries need to be replaced with batteries from the same manufacturer that have the same or similar date of manufacturing.*

Lead acid batteries last longer if they are not permitted to fully discharge. Therefore, to obtain the longest life and capacity from the table batteries, always connect ac power cord to Table base and plug into an appropriate ac receptacle as often as possible, and as long as possible. If this is not always possible, recharge batteries at the following times:

- Every night.
- Whenever HALF FILLED BATTERY icon appears on LCD Status Control Indicator.
- If the Table remains in extended storage for longer than three months; charge batteries every three months.

NOTE: If the sealed lead-acid gel electrolyte-type batteries do not charge, check for the following:

1. *Battery fuse is blown - replace the fuse per the appropriate Section of Section 4.2, Installation.*
2. *AC power cord is defective - replace if necessary.*
3. *Charger Circuit is not operating.*

Battery Charging Procedure

WARNING

PERSONAL INJURY AND/OR EQUIPMENT DAMAGE HAZARD



Repairs and adjustments to this equipment must be made only by STERIS or STERIS-trained service personnel. Maintenance performed by unqualified personnel or installation of unauthorized parts could cause patient injury, personal injury, result in improper equipment performance, invalidate the warranty, or result in costly damage. Contact STERIS regarding service options.

WARNING

TRIPPING HAZARD



Route the power cord to the receptacle to minimize being tripped over by personnel in the area.

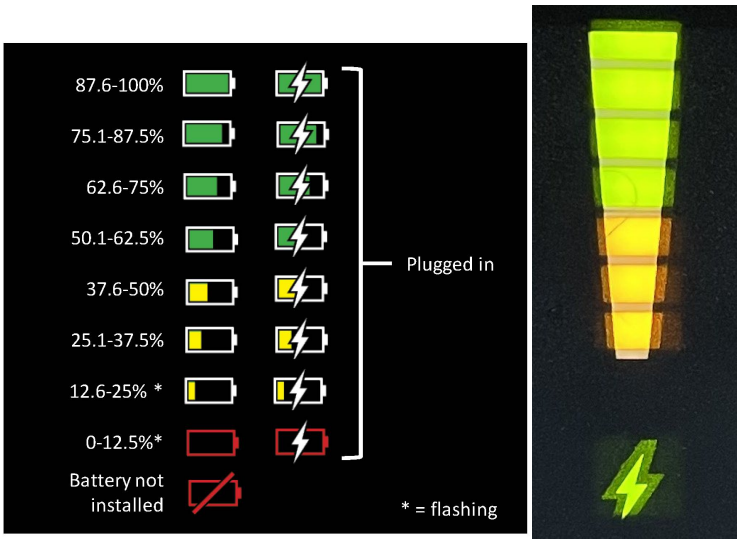

Figure 7-2. Battery Status

Recharge batteries as follows:

1. Connect ac power cord to Table base and plug into an appropriate ac receptacle.
2. Allow approximately 12 hours for full battery charge.
3. Verify fully charged BATTERY icon on Hand Control. Disconnect ac power.

Appendix A - EMC Compliance

8.1 EMC Compliance Technical Data — AC Power

The STERIS 7000-Series General Surgical Table, Model 7080, requires special precautions regarding EMC and needs to be installed and put into service according to the EMC information provided in this section of the Maintenance Manual.

NOTE: Review all EMC safety precautions listed below, before operating the Surgical Table.

WARNING

PERSONAL INJURY AND/OR EQUIPMENT DAMAGE HAZARD

- Use of this equipment adjacent to or stacked with other equipment should be avoided because it could result in improper operation. If such use is necessary, this equipment and the other equipment should be observed to verify that they are operating normally.
- Use of accessories, transducers, and cables other than those specified or provided by the manufacturer of this equipment could result in increased electromagnetic emissions or decreased electromagnetic immunity of this equipment and result in improper operation.
- This equipment/system is intended for use by healthcare professionals only. This equipment/system may cause radio interference or may disrupt the operation of nearby equipment. It may be necessary to take mitigation measures, such as re-orienting or relocating the nearby equipment, the Table, or shielding the equipment/location.

CAUTION

POSSIBLE EQUIPMENT DAMAGE

- Portable RF communications equipment (including peripherals such as antenna cables and external antennas) should be used no closer than 30 cm (12 inches) to any part of the STERIS 7000-Series General Surgical Table. Otherwise, degradation of the performance of this equipment could result.
- A risk of increased or decreased emissions immunity may result if any additional cables are attached.
- This device has not been tested for compatibility with all other potential RF Emitters such as X-ray, Metal Detectors, Electrosurgical Equipment, Diathermy Equipment, 5G Cellular, NFC, WPT, or Electronic Article Surveillance (EAS) devices. Caution should be used if such emitters are present within the use environment.

Table 8-1. Guidance and Manufacturer's Declaration – Electromagnetic Emissions

The STERIS 7000-Series General Surgical Table, Model 7080, is intended for use in the electromagnetic environment specified below. The Customer or the user of the STERIS 7000-Series General Surgical Table, model 7080, should assure that it is used in such an environment.		
Emissions test	**Compliance**	**Electromagnetic environment - guidance**
RF emissions CISPR 11	Group 1	The STERIS 7000-Series General Surgical Table, Model 7080, uses RF energy only for its internal function. Therefore, its RF emissions are very low and are not likely to cause any interference in nearby electronic equipment.
RF emissions CISPR 11	Class A	The STERIS 7000-Series General Surgical Table, Model 7080, is suitable for use in all establishments other than domestic, and may be used in domestic establishments and those directly connected to the public low-voltage power supply network that supplies buildings used for domestic purposes, provided the following warning is heeded: Warning: This equipment/system is intended for use by healthcare professionals only. This equipment/system may cause radio interference or may disrupt the operation of nearby equipment. It may be necessary to take mitigation measures, such as re-orienting or relocating the STERIS 7000-Series General Surgical Table, Model 7080, or shielding the location
Harmonic emissions IEC 61000-3-2	Class A	
Voltage fluctuations IEC 61000-3-3	Complies	

Table 8-2. Guidance and Manufacturer s Declaration - Electromagnetic Immunity

The STERIS 7000-Series General Surgical Table, Model 7080, is intended for use in the electromagnetic environment specified below. The Customer or the user of the STERIS 7000-Series General Surgical Table, Model 7080, should assure that it is used in such an environment.			
Immunity test	**IEC 60601 Test Level**	**Compliance Level**	**Electromagnetic Environment — Guidance**
Electrostatic discharge (ESD) IEC 61000-4-2	±8 kV contact	±8 kV contact	Floors should be wood, concrete or ceramic tile. If floors are covered with synthetic material, the relative humidity should be at least 30%.
	±15 kV air	±15 kV air	
Electrical fast transient/burst IEC 61000-4-4	±2 kV for power supply lines	±2 kV for power supply lines	Mains power quality should be that of a typical commercial or hospital environment.
	±1 kV for input/output lines	±1 kV for input/output lines	
Surge IEC 61000-4-5	±1 kV differential Mode	±1 kV differential Mode	Mains power quality should be that of a typical commercial or hospital environment.
	±2 kV common mode	±2 kV common mode	
Voltage dips, short interruptions and voltage variations on power supply input lines IEC 61000-4-11	0% UT for 0.5 cycle @ 0, 45, 90, 135, 180, 225, 270 and 315 degrees.	0% UT for 0.5 cycle @ 0, 45, 90, 135, 180, 225, 270 and 315 degrees.	Mains power quality should be that of a typical commercial or hospital environment. If the user of the STERIS 7000-Series General Surgical Table, Model 7080, requires continued operation during power mains interruptions, it is recommended that the STERIS 7000-Series General Surgical Table, Model 7080, be powered from an uninterruptible power supply or a battery.
	0% UT for 1 cycle and 70 % UT; 25/30 cycles Single phase: at 0°	0% UT for 1 cycle and 70 % UT; 25/30 cycles Single phase: at 0°	
	0 % UT; 250/300 cycle	0 % UT; 250/300 cycle	
Power frequency (50/60 Hz) magnetic field IEC 61000-4-8	30 A/m	30 A/m	Power frequency magnetic fields should be at levels characteristic of a typical location in a typical commercial or hospital environment.
NOTE: U_T is the A.C. mains voltage prior to application of the test level.			

Table 8-3. Guidance and Manufacturer' s Declaration - Electromagnetic Immunity

The STERIS 7000-Series General Surgical Table, Model 7080, is intended for use in the electromagnetic environment specified below. The Customer or the user of the STERIS 7000-Series General Surgical Table, Model 7080, should assure that it is used in such an environment.

Immunity Test	IEC 60601 Test Level	Compliance Level	Electromagnetic Environment - Guidance
Conducted RF IEC 61000-4-6	3 Vrms 0,15 MHz to 80 MHz	3 Vrms 0,15 MHz to 80 MHz	Portable and mobile RF communications equipment should be used no closer to any part of the STERIS 7000-Series General Surgical Table, Model 7080, including cables, than the recommended separation distance calculated from the equation applicable to the frequency of the transmitter. Recommended separation distance: d = [3.5/10] √P 80 MHz to 800 MHz d = [7/10] √P 800 MHz to 2.7 GHz where P is the maximum output power rating of the transmitter in watts (W) according to the transmitter manufacturer and d is the recommended separation distance in meters (m). Field strengths from fixed RF transmitters, as determined by an electromagnetic site survey, [a] should be less than the compliance level in each frequency range. [b] Interference may occur in the vicinity of equipment marked with the following symbol: 
	6 Vrms in ISM and amateur radio bands between 0,15 MHz and 80 MHz	6 Vrms in ISM and amateur radio bands between 0,15 MHz and 80 MHz	
	80% AM at 1 kHz	80% AM at 1 kHz	
Radiated RF IEC 61000-4-3	3 V/m 80 MHz to 2.7 GHz	3 V/m 80 MHz to 2.7 GHz	

NOTE: At 80 MHz and 800 MHz, the higher frequency range applies.

NOTE: These guidelines may not apply in all situations. Electromagnetic propagation is affected by absorption and reflection from structures, objects and people.

Field strengths from fixed transmitters, such as base stations for radio (cellular/cordless) telephones and land mobile radios, amateur radio, AM and FM radio broadcast and TV broadcast cannot be predicted theoretically with accuracy. To assess the electromagnetic environment due to fixed RF transmitters, an electromagnetic site survey should be considered. If the measured field strength in the location in which the STERIS 7000-Series General Surgical Table, Model 7080, is used exceeds the applicable RF compliance level above, the STERIS 7000-Series General Surgical Table, Model 7080, should be observed to verify normal operation. If abnormal performance is observed, additional measures may be necessary, such as re-orienting or relocating the STERIS 7000-Series General Surgical Table, Model 7080.

Table 8-4. Guidance and Manufacturer's Declaration – Electromagnetic Immunity

The STERIS 7000-Series General Surgical Table, Model 7080, is intended for use in the electromagnetic environment specified below. The Customer or the user of the STERIS 7000-Series General Surgical Table, Model 7080, should assure that it is used in such an environment.

Immunity Test	IEC 60601 Test Level	Compliance Level	Electromagnetic Environment - Guidance
IMMUNITY to proximity fields from RF wireless communications equipment	See nested table below		Portable and mobile RF communications equipment should be used no closer to any part of the STERIS 7000-Series General Surgical Table, Model 7080, including cables, than the recommended separation distance calculated from the equation applicable to the frequency of the transmitter. Recommended separation distance: E = [6/d] √P d = [6/E] √P where P is the maximum output power rating of the transmitter in watts (W) according to the transmitter manufacturer, d is the recommended separation distance in meters (m), and E is the field strength in V/m. Field strengths from fixed RF transmitters, as determined by an electromagnetic site survey, should be less than the compliance level in each frequency range. Interference may occur in the vicinity of equipment marked with the following symbol: 
IMMUNITY to proximity magnetic fields IEC 6100–4–39			

MHz	Modulation	Field Strength	MHz	Modulation	Field Strength
385	18 Hz	27 V/m	385	18 Hz	27 V/m
450	18 Hz	28 V/m	450	18 Hz	28 V/m
710	217 Hz	9 V/m	710	217 Hz	9 V/m
745	217 Hz	9 V/m	745	217 Hz	9 V/m
780	217 Hz	9 V/m	780	217 Hz	9 V/m
810	18 Hz	28 V/m	810	18 Hz	28 V/m
870	18 Hz	28 V/m	870	18 Hz	28 V/m
930	18 Hz	28 V/m	930	18 Hz	28 V/m
1720	217 Hz	28 V/m	1720	217 Hz	28 V/m
1845	217 Hz	28 V/m	1845	217 Hz	28 V/m
1970	217 Hz	28 V/m	1970	217 Hz	28 V/m
2450	217 Hz	28 V/m	2450	217 Hz	28 V/m
5240	217 Hz	9 V/m	5240	217 Hz	9 V/m
5500	217 Hz	9 V/m	5500	217 Hz	9 V/m
5785	217 Hz	9 V/m	5785	217 Hz	9 V/m
0.1342	2.1kHz	65 A/m	0.1342	2.1kHz	65 A/m
13.56	50kHz	7.5 A/m	13.56	50kHz	7.5 A/m
0.030	CW	8 A/m	0.030	CW	8 A/m

NOTE: These guidelines may not apply in all situations. Electromagnetic propagation is affected by absorption and reflection from structures, objects, and people.

Table 8-5. Recommended separation distances between portable and mobile RF communications equipment as well as RF wireless communications equipment and the STERIS 7000-Series General Surgical Table, Model 7080.

The STERIS 7000-Series General Surgical Table, Model 7080, is intended for use in an electromagnetic environment in which radiated RF disturbances are controlled. The Customer or the user of the STERIS 7000-Series General Surgical Table, Model 7080, can help prevent electromagnetic interference by maintaining a minimum distance between portable and mobile RF communications equipment (transmitters) and the STERIS 7000-Series General Surgical Table, Model 7080, as recommended below, according to the maximum output power of the communications equipment.

Rated maximum output power of transmitter (W)	**Separation distance according to frequency of transmitter (m)**			
	80 to 800 MHz $d = [3.5/3]\sqrt{P}$	**800 MHz to 2.7 GHz** $d = [7/3]\sqrt{P}$	**710, 745, 780, 5240, 5500, 5785 MHz** $d = [6/9]\sqrt{P}$	**385, 450,810, 870, 930, 1720, 1845, 1970, 2450 MHz** $d = [6/28]\sqrt{P}$
0.01	0.117	0.233	0.067	0.021
0.1	0.369	0.738	0.211	0.070
1	1.170	2.333	0.667	0.214
10	3.689	7.379	2.108	0.700
100	11.667	23.333	6.670	2.143

For transmitters rated at a maximum output power not listed above, the recommended separation distance d in metres (m) can be estimated using the equation applicable to the frequency of the transmitter, where P is the maximum output power rating of the transmitter in watts (W) according to the transmitter manufacturer.

NOTE: At 80 MHz and 800 MHz, the separation distance for the higher frequency range applies.

NOTE: These guidelines may not apply in all situations. Electromagnetic propagation is affected by absorption and reflection from structures, objects and people.

8.2 EMC Compliance Technical Data - Battery Power

The STERIS 7000-Series General Surgical Table, Model 7080, requires special precautions regarding EMC and needs to be installed and put into service according to the EMC information provided in this section of the Maintenance Manual.

NOTE: Review all EMC safety precautions listed below, before operating the Surgical Table.

WARNING

PERSONAL INJURY AND/OR EQUIPMENT DAMAGE HAZARD

- Use of this equipment adjacent to or stacked with other equipment should be avoided because it could result in improper operation. If such use is necessary, this equipment and the other equipment should be observed to verify that they are operating normally.
- Use of accessories, transducers, and cables other than those specified or provided by the manufacturer of this equipment could result in increased electromagnetic emissions or decreased electromagnetic immunity of this equipment and result in improper operation.
- This equipment/system is intended for use by healthcare professionals only. This equipment/system may cause radio interference or may disrupt the operation of nearby equipment. It may be necessary to take mitigation measures, such as re-orienting or relocating the nearby equipment, the Table, or shielding the equipment/location.

CAUTION

POSSIBLE EQUIPMENT DAMAGE

- Portable RF communications equipment (including peripherals such as antenna cables and external antennas) should be used no closer than 30 cm (12 inches) to any part of the STERIS 7000-Series General Surgical Table. Otherwise, degradation of the performance of this equipment could result.
- A risk of increased or decreased emissions immunity may result if any additional cables are attached.
- This device has not been tested for compatibility with all other potential RF Emitters such as X-ray, Metal Detectors, Electrosurgical Equipment, Diathermy Equipment, 5G Cellular, NFC, WPT, or Electronic Article Surveillance (EAS) devices. Caution should be used if such emitters are present within the use environment.

Table 8-6. Guidance and Manufacturer's Declaration – Electromagnetic Emissions

The STERIS 7000-Series General Surgical Table, Model 7080, is intended for use in the electromagnetic environment specified below. The Customer or the user of the STERIS 7000-Series General Surgical Table, model 7080, should assure that it is used in such an environment.		
Emissions test	**Compliance**	**Electromagnetic environment - guidance**
RF emissions CISPR 11	Group 1	The STERIS 7000-Series General Surgical Table, Model 7080, uses RF energy only for its internal function. Therefore, its RF emissions are very low and are not likely to cause any interference in nearby electronic equipment.
RF emissions CISPR 11	Class A	The STERIS 7000-Series General Surgical Table, Model 7080, is suitable for use in all establishments other than domestic, and may be used in domestic establishments and those directly connected to the public low-voltage power supply network that supplies buildings used for domestic purposes, provided the following warning is heeded: Warning: This equipment/system is intended for use by healthcare professionals only. This equipment/system may cause radio interference or may disrupt the operation of nearby equipment. It may be necessary to take mitigation measures, such as re-orienting or relocating the STERIS 7000-Series General Surgical Table, Model 7080, or shielding the location

Table 8-7. Guidance and Manufacturer s Declaration - Electromagnetic Immunity

The STERIS 7000-Series General Surgical Table, Model 7080, is intended for use in the electromagnetic environment specified below. The Customer or the user of the STERIS 7000-Series General Surgical Table, Model 7080, should assure that it is used in such an environment.			
Immunity test	**IEC 60601 Test Level**	**Compliance Level**	**Electromagnetic Environment — Guidance**
Electrostatic discharge (ESD) IEC 61000-4-2	±8 kV contact	±8 kV contact	Floors should be wood, concrete or ceramic tile. If floors are covered with synthetic material, the relative humidity should be at least 30%.
	±15 kV air	±15 kV air	
Power frequency (50/60 Hz) magnetic field IEC 61000-4-8	30 A/m	30 A/m	Power frequency magnetic fields should be at levels characteristic of a typical location in a typical commercial or hospital environment.

Table 8-8. Guidance and Manufacturer' s Declaration - Electromagnetic Immunity

The STERIS 7000-Series General Surgical Table, Model 7080, is intended for use in the electromagnetic environment specified below. The Customer or the user of the STERIS 7000-Series General Surgical Table, Model 7080, should assure that it is used in such an environment.

Immunity Test	IEC 60601 Test Level	Compliance Level	Electromagnetic Environment - Guidance
Conducted RF IEC 61000-4-6	3 Vrms 0,15 MHz to 80 MHz	3 Vrms 0,15 MHz to 80 MHz	Portable and mobile RF communications equipment should be used no closer to any part of the STERIS 7000-Series General Surgical Table, Model 7080, including cables, than the recommended separation distance calculated from the equation applicable to the frequency of the transmitter. Recommended separation distance: d = [3.5/10] √P 80 MHz to 800 MHz d = [7/10] √P 800 MHz to 2.7 GHz where P is the maximum output power rating of the transmitter in watts (W) according to the transmitter manufacturer and d is the recommended separation distance in meters (m). Field strengths from fixed RF transmitters, as determined by an electromagnetic site survey, [a] should be less than the compliance level in each frequency range. [b] Interference may occur in the vicinity of equipment marked with the following symbol: 
	6 Vrms in ISM and amateur radio bands between 0,15 MHz and 80 MHz	6 Vrms in ISM and amateur radio bands between 0,15 MHz and 80 MHz	
	80% AM at 1 kHz	80% AM at 1 kHz	
Radiated RF IEC 61000-4-3	3 V/m 80 MHz to 2.7 GHz	3 V/m 80 MHz to 2.7 GHz	

NOTE: At 80 MHz and 800 MHz, the higher frequency range applies.

NOTE: These guidelines may not apply in all situations. Electromagnetic propagation is affected by absorption and reflection from structures, objects and people.

Field strengths from fixed transmitters, such as base stations for radio (cellular/cordless) telephones and land mobile radios, amateur radio, AM and FM radio broadcast and TV broadcast cannot be predicted theoretically with accuracy. To assess the electromagnetic environment due to fixed RF transmitters, an electromagnetic site survey should be considered. If the measured field strength in the location in which the STERIS 7000-Series General Surgical Table, Model 7080, is used exceeds the applicable RF compliance level above, the STERIS 7000-Series General Surgical Table, Model 7080, should be observed to verify normal operation. If abnormal performance is observed, additional measures may be necessary, such as re-orienting or relocating the STERIS 7000-Series General Surgical Table, Model 7080.

Table 8-9. Guidance and Manufacturer's Declaration – Electromagnetic Immunity

The STERIS 7000-Series General Surgical Table, Model 7080, is intended for use in the electromagnetic environment specified below. The Customer or the user of the STERIS 7000-Series General Surgical Table, Model 7080, should assure that it is used in such an environment.

Immunity Test	IEC 60601 Test Level	Compliance Level	Electromagnetic Environment - Guidance
IMMUNITY to proximity fields from RF wireless communications equipment	See nested table below		Portable and mobile RF communications equipment should be used no closer to any part of the STERIS 7000-Series General Surgical Table, Model 7080, including cables, than the recommended separation distance calculated from the equation applicable to the frequency of the transmitter. Recommended separation distance: E = [6/d] √P d = [6/E] √P where P is the maximum output power rating of the transmitter in watts (W) according to the transmitter manufacturer, d is the recommended separation distance in meters (m), and E is the field strength in V/m. Field strengths from fixed RF transmitters, as determined by an electromagnetic site survey, should be less than the compliance level in each frequency range. Interference may occur in the vicinity of equipment marked with the following symbol: 
IMMUNITY to proximity magnetic fields IEC 6100–4–39			

MHz	Modulation	Field Strength	MHz	Modulation	Field Strength
385	18 Hz	27 V/m	385	18 Hz	27 V/m
450	18 Hz	28 V/m	450	18 Hz	28 V/m
710	217 Hz	9 V/m	710	217 Hz	9 V/m
745	217 Hz	9 V/m	745	217 Hz	9 V/m
780	217 Hz	9 V/m	780	217 Hz	9 V/m
810	18 Hz	28 V/m	810	18 Hz	28 V/m
870	18 Hz	28 V/m	870	18 Hz	28 V/m
930	18 Hz	28 V/m	930	18 Hz	28 V/m
1720	217 Hz	28 V/m	1720	217 Hz	28 V/m
1845	217 Hz	28 V/m	1845	217 Hz	28 V/m
1970	217 Hz	28 V/m	1970	217 Hz	28 V/m
2450	217 Hz	28 V/m	2450	217 Hz	28 V/m
5240	217 Hz	9 V/m	5240	217 Hz	9 V/m
5500	217 Hz	9 V/m	5500	217 Hz	9 V/m
5785	217 Hz	9 V/m	5785	217 Hz	9 V/m
0.1342	2.1kHz	65 A/m	0.1342	2.1kHz	65 A/m
13.56	50kHz	7.5 A/m	13.56	50kHz	7.5 A/m
0.030	CW	8 A/m	0.030	CW	8 A/m

NOTE: These guidelines may not apply in all situations. Electromagnetic propagation is affected by absorption and reflection from structures, objects, and people.

Table 8-10. Recommended separation distances between portable and mobile RF communications equipment as well as RF wireless communications equipment and the STERIS 7000-Series General Surgical Table, Model 7080.

The STERIS 7000-Series General Surgical Table, Model 7080, is intended for use in an electromagnetic environment in which radiated RF disturbances are controlled. The Customer or the user of the STERIS 7000-Series General Surgical Table, Model 7080, can help prevent electromagnetic interference by maintaining a minimum distance between portable and mobile RF communications equipment (transmitters) and the STERIS 7000-Series General Surgical Table, Model 7080, as recommended below, according to the maximum output power of the communications equipment.

Rated maximum output power of transmitter (W)	**Separation distance according to frequency of transmitter (m)**			
	80 to 800 MHz $d = [3.5/3]\sqrt{P}$	**800 MHz to 2.7 GHz** $d = [7/3]\sqrt{P}$	**710, 745, 780, 5240, 5500, 5785 MHz** $d = [6/9]\sqrt{P}$	**385, 450,810, 870, 930, 1720, 1845, 1970, 2450 MHz** $d = [6/28]\sqrt{P}$
0.01	0.117	0.233	0.067	0.021
0.1	0.369	0.738	0.211	0.070
1	1.170	2.333	0.667	0.214
10	3.689	7.379	2.108	0.700
100	11.667	23.333	6.670	2.143

For transmitters rated at a maximum output power not listed above, the recommended separation distance d in metres (m) can be estimated using the equation applicable to the frequency of the transmitter, where P is the maximum output power rating of the transmitter in watts (W) according to the transmitter manufacturer.

NOTE: At 80 MHz and 800 MHz, the separation distance for the higher frequency range applies.

NOTE: These guidelines may not apply in all situations. Electromagnetic propagation is affected by absorption and reflection from structures, objects and people.