STERIS®

STERIS 4095 General Surgical Table

Operator Manual



en

056404443
Revision G

© 2024 STERIS. All rights reserved.

Published: 2024-6-25

A Word From STERIS

Introduction

This manual contains important information on proper use and maintenance of this Surgical Table. **All personnel involved in the use and maintenance of this equipment must carefully review and comply with the Safety Precautions and instructions contained in this manual.** These instructions are important to protect the health and safety of personnel and patients involved in the use of this Surgical Table and should be retained in a conveniently accessible area for quick reference. This Surgical Table is only to be operated by users who have successfully been trained on its operation. Please contact STERIS for the required in-service and training.

Complete instructions for uncrating have been furnished. If missing, contact STERIS for a replacement copy, giving the serial and model numbers of the table. STERIS carries a complete line of accessories for use with this table. Contact STERIS for more information.

NOTE: A patient grounding post/potential equalization terminal (male connector, DIN 42801) is provided. The female connector for patient grounding is not furnished by STERIS.

Advisory

Safety Precautions and Pinch Points to be observed when operating and servicing this Surgical Table are included in this manual in the **Safety Precautions and Pinch Points** Section. Do not operate or service the table until you have become familiar with this information.

WARNING

PERSONAL INJURY AND/OR EQUIPMENT DAMAGE HAZARD

Repairs and adjustments to this equipment must be made only by STERIS or STERIS-trained service personnel. Maintenance performed by unqualified personnel or installation of unauthorized parts could cause patient injury, personal injury, result in improper equipment performance, invalidate the warranty, or result in costly damage. Contact STERIS regarding service options.

Serious incidents that have occurred in relation to this medical device should be reported to the manufacturer and competent authority in the country where the incident occurred.

Indications for Use

This Surgical Table is an electro-hydraulically operated and designed to support virtually all general surgical procedures including cardiac and vascular, endoscopic, gynecology, urology, nephrectomy, neurology, ophthalmologic, and orthopedics with the addition of STERIS table accessories.

Waste Disposal

WARNING

DISPOSAL HAZARD

This product contains materials which may require disposal through appropriately licensed and permitted hazardous waste management firms.

CAUTION

POSSIBLE EQUIPMENT DAMAGE

Use of incorrect hydraulic oil may severely damage the table and/or cause malfunction. Contact STERIS for proper hydraulic oil.

The following materials may be contained within the table. When disposing of the table or its parts, ensure the proper disposal of hazardous and other regulated waste in compliance with federal, state, and local regulations.

Lead Acid (Pb/H_2SO_4): gelled cell batteries located in the table base at the head end of the table. Approximate weight 5 lb (2 kg).

Lead (Pb) in Solder: contained in solder on circuit boards and in some miscellaneous wire connections. Minute amounts.

Electronic and Electrical Parts: not known to require special disposal as of the date of this manual.

Metal Parts: made from aluminum (Al), steel (Fe), cast iron (Fe), copper (Cu), and copper alloys (Cu/x), plastic, synthetic rubber, plating (Cr, Ni, Zn, Au), and adhesives not known to require special disposal methods as of the date of this manual.

Hydraulic Oil: contained in hydraulic components located in the base, column, leg section, back section, and hydraulic system lines and hoses.

Polyvinylchloride (PVC): Approximate weight 3.8 lb (1.7 kg).

Service Information

A thorough preventive maintenance program is essential for safe and proper unit operation. This manual contains basic maintenance schedules and procedures which should be followed for satisfactory equipment performance. Comprehensive instructions for monthly, quarterly and semi-annual preventive maintenance can be found in the Maintenance Manual (available from STERIS).

Only STERIS-trained personnel should attempt to perform maintenance on the table, to avoid personal injury, improper equipment performance, invalidation of the equipment warranty or other costly damage. Contact STERIS for additional information on available training programs for biomedical staff.

Customers are encouraged to contact STERIS concerning our comprehensive preventive maintenance program. Under the terms of this program, preventive maintenance, adjustments and replacement of worn parts are provided on a scheduled basis to help ensure optimal equipment performance and help avoid untimely or costly interruptions. STERIS maintains a global staff of well equipped, factory-trained technicians to provide these services, as well as expert repair services. Please contact STERIS for details.

Associated Publications

Publications listed below are those which assist in the operation and service of this Surgical Table. When ordering, please include the part number and description of each publication requested. Order directly from STERIS.

Drawing Number	Drawing Title
P056404443	Operator Manual
P764333765	Maintenance Manual
P056404446	Tech Data
P150832672	Uncrating Instructions

Contact Information

EC REP

STERIS Ireland Limited
IDA Business and Technology Park
Tullamore
County Offaly
R35 X865 Ireland

CE

Manufactured by:
STERIS Corporation
2720 Gunter Park East
Montgomery, AL 36109 USA
TEL: 334 277 6660
8004449009
www.steris.com

Class 1 Equipment
Type B Equipment



Splash-Proof Equipment (enclosed equipment protected against splashing water, IPX4)



Equipment not suitable for use in the presence of a flammable anesthetic mixture with air or oxygen or nitrous oxide.

Suitable for intermittent operation 3 min/hr.

The base language of this document is ENGLISH. Any translations must be made from the base language document.

TABLE OF CONTENTS

Section Number	Description	Page
1	**Safety Precautions and Pinch Points**	**1**
1.1	Introduction	1
1.2	Warning — Pinching Hazard	1
1.3	Warning — Tipping Hazard	4
1.4	Warning — Explosion Hazard	5
1.5	Warning — Tripping Hazard	5
1.6	Warning — Personal Injury Hazard	6
1.7	Warning — Instability Hazard	8
1.8	Warning — Pinching and Tipping Hazard	8
1.9	Warning — Personal Injury and/or Equipment Damage	8
1.10	Warning — Infection Hazard	11
1.11	Warning — Disposal Hazard	11
1.12	Warning — Electric Shock Hazard	12
1.13	Caution — Possible Equipment Damage	12
2	**Glossary**	**15**
2.1	Terms and Definitions	15
2.2	Definition of Symbols on Table	16
2.3	Hand Control Symbols	17
3	**Important User Information**	**25**
3.1	Introduction	25
3.2	General Description	25
3.3	Technical Specifications	27
3.4	Tabletop Articulation and Patient Positioning	32
4	**Before Using the Table**	**35**
4.1	Introduction	35
4.2	Installation	35
4.3	Installing/Removing Dual-Articulating Head Rest	44
4.4	Installing/Removing Leg Section	46
5	**Surgical Table Operation**	**49**
5.1	Introduction	49
5.2	Universal Hand Control	51
5.3	Reverse Patient Orientation	54
5.4	Optional Foot Control Operation	55
5.5	Backup (Override) Control System	55
6	**Troubleshooting**	**59**
6.1	Introduction	59
6.2	1 Key Only — ALM	60
6.3	ALS Alarm When Raising Back Section - nonALM	60
6.4	Bad Version — ALM	60
6.5	Batt Defect — ALM	60
6.6	Batteries Do Not Charge - nonALM	61
6.7	Battery Fuse — ALM	61
6.8	Battery Mode — ALM	61
6.9	Cannot Read Hand Control Display — nonALM	61

6.10 Charger Defect — ALM 62
6.11 Column Shroud Failure - nonALM 62
6.12 Connect AC Power or Plug Mains — ALM 62
6.13 Dual Command — ALM 62
6.14 False ALS After Slide-to-Foot Articulation - nonALM 63
6.15 Floor Lock Issue — nonALM 63
6.16 Hand Control Does Not Activate — nonALM 63
6.17 Hydraulic Pump Does Not Operate But Tabletop Slide Function Does - nonALM 64
6.18 Hydraulic Reservoir Shows Oil Loss But No Leaks Found - nonALM 64
6.19 INTELLIPOWER OFF, Hand Control ON, Power Switch LED ON - nonALM 64
6.20 INTELLIPOWER ON, Battery Status Indicator ON, Power Plug OFF - nonALM 64
6.21 Lock Again — ALM 65
6.22 Loss of Table Function But Battery Fuse (F8) OK - nonALM 65
6.23 Low Battery — ALM 65
6.24 Main Power Switch Green LED Off 66
6.25 Motor Defect — ALM 66
6.26 Motor Fail — ALM 66
6.27 No Functions Available Using Hand Control — nonALM 67
6.28 No Tabletop Slide and Floor Lock Operation - nonALM 67
6.29 Only Tabletop Slide Function Operates — nonALM 67
6.30 Power Defect — ALM 68
6.31 Pump Defect — ALM 68
6.32 Pump Fail — ALM 68
6.33 Reverse Orient — ALM 68
6.34 Sensor DEF — ALM 69
6.35 Sensor Defect — ALM 69
6.36 Sensor Fail — ALM 69
6.37 Slide Defect — ALM 69
6.38 Slide Fail — ALM 69
6.39 Table Articulation Drifts — nonALM 70
6.40 Table Does Not Function on Facility Power But Does on Battery Power - nonALM 70
6.41 Table Does Not LEVEL Using Hand Control — nonALM 70
6.42 Table Does Not Raise/Lower Using Hand Control — nonALM 71
6.43 Table Does Not Tilt Using Hand Control — nonALM 71
6.44 Table Does Not Trendelenburg/Reverse Trendelenburg Using Hand Control — nonALM 71
6.45 Table Has Longitudinal Mechanical Play - nonALM 72
6.46 Table Is Locked But Hand Control Indicates Unlocked - nonALM 72
6.47 Table Remains on Battery Power — nonALM 72
6.48 Table Rocks While on Casters - nonALM 72
6.49 Unanticipated Table Movement — nonALM 73
6.50 Unusual Noise While Tabletop Is Translating - nonALM 73
6.51 Valve Defect — ALM 73
6.52 Valve Fail — ALM 73
6.53 Voltage Peak — ALM 74
6.54 Wrench 2 — ALM 74

6.55 Wrench 7 — ALM 74
6.56 Wrench 9 — ALM 74
6.57 Wrench 10 — ALM 75
6.58 Wrench 11 — ALM 75
6.59 Wrench 12 — ALM 75
6.60 Wrench 13 — ALM 75
6.61 Wrench 14 — ALM 76
6.62 Wrench 15 — ALM 76
6.63 Wrench 17 — ALM 76
6.64 Wrench 18 — ALM 76
6.65 Wrench 20 — ALM 77
6.66 Wrench 21 — ALM 77
6.67 Wrench 22 — ALM 77
6.68 Wrench 23 — ALM 77
6.69 Wrench 24 — ALM 77
6.70 Wrench 25 — ALM 78
6.71 Wrench 26 — ALM 78
6.72 Wrench 27 — ALM 78
6.73 Wrench 28 — ALM 78
6.74 Wrench 29 — ALM 78
6.75 Wrench 30 — ALM 79
6.76 Wrench 31 — ALM 79
6.77 Wrench 32 — ALM 79
6.78 Wrench 33 — ALM 79
6.79 Wrench 34 — ALM 80
6.80 Wrench 37 — ALM 80
6.81 Wrench 42 — ALM 80
6.82 Wrench 47 — ALM 81
6.83 Wrong Use — ALM 81
7 Routine Maintenance 82
7.1 Read Before Performing Routine Maintenance 82
7.2 Cleaning Table 83
7.3 Bi-Weekly Maintenance 87
7.4 Battery Charging 87
7.5 Auto Limit Sensor (ALS) Check 89
7.6 LEVEL Check 89
7.7 Auxiliary Control Check 89
7.8 Sealing Table Covers 90
7.9 Replacement Parts 94
8 Appendix A - EMC Compliance 96
8.1 EMC Compliance Technical Data 96

Safety Precautions and Pinch Points

1.1 Introduction

The following *Safety Precautions* **must** be observed when operating or servicing this Surgical Table. For emphasis, certain *Safety Precautions* are repeated throughout the manual.

- **WARNING indicates the potential for personal injury.**
- **CAUTION indicates the potential for damage to equipment.**

It is important to review ALL *Safety Precautions* before operating, uncrating, testing, or servicing the table.

Strictly following these *Safety Precautions* enhances your ability to safely and effectively utilize the Surgical Table and helps the Customer avoid improper maintenance methods that may damage the table or render it unsafe. It is important to understand that these *Safety Precautions* are not exhaustive; Customers are encouraged to develop their own safety policies and procedures to enhance and complement these *Safety Precautions*.

IMPORTANT: *Please read the Operator Manual to get the best understanding and to help ensure best performance of this Surgical Table.*

Any maintenance performed on this Surgical Table, other than described in the manual (unless by authorized representatives of STERIS), shall be at the risk of invalidating the table warranty.

NOTE: Disregarding the presented safety information is considered ABNORMAL USE of this product.

1.2 Warning — Pinching Hazard

WARNING

PINCHING HAZARD

⚠ Pinch points are created during extreme tabletop articulation. Carefully review the illustrations in *Section 1.2, Warning — Pinching Hazard*, before operating the Table.

⚠ To avoid serious injury, keep limbs, fingers, and other body areas clear of all pinch points when positioning the Table.

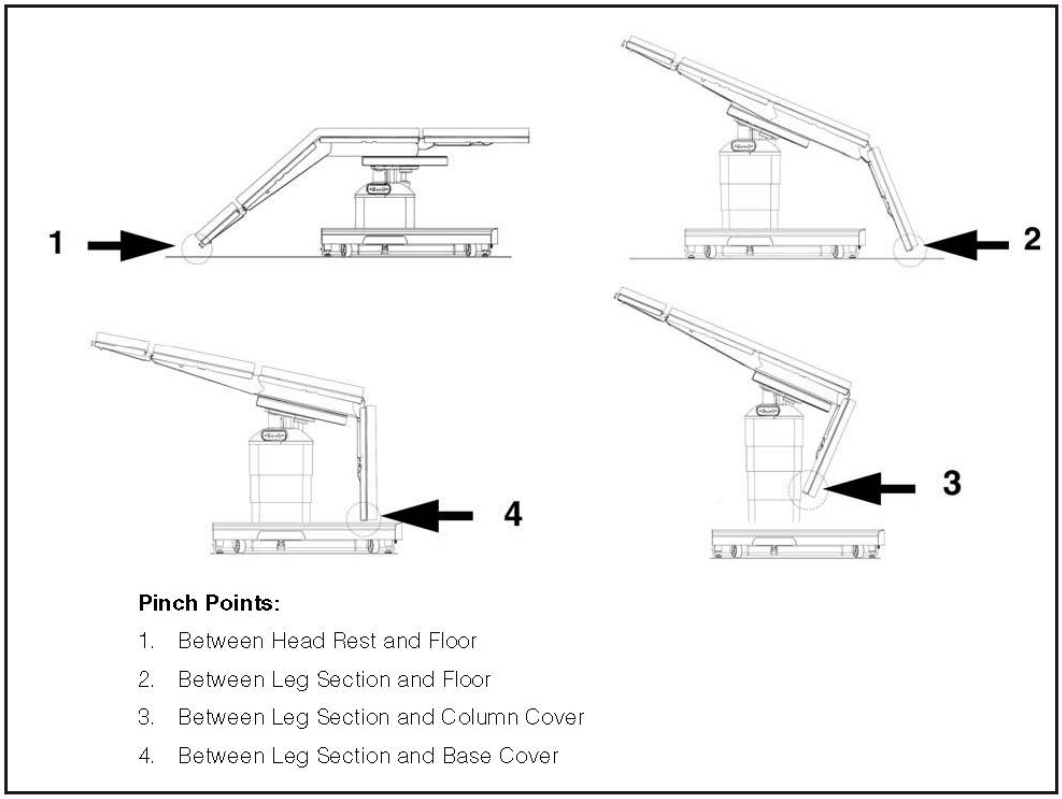

Figure 1-1. Table Pinch Points

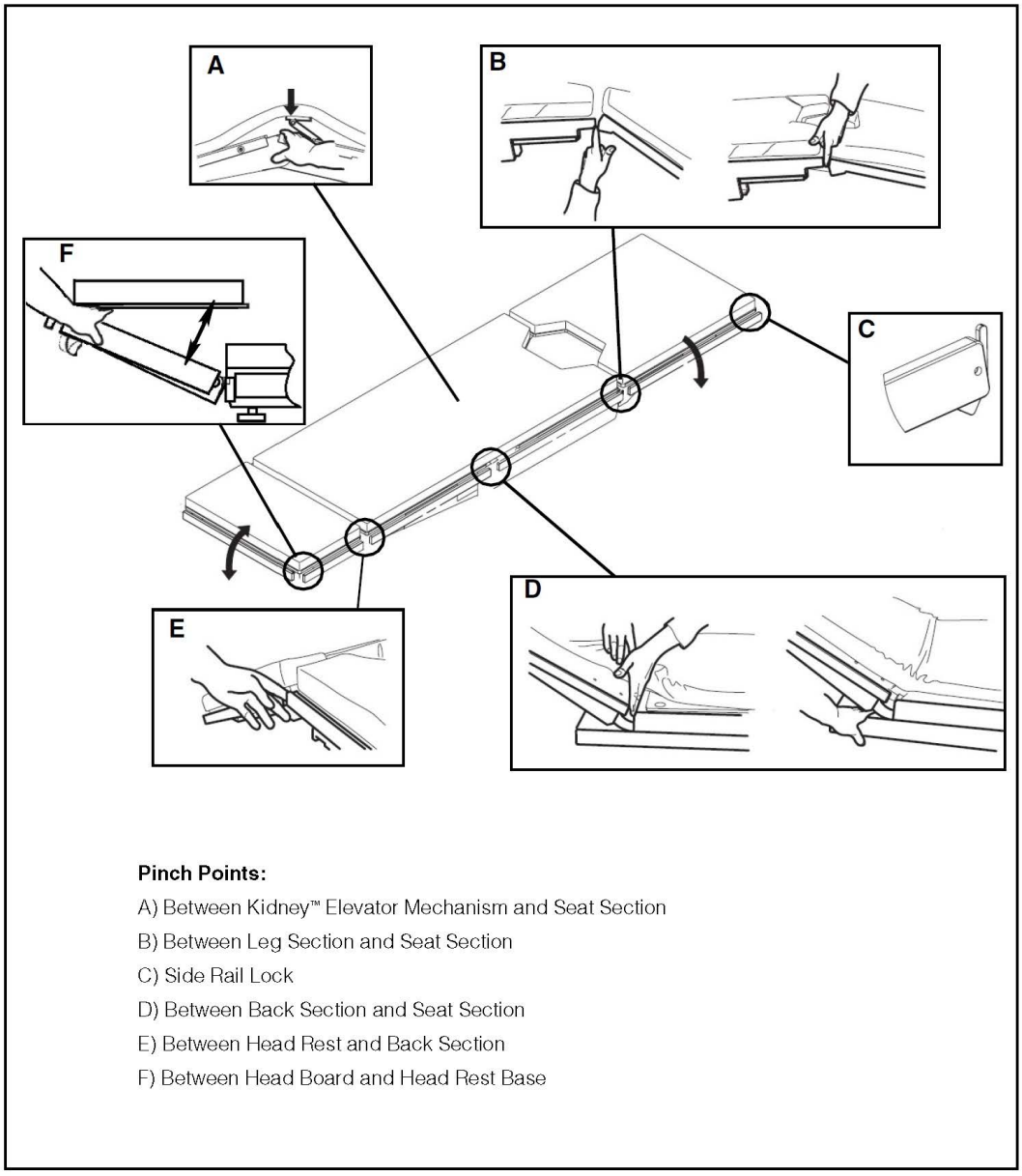

Figure 1-2. Tabletop Pinch Points

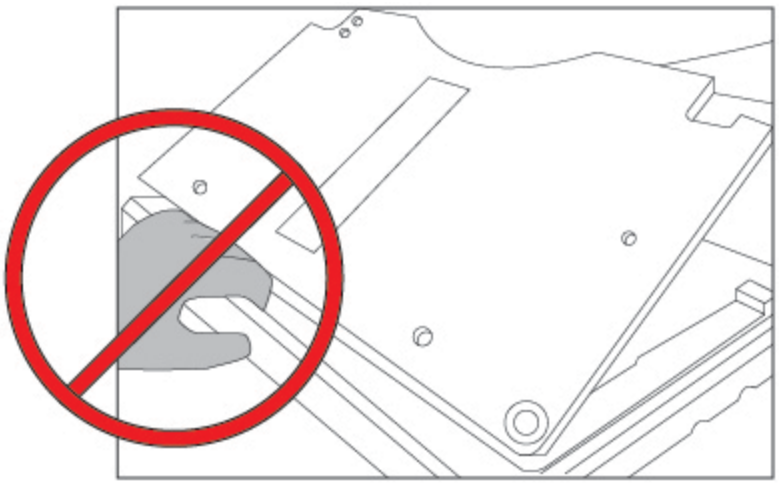

Figure 1-3. Dual-Articulating Headrest Pinch Point (Typical)

NOTE: The spacing between the rail and the headrest is reduced as the headrest is adjusted. DO NOT hold end rail while adjusting headrest. See *Figure 1-3*.

1.3 Warning — Tipping Hazard

WARNING

TIPPING HAZARD

⚠ Do not place patient on this Surgical Table unless floor locks are engaged.

⚠ This Surgical Table is not to be used to transport patients. With exception of slight repositioning, as detailed in the operating instructions, never disengage floor locks when patient is on table. Failure to heed this warning can result in injury to both the patient and the operating room staff.

Do not use this Surgical Table for patients exceeding the maximum patient weight of:

- **1100 lb (499 kg)** Load, **Normal** and **Reverse** Patient Position; raise or lower only (no tabletop articulation or slide).
- **1000 lb (454 kg)** Load, **Normal** and **Reverse** Patient Position; raise or lower; includes all tabletop articulation except tabletop slide.
- **600 lb (272 kg)** Load, **Normal** Patient Position; raise or lower; includes all tabletop articulation and full tabletop slide (also includes **Reverse** patient slide toward patient feet but not patient slide toward patient head).
- **575 lb (260 kg)** Load, **Normal** and **Reverse** Patient; raise or lower; includes all tabletop articulation and full tabletop slide, including **Reverse** patient slide toward patient feet and toward patient head.

Center tabletop over column before applying chest compressions.

Center tabletop over column before transferring patient on or off of Surgical Table.

1.4 Warning — Explosion Hazard

WARNING

EXPLOSION HAZARD

Surgical Table must not be used in the presence of flammable anesthetics.

1.5 Warning — Tripping Hazard

WARNING

TRIPPING HAZARD

Route the power cord to the receptacle to minimize being tripped over by personnel in the area.

1.6 Warning — Personal Injury Hazard

WARNING

PERSONAL INJURY HAZARD

- Healthcare professionals must ensure patients are positioned and monitored to prevent compromising respiration, nerve pathways, or circulation.
- When installing any table accessory, check for correct attachment and tighten securely (if appropriate). Do not use worn or damaged accessory. Check installation before using any accessory.
- Unanticipated table movement could cause patient injury. Patient must be secured to the table in accordance with recommended positioning practices.
- If the integrity of the external protective ground installation or arrangement is in doubt, operate the table from its internal power source.
- Patient injury may result if the operator of this table is not completely familiar with the controls for patient positioning and table operation. All users should carefully review the Operator Manual before operating the table.
- When cleaning/disinfecting table, do not use phenolics, which may cause patient skin burns if inadequately rinsed off, or alcohol, which does not have sufficient cleaning/ disinfection properties.
- If an antistatic path is necessary, STERIS recommends antistatic pads (specifically developed for this table) in direct contact with the patient. STERIS recommends that the table be positioned on antistatic floor or connected to equalization device (equipotential connector).
- To prevent column cover from falling, securely hold cover when removing fastening screws.
- Breaking hydraulic fittings may cause associated table sections to fall and excessive fluid may flow from the fitting.

Read this procedure carefully and completely before starting column bearing replacement repair. Failure to follow this procedure correctly could result in personal injury and/or equipment damage.

Wear protective gloves prior to and during trimming and deburring of control board mount. Failure to do so can result in cuts from sharp edges.

Failure to keep the patient properly secured with the patient safety straps at all times could result in death or serious injury.

This Surgical Table is not to be used to transport patients. With exception of minor repositioning, as detailed in the operating instructions, never disengage floor locks when patient is on Table. Failure to heed this warning can result in injury to both the patient and the operating room staff.

The floor locks must be engaged at all times when a patient is on the Table. Failure to engage the floor locks before placing a patient on the Table or disengaging the floor locks while a patient is on the Table could result in the Table rolling unexpectedly during the procedure.

Keep hands and feet clear of the unloading platform and the Surgical Table base when unloading the table. Serious personal injury could result.

Do not exceed 350 lb (159 kg) on the leg section.

Dual-articulating headrest side rails support 100 ft-lb (135 N▪m) maximum. The headrest end rail supports 50 ft-lb (67 N▪m) maximum. Exceeding these limits could result in injury or equipment damage.

Do not remove table leg section if patient is not properly positioned. Patient's torso and buttocks must be firmly held in place by table back and seat sections and legs supported by leg supports.

1.7 Warning — Instability Hazard

WARNING

INSTABILITY HAZARD

Possible patient or user injury, as well as Surgical Table or accessory failure, may result from using STERIS table accessories for other than their stated purpose - or from using accessories manufactured and sold by other companies for use on STERIS surgical tables.

1.8 Warning — Pinching and Tipping Hazard

WARNING

PINCHING AND TIPPING HAZARD

Patient injury may result if the operator of this Surgical Table is not completely familiar with the controls for tabletop articulation and table operation. All users should carefully review the Operator Manual before operating the table and be familiar with the operation before use on Patients.

1.9 Warning — Personal Injury and/or Equipment Damage

WARNING

PERSONAL INJURY AND/OR EQUIPMENT DAMAGE HAZARD

Repairs and adjustments to this equipment must be made only by STERIS or STERIS-trained service personnel. Maintenance performed by unqualified personnel or installation of unauthorized parts could cause personal injury, result in improper equipment performance, invalidate the warranty, or result in costly damage. Contact STERIS regarding service options.

Regularly scheduled preventive maintenance is required for safe and reliable operation of this equipment. Contact STERIS to schedule preventive maintenance.

Do not service or perform maintenance on equipment while in use.

Surgical Table is factory set to operate at a certain voltage. Use of any other power supply could result in serious personal injury or table damage.

⚠ Failure to perform periodic inspections of this Surgical Table could result in serious personal injury or equipment damage.

⚠ The Auto Limit Sensors (ALS) System suggested alternative tabletop movement does not take into account the type of surgery that may be in process or the environment (e. g., other equipment close by) and might not be compatible with the surgical procedure. To avoid an action that could result in death or serious injury to the patient and the operating room staff, and/or serious equipment damage, completely evaluate the feasibility of the suggestion.

⚠ ALS System is not active during Backup Control. Ensure proper tabletop movements to prevent patient/staff injury and/or equipment damage.

⚠ During Backup Control, tabletop functions are available even if Surgical Table floor locks are NOT engaged. LOCK table before moving tabletop or transferring patient.

⚠ Use of accessories, transducers or cables with this Surgical Table, other than those specified, may result in increased emissions or decreased immunity of the table.

⚠ **Do not store items on Surgical Table base.** Doing so may result in equipment damage or inadvertent tabletop movement placing the patient and/or user at risk of injury.

⚠ Failure to keep all personnel and equipment clear of the Surgical Table before actuating any inertia-driven or power-driven movement could result in table damage and/or personal injury.

⚠ Hand Control must be attached to Surgical Table all times to enable safety stop and all modes of operation.

⚠ With patient in normal or reverse orientation, Surgical Table in Trendelenburg and slide at head limit, center tabletop before attempting to raise table to level or move into Reverse Trendelenburg.

Read and understand all instructions presented in this section before using the Universal Hand Control. Follow each step in the order presented in these instructions. If you need technical assistance or additional instructions, please contact STERIS.

Dual-articulating headrest side rails support 100 ft-lb (135 N▪m) maximum. The headrest end rail supports 50 ft-lb (67 N▪m) maximum. Exceeding these limits could result in injury or equipment damage.

Use care when separating the bearing assembly from each side of the Surgical Table as the sliding tabletop side member is now free-floating when the bearing assembly is removed. Avoid bumping or misaligning the side potentiometer pulley.

When the bearing assembly is removed from the Surgical Table, the seat section side member becomes free-floating. Be careful not to damage the slide potentiometer pulley that sits freely in the groove in the seat section side member.

To prevent column from falling, securely hold cover when removing the fastening screws.

Ensure tabletop is adequately supported.

Ensure tabletop is adequately supported before performing maintenance requiring tabletop to be maintained in the raised position.

Ensure tabletop is adequately supported. When Trendelenburg hydraulic cylinder is removed, tabletop is free to move.

Ensure tabletop is adequately supported. When tilt hydraulic cylinder is removed, tabletop is free to move.

Ensure tabletop is properly supported before removing tilt or Trendelenburg pivot screw. Removal of either pivot screw with an improperly supported tabletop could cause the table to drop, possibly resulting in injury and/or equipment damage.

Ensure tabletop is adequately supported. When hydraulic lines are disconnected from Main Hydraulic Valve Block, tabletop is free to move.

Lubrication makes the bearing rail assembly difficult to handle. Do not drop the assembly.

Use of this Surgical Table in the presence of flammable anesthetics could result in serious personal injury and/or table damage.

1.10 Warning — Infection Hazard

WARNING

INFECTION HAZARD

To protect against aerosols being reflected from contaminated surfaces, wear appropriate PPE, including, but not limited to, rubber or plastic gloves, masks, and eye protection and follow OSHA blood-borne pathogens standards when cleaning.

When cleaning/disinfecting Surgical Table, do not use alcohol which does not have sufficient cleaning/ disinfection properties.

Gloves and eye protection are required for repair procedures. Areas of the Surgical Table may have biohazard materials, so decontaminate before using tools, and note that the use of tools may dislodge this material onto clothing or face. Before loosening or hammering on a part, note if any biohazard material is present and take proper precautions.

1.11 Warning — Disposal Hazard

WARNING

DISPOSAL HAZARD

This product contains materials which may require disposal through appropriately licensed and permitted hazardous waste management firms.

1.12 Warning — Electric Shock Hazard

WARNING

ELECTRIC SHOCK HAZARD

To avoid the risk of electric shock, this equipment must only be connected to a supply mains with protective earth.

Unplug Surgical Table from Facility electrical supply and remove battery fuse before servicing. Always follow electrical safety-oriented work practice standards.

1.13 Caution — Possible Equipment Damage

CAUTION

POSSIBLE EQUIPMENT DAMAGE

When moving the Surgical Table to or from point of use, roll it carefully at moderate speed and only over smooth floors. Maximum floor clearance is 1/4" (6.4 mm). Avoid door and elevator jambs, and obstructions greater than 1/4" (6.4 mm). If necessary, lift table over obstructions, onto trucks, etc. Lift table evenly and only by the table base. DO NOT transport articles (including accessories) on top of the table, and **DO NOT use a forklift to move the uncrated table**.

Hang the hand control from side rail of the Surgical Table when not in use to avoid possible damage to the control.

When cleaning/disinfecting Surgical Table, thoroughly read the cleaning fluid directions for use and follow all directions and cautions as shown.

Do not spray cleaning fluid into electric receptacles and avoid spraying directly on emergency backup buttons or into clearance space. Spray or drippage may settle onto electric circuits inside table causing corrosion and loss of function.

Cleaning procedures requiring articulation of the Surgical Table should be performed only by persons familiar with table operation.

Route the hand control cord clear of any pinch points where cord could be damaged.

Use of incorrect hydraulic oil may severely damage the Surgical Table and/or cause malfunction. Contact STERIS for proper hydraulic oil.

After performing cleaning procedures, ensure pads, tabletop, and X-Ray tops are completely dry before reinstalling. Failure to do so can result in damage to tabletop and pads. Moisture trapped between pads and X-Ray tops may contribute to equipment damage, such as X-Ray top warpage.

Appropriate components of this Surgical Table have been tested and found in compliance with IEC 60601-1-2, Medical Electrical Equipment Part 1; General Requirements for Safety; Electromagnetic Compatibility (EMC). There is, however, a potential for electromagnetic or other interference between this equipment and other devices. Should user experience interference, relocate this device or minimize the use of the affected equipment while this device is in operation.

Surgical Table operation may be temporarily affected if portable or mobile RF communications equipment is used in close proximity.

Medical Electrical Equipment needs special precautions regarding EMC. Put Surgical Table into service according to the EMC information provided in this manual.

Possible EMC increased EMISSIONS or decreased IMMUNITY. Do not use accessories or replacement parts not listed in the Operator or Maintenance Manuals.

Surgical Table operation may be affected if used adjacent to or stacked with other equipment. If adjacent or stacked use is needed, ensure table operates properly in this configuration.

The emissions characteristics of this equipment make it suitable for use in industrial areas and hospitals (CISPR 11 Class A). If it is used in a residential environment (for which CISPR 11 Class B is required) this equipment might not offer adequate protection to radio frequency communication services. The user might need to take mitigation measures, such as relocating or re-orienting the equipment.

Failure to keep all personnel and equipment clear of the Surgical Table before actuating any inertia-driven or power-driven movement could result in table damage.

Do not pull the hand control cord when disconnecting hand control from Surgical Table. This can result in damage to the hand control.

Static electricity can damage microprocessor controls. Indiscriminate probing of circuits or improper connections may result in immediate or delayed electrical failure. If the electronics are to accessed, use a personal grounding device. Exercise care in all activities involving the electronic circuitry.

Do not remove the bearing cartridges from the bearing rail. Damage may result to the cartridge and/or loss of the ball bearings upon reinsertion into the cartridges.

Isolate the coil and/or pump motor from the control by disconnecting the wires on the motor terminal board, or slip the wires off the solenoid coil.

Use care when separating the bearing assembly from each side of the Surgical Table as the sliding tabletop side member is now free-floating when the bearing assembly is removed. Avoid bumping or misaligning the slide potentiometer pulley.

When the bearing assembly is removed from the Surgical Table, the seat section side member becomes freefloating. Be careful not to damage the slide potentiometer pulley that sits freely in the groove in the seat section side member.

Always remove power from Surgical Table when moving control assembly to prevent any electrical shorting. Use of a strap to help hold control assembly out of the way is recommended.

Use of heat in vicinity of control and hydraulics is a concern. A piece of sheet metal should be used to shield these components from excess heat.

Glossary

2.1 Terms and Definitions

Accessories — Optional surgical procedure devices attaching to the Surgical Table usually at the Side Rails.

ABS — Acrylonitrile Butadiene Styrene.

ALS System — Auto Limit Sensor™ control device (using Intelligent Limit Sensors) provides instant user feedback on conflicting Tabletop articulations and how to resolve the conflict when the Surgical Table is positioned in standard configuration.

Auxiliary Control System — Actuated at any time to allow Surgical Table operation in the event of primary control or power malfunction. A pedal (foot pump to provide hydraulic power) and Backup Hand Control comprise this system. The foot pedal is located at the side of the Table Base.

Backup (Override) Hand Control — Located on patient right side behind a cover plate and stored in the Table Base.

Electrohydraulic — Combination of electric and hydraulic mechanisms.

FIT Pads — Foam Immersion Technology™ Surgical Table Pads.

Flex — Tabletop position where back section moves down and Tabletop moves into Reverse Trendelenburg.

Foot Control — Physician control of Surgical Table using foot pedals. Hand Control selections override Foot Control selections.

Floor Locks — Hydraulically operated Surgical Table locking system located in the Surgical Table base.

Hand Control — Constructed of one-piece thermoformed plastic, is the primary interface for Surgical Table operation. Hand Control is equipped with a 12' (3.7 m) extended long detachable cord. The Hand Control plugs into a receptacle located at the top of the Table Column. Membrane touch switches provide, through an auxiliary CPU, input signals to activate table functions and articulations.

HMI — Human Machine Interface (such as Hand, Foot, or Auxiliary Control).

I/O — Input/Output.

LCD Display — Hand Control Liquid Crystal Display indicating Surgical Table status, Tabletop positioning, and control system messages to user.

LED — Light Emitting Diode.

Normal Patient Positioning — Patient is positioned on Surgical Table with head on head section.

Pinch Point — During patient positioning or Tabletop movement where a potential exists for pinching a hand or foot of the patient or healthcare professional using the Surgical Table.

Power Panel — Located at head-end of the Table Base. Contains main power switch, primary fuses, ac receptacle for power cord, INTELLIPOWER® display, and ground equalization terminal (male connection).

Reflex —Tabletop position where back section moves up and Tabletop moves into Trendelenburg position.

Reverse Orientation — Touch pad on Hand Control. Press this touch pad to change patient orientation (NORMAL or REVERSE). Yellow LED indicates patient in reverse orientation; Green LED indicates patient in normal orientation.

Reverse Patient Positioning —Head section is secured to end of leg section. Patient is positioned on Surgical Table with head on head section.

Reverse Trendelenburg — Lowering of Tabletop leg or foot section toward the floor.

Side Rail — Stainless-Steel rail attached to both sides of Surgical Table Tabletop.

Surgical Table — STERIS 4085 General Surgical Table or STERIS 4095 General Surgical Table.

Table Base — Painted welded steel covered by stainless-steel or plastic enclosure. Base contains casters, floor locks, power assembly, Backup (Override) Hand Control, and hydraulic fluid.

Table Column — Supports Tabletop and includes master computer, lift cylinders, bearings, hydraulic piping, Trendelenburg hydraulic actuators, and wiring. Covered and protected by four two-piece stainless-steel or plastic shrouds.

Tabletop — Four section (head, back, seat, and leg) interlocking top supported by the Table Column and mobile Table Base.

Tilt — Lateral Tilt, movement of the Tabletop laterally.

TLT Pads — Tri-Layer Technology Surgical Table Pads.

Trendelenburg — Lowering of Tabletop head section toward the floor.

2.2 Definition of Symbols on Table

The following is a key to symbols on the Surgical Table.

	Protective Earth (Ground)
	Attention, Consult Manual for Further Instructions
	Equipotentiality
	Electric Shock Hazard
	Type B Equipment
	Safety Warning
IPX4	Splash Proof Equipment
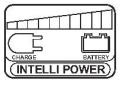	INTELLIPOWER® Dual Power System Power Panel (Battery Charge/Discharge Status)

	Powered By Battery
A	Amperage Rating of the Surgical Table
V	Voltage Rating of the Surgical Table
~	Alternating Current
k W	Power Rating of the Surgical Table
Hz	Frequency of the Surgical Table
	Equipment or Reorder Number
	Medical Device
	Unique Device Identifier
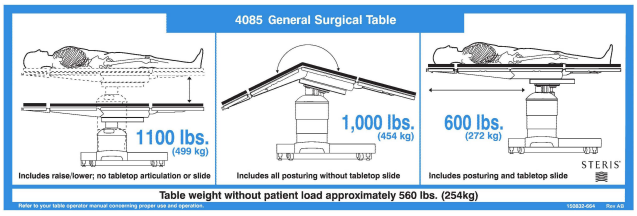	Weight Limit Labeling (4085)
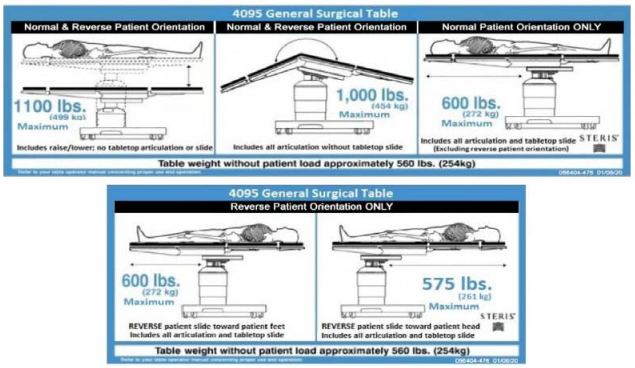	Weight Limit Labeling (4095)

2.3 Hand Control Symbols

This section identifies the iconic hand control buttons and the symbols which can present themselves on the control LCD Display.

Table 2-1. Definition of Symbols on Primary Hand Control (STERIS 4085 General Surgical Table)

Symbol	Definition
	Move Tabletop to Level
	Patient Orientation on Surgical Table (Reverse/Normal)
	Stop All Table Articulation
	Tilt Tabletop Left
	Tilt Tabletop Right
	Tabletop Up (Height Up; Raise)
	Tabletop Down (Height Up; Lower)
	Move Tabletop into Trendelenburg
	Move Tabletop into Reverse Trendelenburg
	Floor Lock Function (Refer to **Hand Control LCD Display Screen Icons** for Further Information)
	Slide Tabletop Toward Head End (SLIDE HEAD)
	Slide Tabletop Toward Foot End (SLIDE FOOT)

Table 2-2. Definition of Symbols on Universal Hand Control (STERIS 4095 General Surgical Table)

Symbol	Color	Definition
	Green	SLIDE: Slide Tabletop Toward Head End (SLIDE HEAD) **NOTE:** Also used to indicate YES when prompted to change Compatibility Mode.
	Green	SLIDE: Slide Tabletop Toward Foot End (SLIDE FOOT) **NOTE:** Also used to indicate NO when prompted to change Compatibility Mode.
	Light Purple	HEIGHT: Tabletop Up (HEIGHT UP; Raise)
	Light Purple	HEIGHT: Tabletop Down (HEIGHT DN; Lower)
	Black	BACK: Tabletop Back Section Up (BACK UP)
	Black	BACK: Tabletop Back Section Down (BACK DN)
	Blue	LEG: Tabletop Leg Section Up (LEG UP)
	Blue	LEG: Tabletop Leg Section Down (LEG DN)
	Orange	TRENDELENBURG: Move Tabletop into Trendelenburg (TREND)
	Orange	TRENDELENBURG: Move Tabletop into Reverse Trendelenburg (REVERSE TREND)
	Black	TILT: Tilt Tabletop Right (TILT RIGHT)
	Black	TILT: Tilt Tabletop Left (TILT LEFT)

Table 2-2. Definition of Symbols on Universal Hand Control (STERIS 4095 General Surgical Table) (continued)

Symbol	Color	Definition
	Black	FLEX: Move Tabletop into Flex Position
	Black	REFLEX: Move Tabletop into Reflex Position
	Black	KIDNEY: Tabletop Kidney Section Up (KIDNEY UP)
	Black	KIDNEY: Tabletop Kidney Section Down (KIDNEY DN)
	Blue	POSITIONING: Patient Positioning on Tabletop, NORMAL or REVERSE
	Blue	FLOOR LOCK: Floor Lock Function (Refer to **Universal Hand Control LCD Display Icons** for Further Information)
	Blue	LEVEL: Move Tabletop to Level position
	Red	STOP: Stop All Table Articulation

Table 2-3. Definition of Hand Control LCD Display Icons (STERIS 4085 General Surgical Table)

Symbol	Definition
	Table Powered by Facility Power (Green = Normal Condition; Red = Fault Condition)
	Table Powered by Battery Power [Green (Solid Icon) = Battery Fully Charged; Orange/Yellow (Half-Filled/- Solid Icon) = Battery at Half Charge; Red/Yellow (Solid Icon With Yellow !) = Battery Empty (Table Will Soon Stop Functioning)]
	Floor Locks Engaged (Green)
	Floor Locks Unlocked (Orange)

Table 2-3. Definition of Hand Control LCD Display Icons (STERIS 4085 General Surgical Table) (continued)

Symbol	Definition
	ALS Notification (ICON and Text)
	Maintenance Notification (Orange)
	Kidney Bridge (Blue)
	Keypress (Green)
	Slide in Head Direction (Blue)
	Slide in Foot Direction (Blue)
	Slide Displayed in Inches (Blue)
	Slide Displayed in Centimeters (Blue)

Table 2-4. Definition of Universal Hand Control LCD Display Icons (STERIS 4095 General Surgical Table)

Symbol	Color	Definition
	Green	POWER: Table is connected to facility power
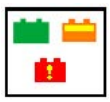	Green Orange/Yellow Red/Yellow	POWER: Table Powered by Battery Power — Green (Solid Icon) = Battery Fully Charged Orange/Yellow (Half-Filled/- Solid Icon) = Battery at Half Charge Red/Yellow (Solid Icon With Yellow !) = Battery Empty (Table Will Soon Stop Functioning)]
	Green	FLOOR LOCK STATUS: Floor locks are engaged
	Orange	FLOOR LOCK STATUS: Floor locks are not engaged
	Orange	MAINTENANCE: Surgical table has detected a condition requiring Service
	Blue/Yellow symbol with Orange text	AUTO LIMIT SENSOR (ALS): ALS sensors activating to prevent table collision with obstacle

Table 2-4. Definition of Universal Hand Control LCD Display Icons (STERIS 4095 General Surgical Table) (continued)

Symbol	Color	Definition
	Blue	KIDNEY BRIDGE: Bridge is extended.
	Blue	HEAD/FOOT: Slide is positioned toward patient s head
	Blue	HEAD/FOOT: Slide is positioned toward patient s foot
	Green	KEY PRESS: Key has been pressed on Universal Hand Control
	Cyan	REFER TO INSTRUCTIONS: Reminds user to refer to supplied Operator Manual
	Blue	INCHES: Indicates slide position readout is displayed in inches
	Blue	CENTIMETER: Indicates slide position readout is displayed in centimeters
	Blue	POINTER: Indicates button user needs to push when selecting compatibility mode



Figure 2-1. Primary Hand Control (Original Hand Control for 4085 Surgical Tables)



Figure 2-2. Universal Hand Control

Important User Information

3.1 Introduction

IMPORTANT: *This Surgical Table is only to be operated by users who have successfully been trained on its operation. Please contact STERIS for the required in-service and training.*

The product literature included in this section contains data relating to the principal characteristics of the Surgical Table and basic patient positioning.

The literature is informative rather than instructional. It provides and conveys, through text and illustrations, a general concept of the equipment, its purpose, limitations, and technical applications.

3.2 General Description

CAUTION

POSSIBLE EQUIPMENT DAMAGE

Appropriate components of this Surgical Table have been tested and found in compliance with IEC 60601-1-2, Medical Electrical Equipment Part 1; General Requirements for Safety; Electromagnetic Compatibility (EMC). There is, however, a potential for electromagnetic or other interference between this equipment and other devices. Should user experience interference, relocate this device or minimize the use of the affected equipment while this device is in operation.

The mobile and electro-hydraulically operated Surgical Table (see *Figure 3-1*) is specifically designed to provide the complete tabletop articulation flexibility required for modern surgical care facilities. It features powered lateral tilt, Trendelenburg/Reverse Trendelenburg, and adjustable height functions.

Additional features include:

- **1100 lb (499 kg) Load, Normal and Reverse Patient Position; without tabletop articulation (no tabletop articulation or slide).**
- **1000 lb (454 kg) Load, Normal and Reverse Patient Position; includes all tabletop articulation except tabletop slide.**
- **600 lb (272 kg) Load, Normal Patient Position; includes all tabletop articulation and full tabletop slide (also includes Reverse patient slide toward patient feet but not patient slide toward patient head).**
- **575 lb (260 kg) Load, Normal and Reverse Patient ; includes all tabletop articulation and full tabletop slide (including reverse patient slide toward patient feet and toward patient head).**
- **constructed of aluminum alloy, stainless steel and other high quality materials.**
- **equipped with a large sliding tabletop providing unrestricted radiological access without patient reversing.**
- **powered by either internal battery or facility electric through use of the patent-pending INTELLIPOWER® dual power system.**

The table accepts positioning commands from three sources

1. **A Primary Hand Control or Universal Hand Control.**
2. **An optional physician-controlled Foot Control (which includes Trendelenburg Tilts, Lateral Tilts, and Height functions).**
3. **An Auxiliary Control System permits table operation in the event of primary control malfunction.**

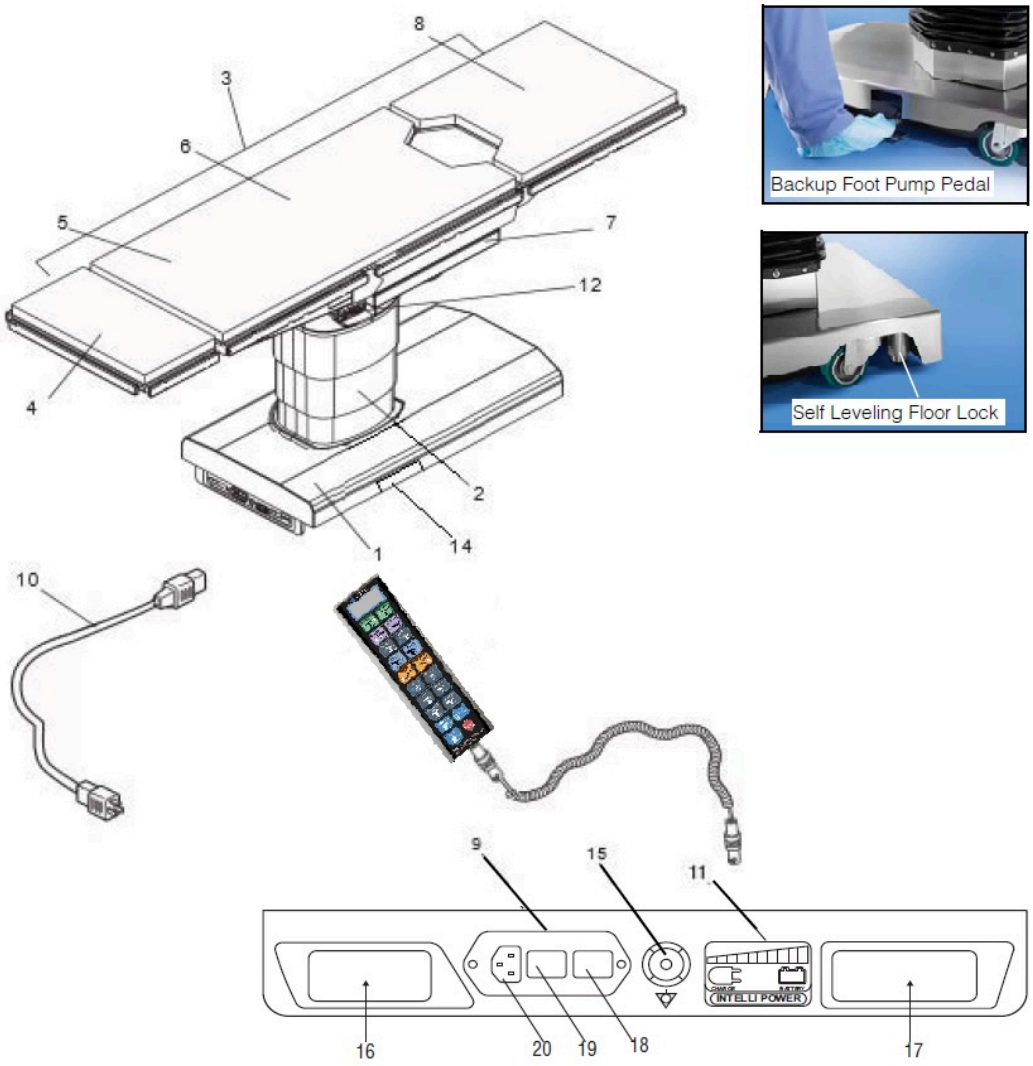

KEY:

1. **Table Base**
2. **Column**
3. **Tabletop**
4. **Head Rest (Standard or Dual-Articulating)**
5. **Back Section**
6. **Kidney Elevator Mechanism**
7. **Seat Section (Sliding)**
8. **Leg Section**
9. **Power Panel**
10. **Power Cord**
11. **INTELLIPOWER Dual Power System Display**

12. **Connection Panel**
13. **Hand Control**
14. **Auxiliary Control System**
15. **Ground Equalization Terminal (Male Connection)**
16. **Service Label**
17. **Service Bar Code Label**
18. **Primary Fuses**
19. **Main Power Switch**
20. **AC Receptacle**

Figure 3-1. Table Components (Typical)

3.3 Technical Specifications

This section includes the following:

Essential Performance
Overall Size (W x L x H)
Weight
Line Power Input
Environmental Conditions
Transportation/Storage Conditions
Image Amplification Coverage
Range of Motion
EMC/High-Frequency Interference

Essential Performance

Essential Performance for Surgical Table:

1. **Support a patient without unwanted movement under single fault conditions.**
2. **Single fault conditions can include electrical, electromagnetic effects, or mechanical problems.**
3. **In extreme cases of electromagnetic interference, operator may experience temporary loss of table function. This situation can be corrected by removing source of interference and power cycling Surgical Table if necessary.**

Overall Size (W x L x H)

22 x 81 x 26 to 45" (550 x 2055 x 675 to 1136 mm)

See *Figure 3-2* and *Figure 3-3*.

NOTE: SAE measurements are approximate based on metric dimensions.

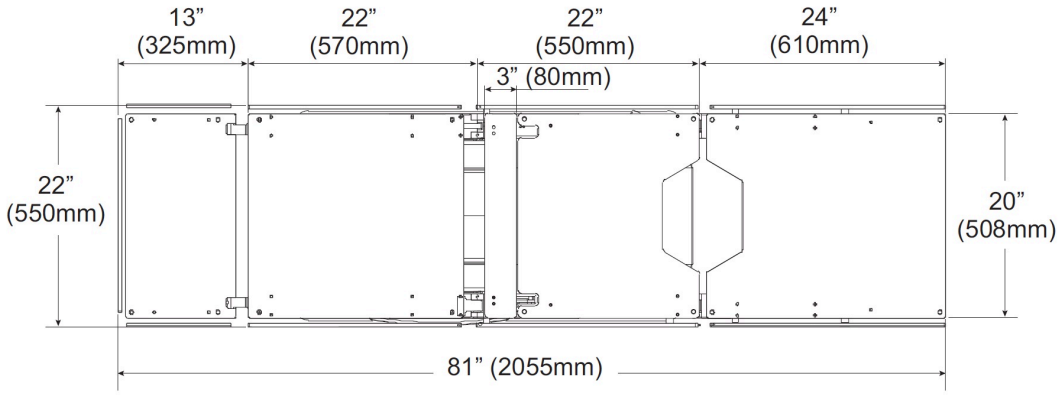

Figure 3-2. Tabletop Dimensions (Typical)

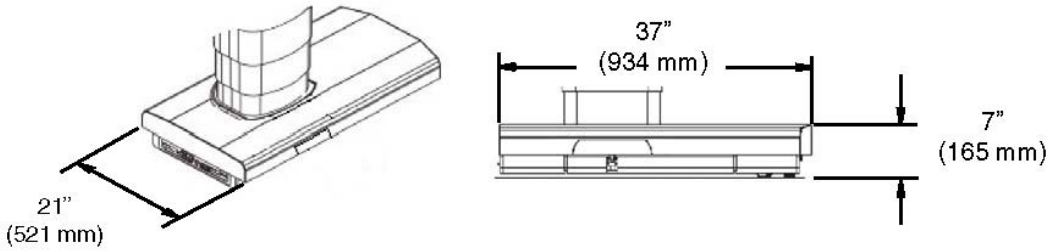

Figure 3-3. Base Dimensions (Typical)

Weight

Table: Approximately 560 lb (250 kg)

Line Power Input

100-240 Vac, One-Phase, 50/60 Hz, 4.0 Amp

Each table is shipped from the factory configured to the electrical requirement specified on the factory order. If this electrical configuration needs to be changed in the field, consult STERIS for the needed procedure and required materials.

Environmental Conditions

Temperature: 63 - 77 °F (17-25 °C)

Relative Humidity: 20 - 80% RH

Atmospheric Pressure: 700 - 1060 hPa

Transportation/Storage Conditions

Ambient Temperature: -40 - 158 °F (-40 - 70 °C); Not to exceed 15 weeks.

Relative Humidity: 10-100% non-condensing

Atmospheric Pressure: 500-1060 hPa

Image Amplification Coverage

Image amplification coverage is represented in a dimensional drawing (see *Figure 3-4*).

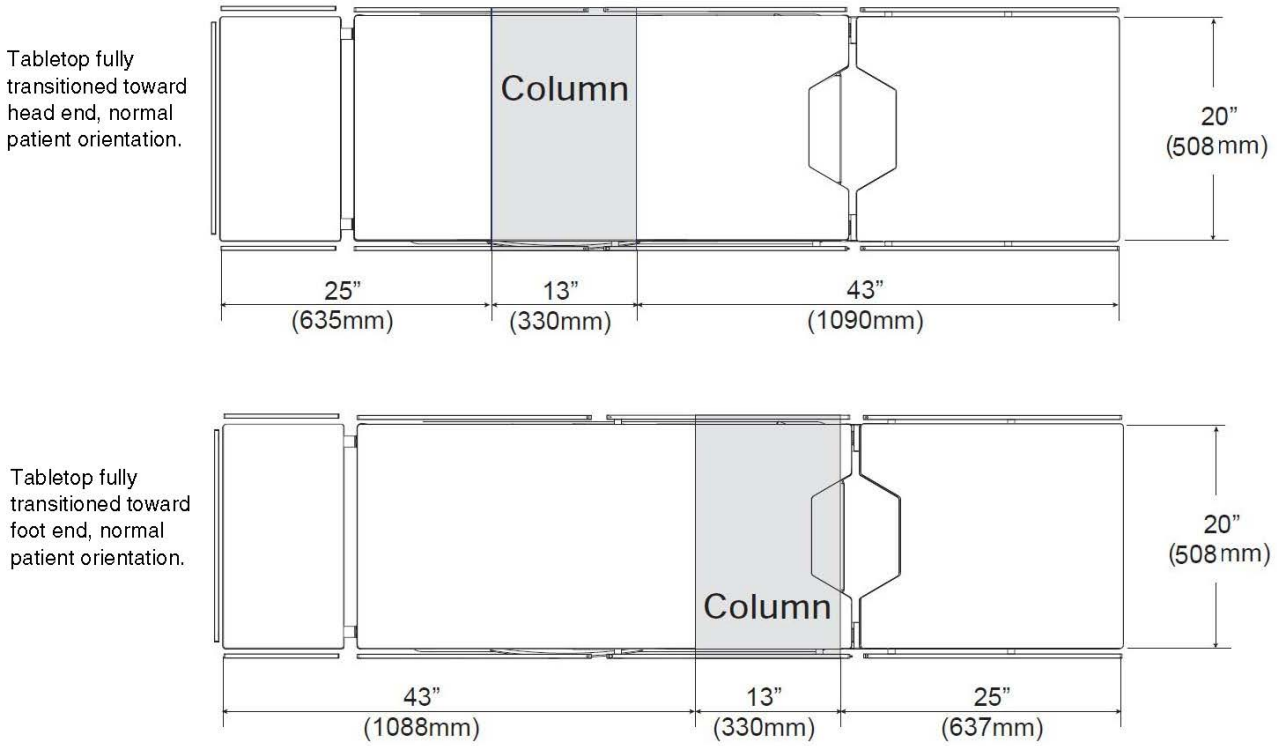

Figure 3-4. Image Amplification Coverage

Range of Motion

Height: 26 to 45" (675 to 1136 mm)
Trendelenburg Range: 30° ±1°
Reverse Trendelenburg Range: 30° ±1°
Lateral Tilt Range: 20° ±1°
Slide Motion: HEAD: 9" (227 mm); FOOT: 9" (227 mm)*
Back Section Motion: UP: 80° ±1°; DOWN: 40° ±1°
Leg Motion: UP: 0° ; DOWN: 105° ±1°
Kidney Elevator Mechanism: 4" (110 mm)*
Flex/Reflex: 140° ±1° / 100° ±1°
Head Motion (Manual): 90° ±1°

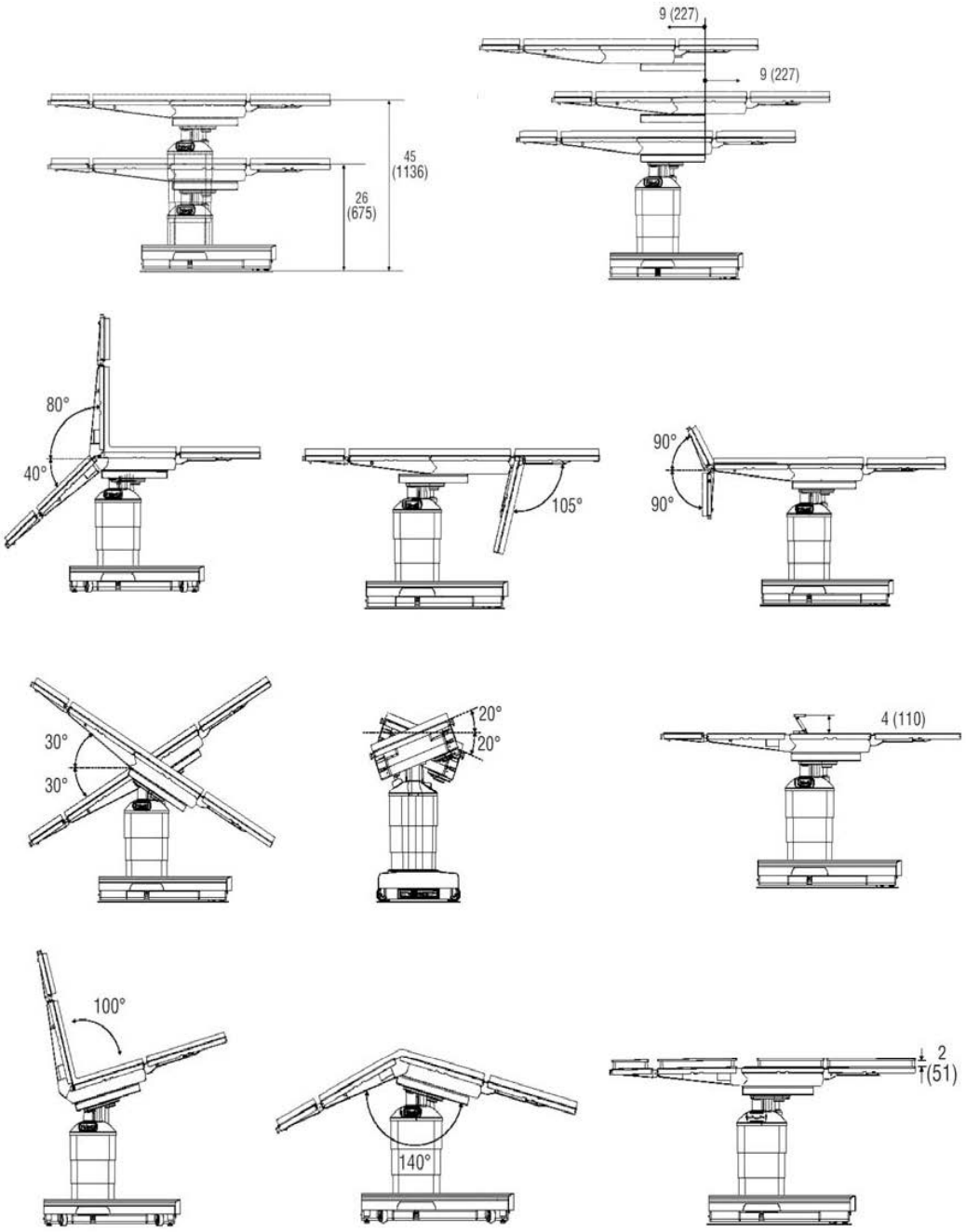

Figure 3-5. Table Articulation

EMC/High-Frequency Interference

WARNING

PERSONAL INJURY AND/OR EQUIPMENT DAMAGE HAZARD

Use of accessories, transducers or cables with this Surgical Table, other than those specified, may result in increased emissions or decreased immunity of the table.

CAUTION

POSSIBLE EQUIPMENT DAMAGE

Appropriate components of this Surgical Table have been tested and found in compliance with IEC 60601-1-2, Medical Electrical Equipment Part 1; General Requirements for Safety; Electromagnetic Compatibility (EMC). There is, however, a potential for electromagnetic or other interference between this equipment and other devices. Should user experience interference, relocate this device or minimize the use of the affected equipment while this device is in operation.

Medical Electrical Equipment needs special precautions regarding EMC. Put Surgical Table into service according to the EMC information provided in this manual.

Possible EMC increased EMISSIONS or decreased IMMUNITY. Do not use accessories or replacement parts not listed in the Operator or Maintenance Manuals.

The emissions characteristics of this equipment make it suitable for use in industrial areas and hospitals (CISPR 11 Class A). If it is used in a residential environment (for which CISPR 11 Class B is required) this equipment might not offer adequate protection to radio frequency communication services. The user might need to take mitigation measures, such as relocating or re-orienting the equipment.

Note the following:

- **Medical Electrical Equipment needs special precautions regarding EMC and needs installed and put into service according to the EMC information provided in this manual.**
- **Portable and mobile RF communications equipment can affect Medical Electrical Equipment.**
- **For Table control via e-Serve (RS-232) connection, note the Table has been tested for EMC compliance using a 6 (2 m) long, shielded serial cable. A longer or unshielded cable could cause problems and must be observed to verify normal operation.**
- **The use of accessories, transducers and cables other than those specified by the manufacturer, may result in increased emissions or decreased immunity of this Surgical Table.**
- **The Surgical Table should not be used adjacent to or stacked with other equipment. If so, table should be observed to verify normal operation.**
- **Medical Electrical Equipment needs special precautions regarding high frequency interference. Equipment needs installed and put into service according to Facility regulations and procedures.**
- **Potential hazards from the interfering high-frequency device could be patient burns and/or electrical shock of patient and operator.**
- **Potential explosion hazards caused by the interfering high-frequency device because this Surgical Table is not suitable for use in the presence of a flammable anesthetic mixture with air or oxygen or nitrous oxide.**

3.4 Tabletop Articulation and Patient Positioning

IMPORTANT: *A listing of the Safety Precautions to be observed when operating and servicing this Surgical Table can be found in* ***Safety Precautions and Pinch Points*** *of this manual. Do not operate or service the equipment until you have been trained on this information.*

This section includes the following:

Tabletop Articulation and Weight Limitation

Positioning Patient on Table

Patient Safety Straps

Table Repositioning With Patient Aboard (Not Transport)

Tabletop Articulation and Weight Limitation

WARNING

TIPPING HAZARD

⚠ Do not place patient on this Surgical Table unless floor locks are engaged.

⚠ This Surgical Table is not to be used to transport patients. With exception of slight repositioning, as detailed in the operating instructions, never disengage floor locks when patient is on table. Failure to heed this warning can result in injury to both the patient and the operating room staff.

⚠ Do not use this Surgical Table for patients exceeding the maximum patient weight of:

- **1100 lb (499 kg)** Load, **Normal** and **Reverse** Patient Position; raise or lower only (no tabletop articulation or slide).
- **1000 lb (454 kg)** Load, **Normal** and **Reverse** Patient Position; raise or lower; includes all tabletop articulation except tabletop slide.
- **600 lb (272 kg)** Load, **Normal** Patient Position; raise or lower; includes all tabletop articulation and full tabletop slide (also includes **Reverse** patient slide toward patient feet but not patient slide toward patient head).
- **575 lb (260 kg)** Load, **Normal** and **Reverse** Patient; raise or lower; includes all tabletop articulation and full tabletop slide, including **Reverse** patient slide toward patient feet and toward patient head.

⚠ Center tabletop over column before applying chest compressions.

⚠ Center tabletop over column before transferring patient on or off of Surgical Table.

WARNING

PERSONAL INJURY HAZARD

This Surgical Table is not to be used to transport patients. With exception of slight repositioning, as detailed in the operating instructions, never disengage floor locks when patient is on table. Failure to heed this warning can result in injury to both the patient and the operating room staff.

Healthcare professionals must ensure patients are positioned and monitored so as to prevent compromising respiration, nerve pathways or circulation.

Do not exceed 350 lb (159 kg) on the leg section.

Dual-articulating headrest side rails support 100 ft-lb (135 N▪m) maximum. The headrest end rail supports 50 ft-lb (67 N▪m) maximum. Exceeding these limits could result in injury or equipment damage.

NOTE: Accessories may have a specified weight limitation that is less than that of the Surgical Table. Do not exceed the lowest weight limit, table or accessory.

Do not exceed the maximum patient weights specified in the Safety Precautions and Pinch Points section

Positioning Patient on Table

1. **Always check patient stability when patient is positioned.**
2. **Do not place patient on this Surgical Table unless floor locks are engaged.**
3. **Use extreme care when transferring patients to or from table.**
4. **Ensure all accessories are properly installed and secured.**
5. **Check for and eliminate harmful patient pressure points once patient is positioned.**
6. **Have a qualified medical professional monitor patient during surgery for all possible tabletop articulation hazards.**
7. **Do not exceed 350 lb (159 kg) on the Leg Section. Leg Section is not designed to support full body weight.**
8. **Dual-articulating headrest side rails support 100 ft-lb (135N▪m) maximum. The headrest end rail supports 50 ft-lb (67 N▪m) maximum. Exceeding these limits could result in injury or possible equipment damage.**

   IMPORTANT: All patients must be restrained for proper safety regardless of the length or type of procedure.

   NOTE: STERIS recommends only using STERIS manufactured or distributed accessories with this table. Use of accessories not manufactured or approved by STERIS may not be compatible with this table and could result in injuries or equipment damage.

Patient Safety Straps

WARNING

PERSONAL INJURY HAZARD

Failure to keep the patient properly secured with the patient safety straps at all times could result in death or serious injury.

Adjust the patient safety straps such that they restrain the patient according to currently accepted patient restraining practices, keeping in mind the Trendelenburg/Reverse Trendelenburg, back, lateral tilt and height adjustment.

Table Repositioning With Patient Aboard (Not Transport)

If this Surgical Table needs to be repositioned within the operating room with the patient aboard, utilize the following procedure:

1. **Ensure patient is properly secured.**
2. **Center and level tabletop with patient over column.**
3. **Lower tabletop to lowest possible height.**
4. **Ensure table path is clear of obstructions.**
5. **One person must be at each end of tabletop.**
6. **Release floor locks.**
7. **If the table is moved with the patient aboard, apply only lateral force to reposition table.**
8. **DO NOT push down on or lift tabletop while repositioning table.**
9. **Once table is repositioned, lock table by engaging all floor locks.**

Before Using the Table

4.1 Introduction

IMPORTANT: *A listing of the Safety Precautions to be observed when operating and servicing this Surgical Table can be found in* ***Safety Precautions and Pinch Points*** *of this manual. Do not operate or service the equipment until you have been trained on this information.*

Use the following information to install Surgical Table fuses, connecting to Facility power, and installing controls and table sections.

4.2 Installation

This section includes the following:

Introduction

Grounding

Positioning the Table

Installing Battery Fuse (F8)

Installing Main Control Fuses (F6 and F7)

Connecting Table to Facility Power

Connecting Universal Hand Control

Connecting Optional Foot Control

Installing/Removing Table Pads

Installing/Removing X-Ray Top

Accessories/Side Rails

Introduction

WARNING

PERSONAL INJURY AND/OR EQUIPMENT DAMAGE HAZARD



Repairs and adjustments to this equipment must be made only by STERIS or STERIS-trained service personnel. Maintenance performed by unqualified personnel or installation of unauthorized parts could cause personal injury, result in improper equipment performance, invalidate the warranty, or result in costly damage. Contact STERIS regarding service options.

Check the overall condition of the Surgical Table and all applicable accessories/options upon receipt to ensure nothing was damaged during shipment. If damage appears to have occurred, contact the shipping company and STERIS.

STERIS recommends that only STERIS-trained or STERIS-supervised personnel attempt to uncrate/crate, install and perform maintenance on the surgical table. Uncrating, crating, installation, or maintenance by others may result in personal injury or damage to the product.

Grounding

A patient grounding post/potential equalization terminal (male connector, DIN 42801) is provided. The mating female connector for patient grounding **is not furnished by STERIS**.

Positioning the Table

WARNING

PERSONAL INJURY HAZARD

If an antistatic path is necessary, STERIS recommends the use of antistatic pads (specifically developed for this table) in direct contact with the patient. Table must also be positioned on antistatic floor or connected to equalization device (equipotential connector).

Position Surgical Table at desired location, ensuring that the Facility electrical outlet is marked for the applicable power system in the range of 100-240 Vac. See *Connecting Table to Facility Power*.

Note that the power cord is approximately 18 ft (5.5 m) long.

NOTE: The table is equipped with INTELLIPOWER® dual power system modes, enabling operation from connection to either AC power or on its own battery power.

Installing Battery Fuse (F8)

If not installed, install 16A battery fuse (F8; available in fuse set 342212555) into Surgical Table base as follows (see *Figure 4-1*):

1. **Locate correct battery fuse.**
2. **At foot-end of table base, unscrew and remove black fuse cap.**
3. **Insert fuse in cap.**
4. **Insert fuse (with cap) into fuse holder assembly in table base.**
5. **Push in fuse and cap and turn a quarter turn to lock assembly into table base.**

NOTE: If Surgical Table is going to be stored for more than six months, remove fuse to limit battery discharge.

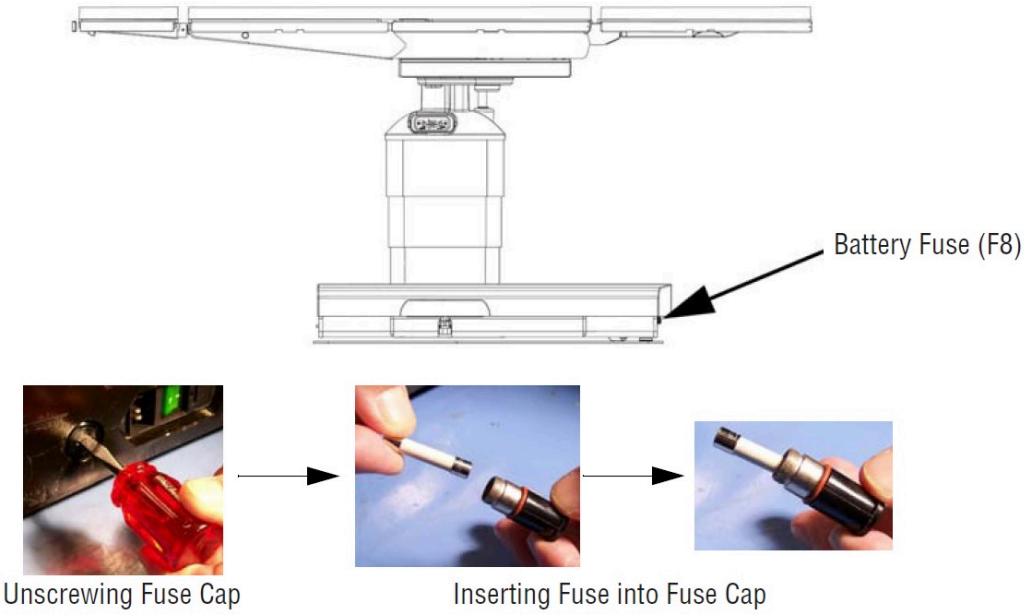

Figure 4-1. Installing or Replacing Fuses

Installing Main Control Fuses (F6 and F7)

If not installed, install two 4 Amp main control fuses (F6 and F7; 639600038) into head-end of Surgical Table base as follows (see *Figure 4-2*):

1. **Locate F6 and F7, 4 Amp, in a cartridge beside the ac input at head-end of table base.**
2. **Turn power OFF.**
3. **Disconnect ac power cord from Facility power.**
4. **Pry cartridge out with a small screwdriver to access fuses.**
5. **Remove blown fuse(s) and replace.**
6. **Push cartridge back into connected position.**
7. **Remove battery fuse at foot-end of table base.**
8. **Reconnect ac power cord to wall receptacle.**
9. **Turn power ON.**
10. **Verify INTELLIPOWER dual power system indicates table is operating on ac power (green LED must be ON).**
11. **Ensure table functions properly.**
12. **Return battery fuse.**

NOTE: If Surgical Table is going to be stored for more than six months, remove fuse to limit battery discharge.

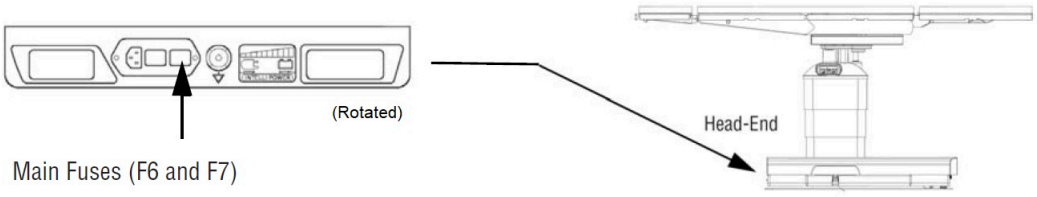

Figure 4-2. Installing or Replacing Main Fuses (F6 and F7)

Connecting Table to Facility Power

Required line power for Surgical Table is 100-240 Vac, single-phase, 50/60 Hz, 4.0 Amp.

Each table is shipped from the factory configured to the electrical requirement specified on the factory order. If this electrical configuration needs to be changed in the field, consult STERIS for the needed procedure and required materials.

NOTE: Before connecting the table to your ac power system, ensure table is marked for your power system (100, 120, 220, or 230/240 Vac).

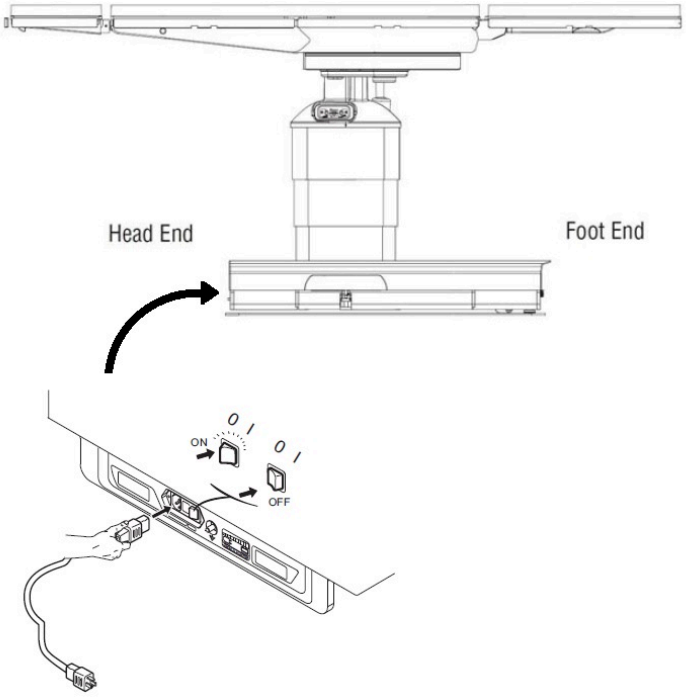

Figure 4-3. Connecting Table to Facility Power (Typical)

1. **Route power cord to prevent tripping hazard.**
2. **Plug power cord into appropriate socket on table base (see *Figure 4-3*).**
3. **Plug power cord into appropriate facility outlet.**

   NOTE: When integrity of external protective earth conductor arrangement is in doubt, use battery power only.
4. **Turn Main Power Switch to ON.**
5. **Switch turns Green and plug symbol on INTELLIPOWER® LED Display lights.**

NOTE: A green Main Power Switch indicates facility power is available to the Surgical Table. A lighted plug symbol on the LED Display indicates the batteries are charging. Refer to *Section 7.4, Battery Charging*.

Connecting Universal Hand Control

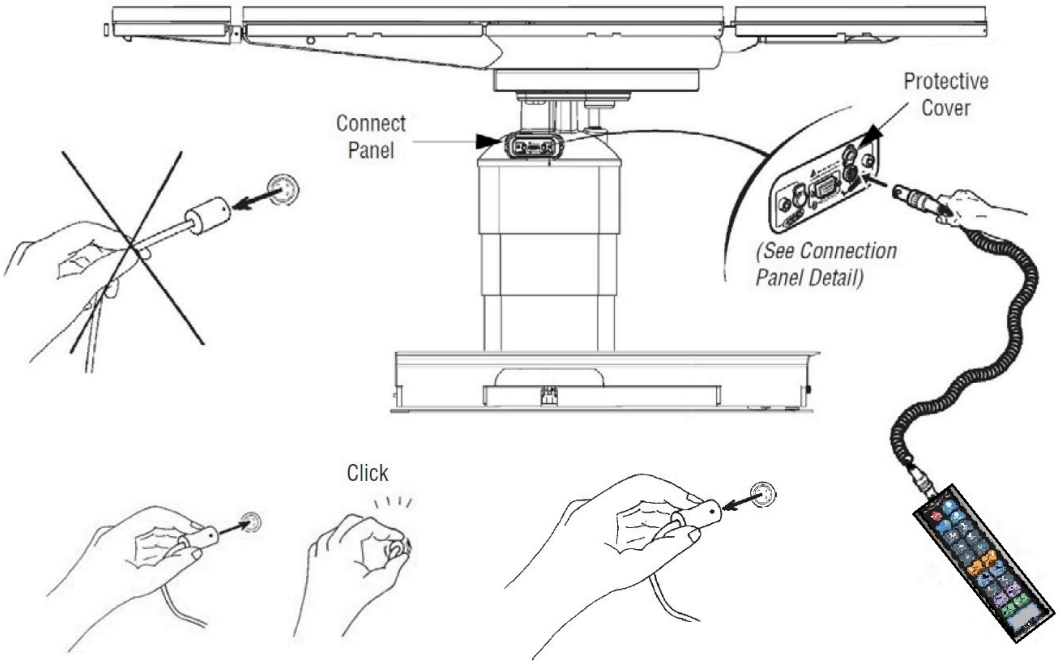

Figure 4-4. Connecting Universal Hand Control

For the following steps, refer to *Figure 4-4* and *Figure 4-5* as needed.

1. **Remove Universal Hand Control from package.**
2. **Lift hinged plastic protective cover for handle connection socket.**
3. **Align red mark (or arrow) on hand control plug with red mark on connection socket.**

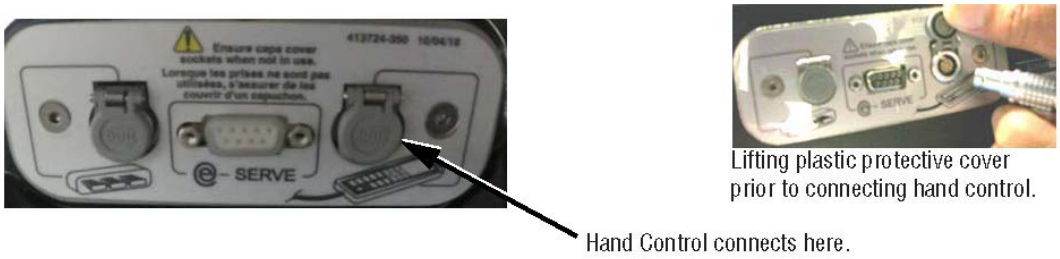

Figure 4-5. Hand Control, Connection Detail

4. **Push hand control plug into table socket until a "click" is heard.**
5. **With the table at the precise location, use the Floor Lock button (on the hand control) to lock the table in place. (If needed, refer to *Section 5.2, Universal Hand Control*).**
6. **Place hand control on table side rail.**

Connecting Optional Foot Control

The optional foot control allows operator to control HEIGHT, TREND and TILT movements.

Install the option as follows, referring to*Figure 4-6* and*Figure 4-7* as needed.

1. **Remove foot control from package.**
2. **Lift hinged plastic protective cover for foot control connection socket.**
3. **Align red mark (or arrow) on foot control plug with red mark on associated connection socket.**
4. **Push foot control plug into table socket until a "click" is heard.**
5. **Place foot control where it cannot be damaged.**

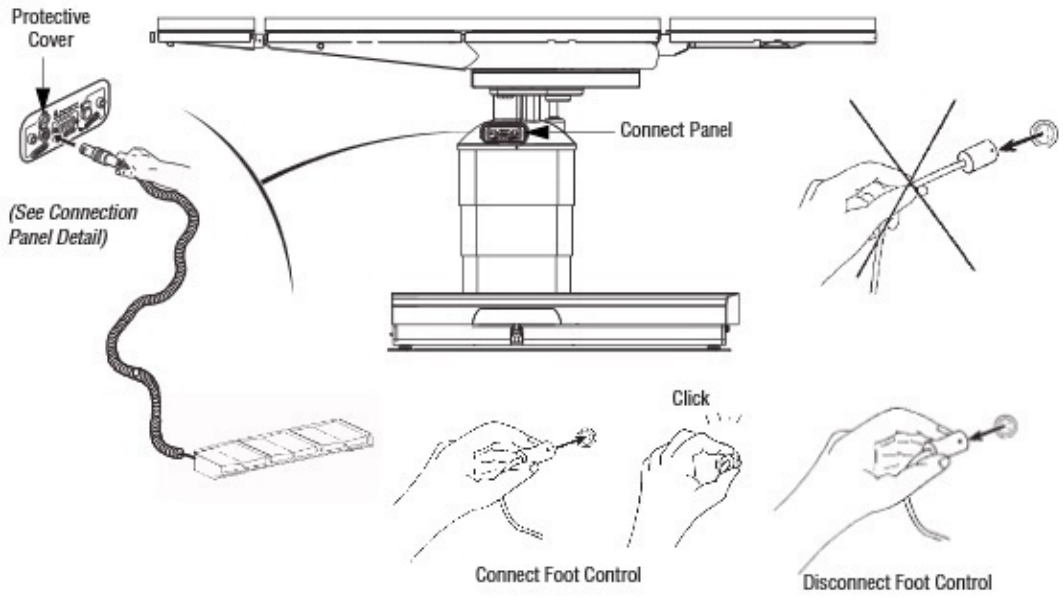

Figure 4-6. Connecting Optional Foot Control



Figure 4-7. Foot Control, Connection Detail

Installing/Removing Table Pads

Conductive Tabletop Pads (see *Figure 4-8*) are one of two varieties (related to tabletop attachment):

- **Pads backed with hook-and-loop fastener strips, which mate to hook-and-loop strips on the tabletop.**
- **Pads with mushroom-type fasteners (non hook-and-loop)**

To install a table pad, place pad in position and firmly press associated fasteners together.

To remove a table pad, gently peel or lift the pad, as applicable, to free it from the tabletop.

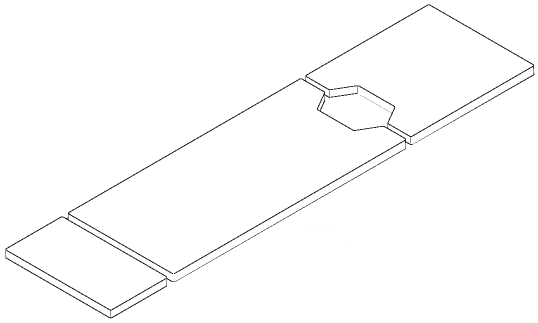

Figure 4-8. Tabletop Pads

Installing/Removing X-Ray Top

The Surgical Table is designed to enable installation of an X-Ray top to allow use of X-Ray cassette film. Attach the four-part X-Ray top as follows (see *Figure 4-9*):

1. **Carefully remove X-Ray top sections from packing container.**

2. Remove pads from tabletop (see *Installing/Removing Table Pads*).
3. Position X-Ray top section over corresponding tabletop section, aligning posts to mounting holes.
4. Press down on X-Ray top section until a click is heard.
5. Ensure X-Ray top sections are securely mounted by gently pulling up on section.
6. Reinstall tabletop pads.
7. Remove and store X-Ray top by reversing above steps.

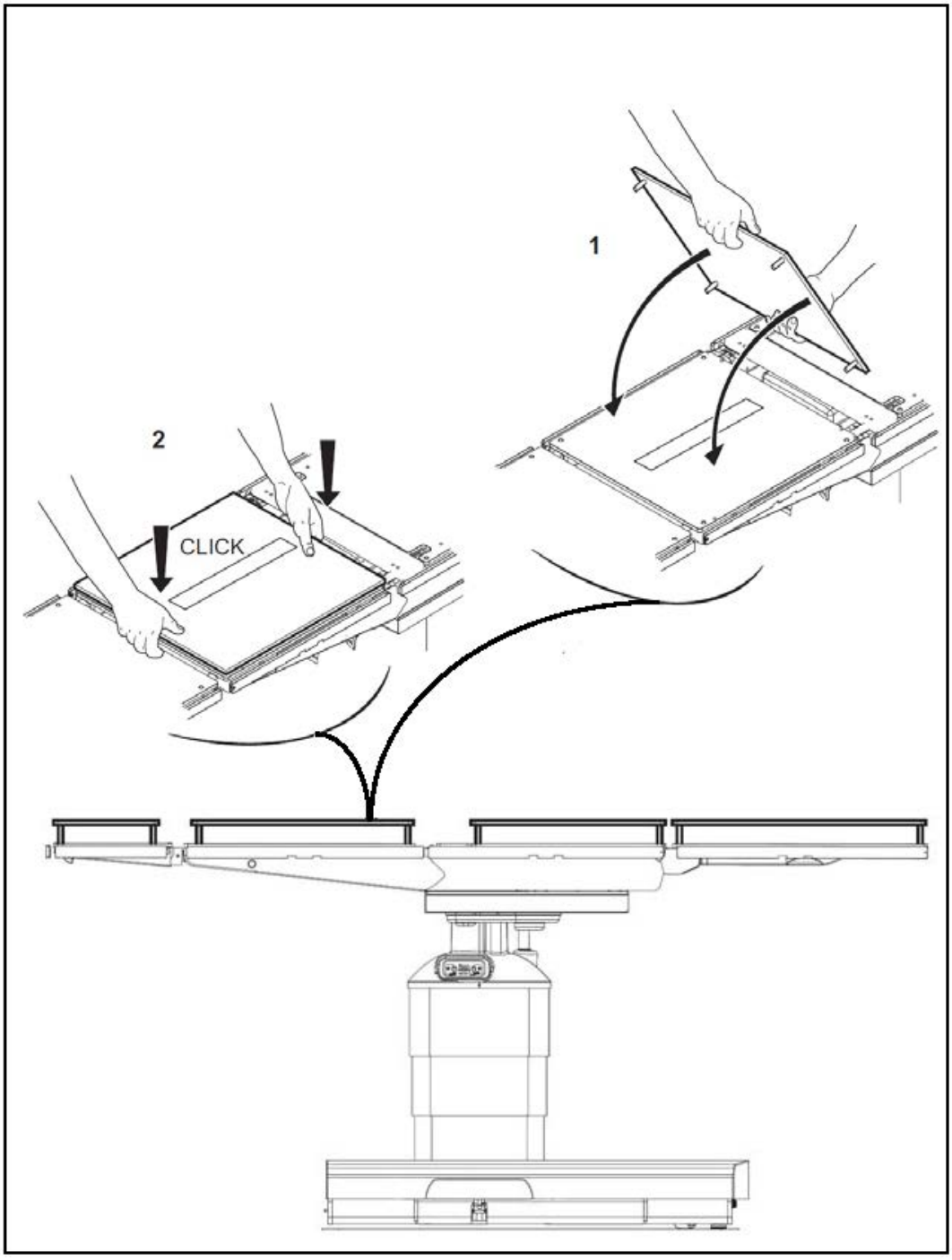

Figure 4-9. X-Ray Top Installation (Typical)

Accessories/Side Rails

The standard STERIS permanently attached 3/8" wide x 1-1/8" tall (9.5 x 28.6 mm) side rails allow for the use of many standard surgery table attachments and accessories. The rails consist of one rail mounted to each side of each tabletop main section.

IMPORTANT: *Regarding Side Rail Loading*

Side Rail loading (with exception of Dual-Articulating Headrest rails) has been evaluated through cantilevered testing to support 200 ft-lb (271 N▪m) maximum. Any additional loading needs to consider table stability.

Dual-articulating headrest side rails support 100 ft-lbs. (135 N▪m) maximum. The headrest end rail supports 50 ft-lb (67 N▪m) maximum.

For complete information on accessory options, consult STERIS.

WARNING

PERSONAL INJURY HAZARD

When installing any table accessory, check for correct attachment and tighten securely (if appropriate). Do not use worn or damaged accessory. Check installation before using any accessory.

WARNING

INSTABILITY HAZARD

Possible patient or user injury, as well as Surgical Table or accessory failure, may result from using STERIS table accessories for other than their stated purpose or from using accessories manufactured and sold by other companies on STERIS surgical tables.

Table 4-1. Surgical Table Specific Accessories*

Accessory	Equipment Number
Foot Control	BF586
Hand Control	BF319
TLT Table Pads (Complete Set) Hook-and-Loop	BF58 (2) BF230 (3) BF291 (4)
PRS Table Pads (Complete Set) Mushroom-Type	BF272 (2) BF279 (3) BF245 (4)
X-Ray Top (Complete Set) Hook-and-Loop	BF101
X-Ray Top (Complete Set) Mushroom Type	BF193

* Contact STERIS for ordering information.

4.3 Installing/Removing Dual-Articulating Head Rest

This section includes the following:

Introduction

Installing the Head Rest

Removing the Head Rest

Introduction

NOTE: For instructions on adjusting the head rest, refer to *Section 5, Operating the Surgical Table*, and to *Figure 4-11*.

WARNING

PERSONAL INJURY HAZARD

Dual-articulating headrest side rails support 100 ft-lb (135 N▪m) maximum. The headrest end rail supports 50 ft-lb (67 N▪m) maximum. Exceeding these limits could result in injury or equipment damage.

Installing the Head Rest

1. Fully loosen both locking thumbscrews located at bottom edge of back frame (see *Figure 4-10*).
2. Insert both head rest installation rods into back frame until fully engaged.

   NOTE: The head rest should slide easily into back frame. Do not force.
3. Fully tighten both locking thumbscrews to lock head rest in place.
4. Pull head rest (both sides) to ensure correct installation.

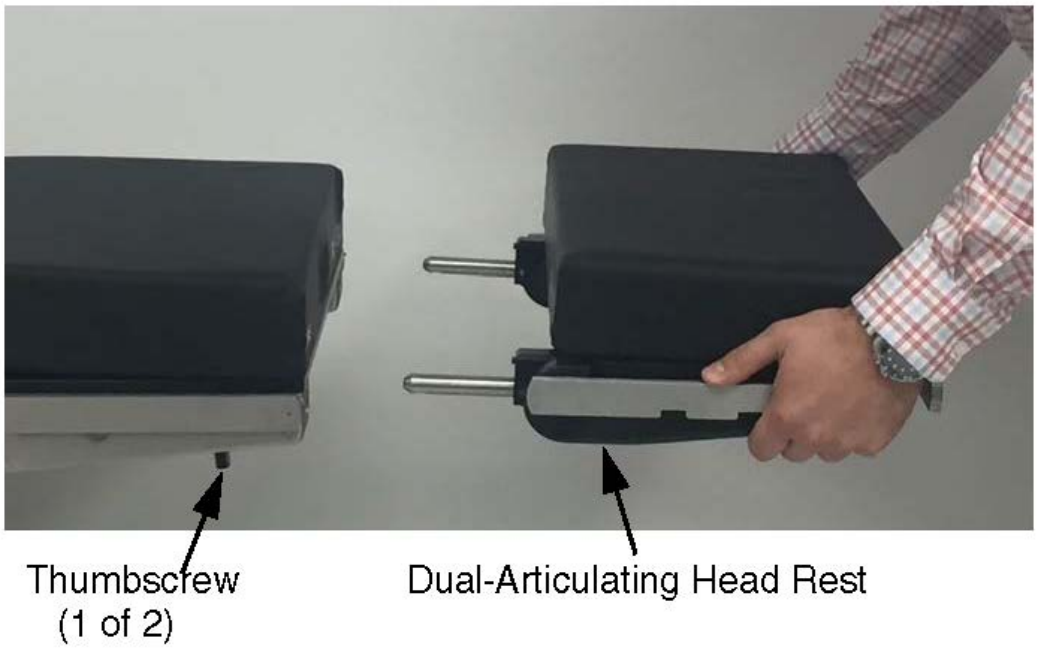

Figure 4-10. Installing the Head Rest

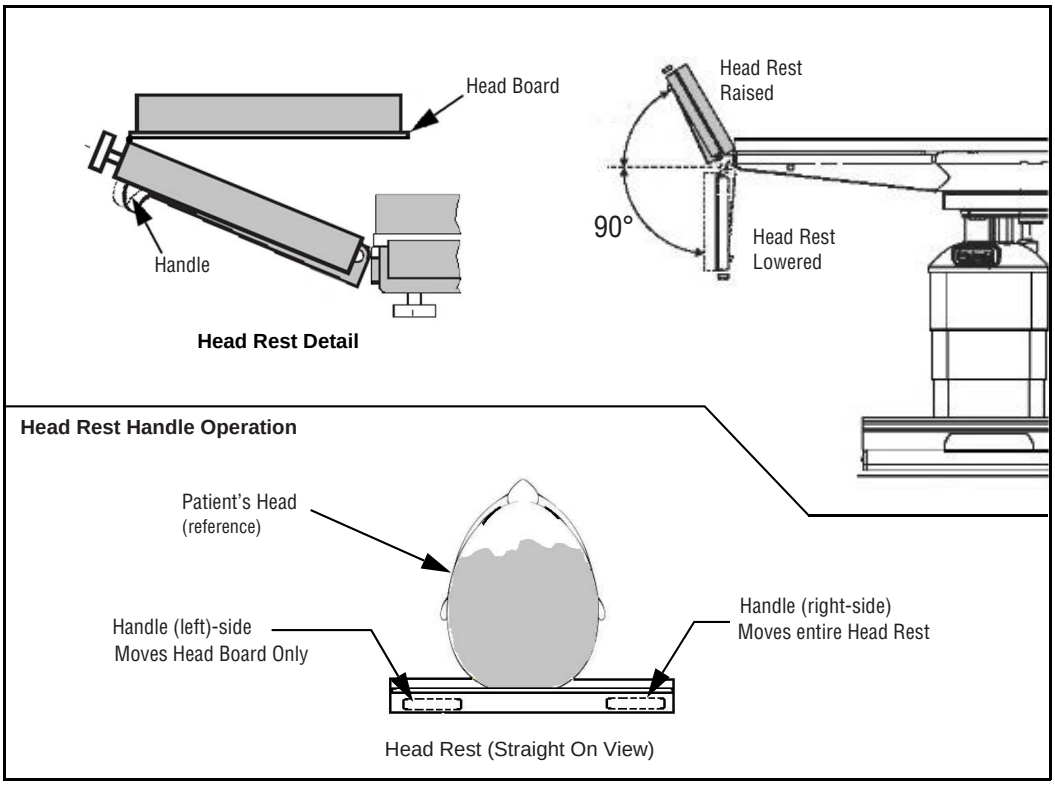

Figure 4-11. Adjusting the Head Rest

Removing the Head Rest

1. **Fully loosen both locking thumbscrews located at bottom edge of back frame (see *Figure 4-11*).**
2. **Pull head rest free of table.**

4.4 Installing/Removing Leg Section

This section includes the following:

Introduction

Installing the Leg Section

Removing the Leg Section

Introduction

WARNING

PERSONAL INJURY HAZARD

⚠ Do not exceed 350 lb (159 kg) on the leg section.

NOTE: This Surgical Table is equipped with Hi-Lock™ locking mechanism enabling quick and easy removal/installation of the leg section with a safety lock feature.

Installing the Leg Section

1. Position tabletop seat section to horizontal by pressing LEG UP button on hand control (should see *Figure 4-12* on hand control), refer to Primary Hand Control or Universal Hand Control Section (operator manual) if needed.
2. With top seat section of table horizontal, insert both leg section installation rods into seat frame until fully engaged. Listen for "click" sound to indicate correct installation (see *Figure 4-13*).

   NOTE: The leg section should slide easily into the back frame (seat section). Do not force.
3. Pull leg section (both sides) to ensure correct installation. Leg section should remain firmly in place.

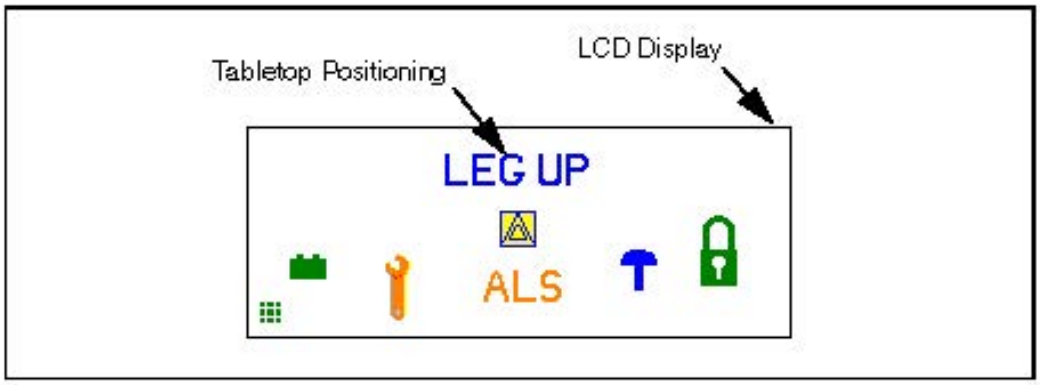

Figure 4-12. Hand Control LCD Screen

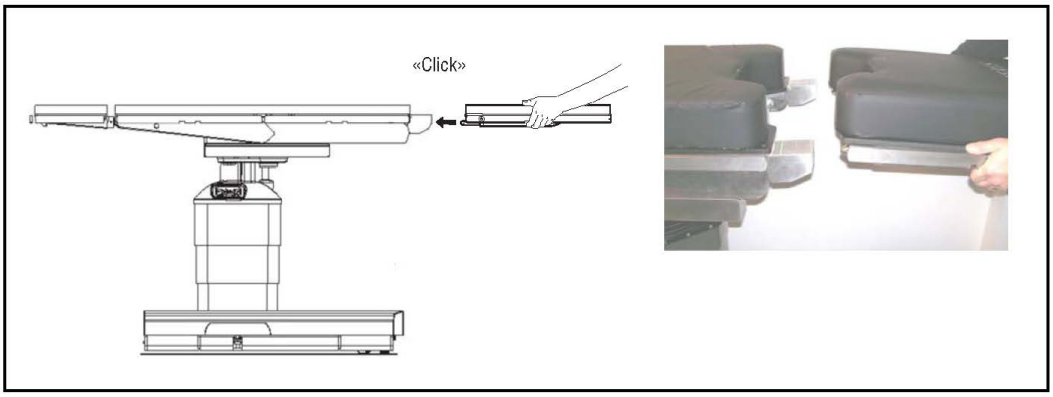

Figure 4-13. Attaching Leg Section

Removing the Leg Section

The surgical table leg section is designed to be easily removed (Hi-Lock locking mechanism) to enable procedures requiring optional leg supports. The leg section can be removed while a patient is on the table. Remove the leg section as follows:

WARNING

PERSONAL INJURY HAZARD

⚠ Do not remove Surgical Table leg section if patient is not properly positioned. Patient's torso and buttocks must be firmly held in place by Table back and seat sections and legs supported by leg supports.

⚠ Do not exceed 350 lb (159 kg) on the leg section.

1. **Using hand control, level leg section (bring to horizontal).**
2. **While holding leg frame, squeeze both handles and simultaneously pull backward (see *Figure 4-14*).**
3. **Safely store leg section to prevent damage.**

   NOTE: When leg section is removed from the table, the LCD Display shows LEG OUT if the LEG UP or LEG DOWN hand control pushbutton is pressed.

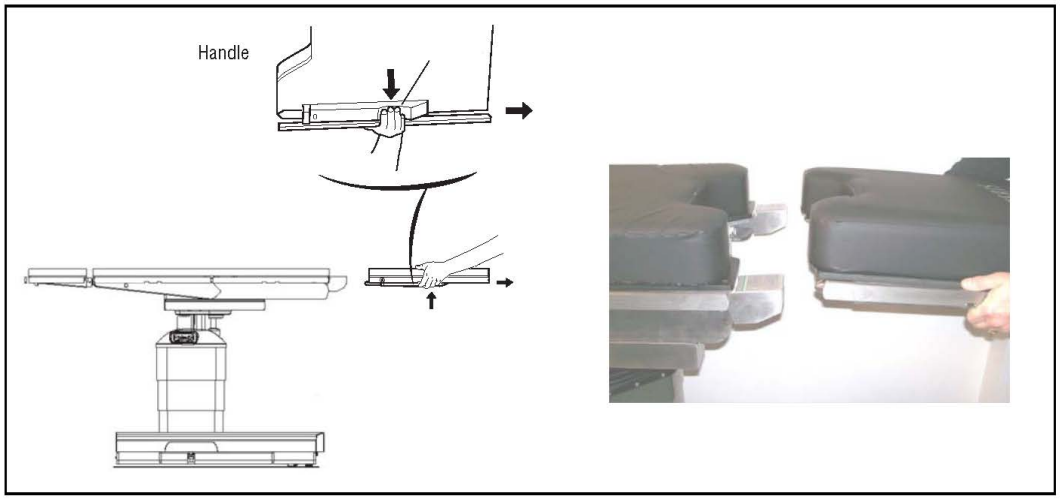

Figure 4-14. Leg Section Removal

Surgical Table Operation

5.1 Introduction

IMPORTANT: *A listing of the Safety Precautions to be observed when operating and servicing this Surgical Table can be found in* ***Safety Precautions and Pinch Points*** *of this manual. Do not operate or service the equipment until you have been trained on this information.*

Use the following information to operate the Surgical Table.

1. **Review Pinch Point Warnings as presented in** *Section 1.2, Warning — Pinching Hazard* **of this manual.**
2. **For instructions concerning one or more of the following tasks, refer to Before Using The Table Section and perform necessary tasks, for example, installing the head rest and the leg section.**
   - **Grounding**
   - **Installing Battery Fuse**
   - **Connecting Table to AC Power**
   - **Connecting Universal Hand Control**
   - **Connecting Optional Foot Control**
   - **Installing/Removing Dual-Articulating Headrest**
   - **Installing/Removing Leg Section**
   - **Installing/Removing Table Pads**
   - **Installing/Removing X-Ray Top**
   - **Accessories/Side Rails**
3. **For information concerning charging the battery, refer to** *Section 7.4, Battery Charging*.
4. **Verify power cord is plugged into both the facility outlet and table receptacle and Main Power Switch is in ON position.**

   NOTE: For cord connected tables, the power cord attachment plug is to be used as a disconnect from facility power. The surgical table must be positioned so plug is not difficult to reach.
5. **For optimum performance, before attempting to operate table, allow table to reach room temperature.**
6. **Position tabletop to LEVEL. (Refer to** *Section 5.2, Universal Hand Control*, **if needed)**

   NOTE: When the Hand Control and Foot Control are both installed, Hand Control has priority.
7. **Manually adjust the head rest, if applicable, as described in steps** *Step a* **through** *Step b*.

   NOTE: The head rest may be positioned UP or DOWN 90° from horizontal (level). For more installation/removal, refer to *Section 4.3, Installing/Removing Dual-Articulating Head Rest*.

   a. **While holding head rest securely in one hand, pull release handle (spring loaded) located under right side of head rest and tilt head rest to desired angle (level in this case).**

   b. **Release handle to lock head rest at desired angle. Move headrest slightly until ratchet mechanism locks headrest in position.**

      NOTE: An audible CLICK is heard when the headrest locks into position.

c. While holding head rest securely in one hand, pull the spring-loaded release handle (located under left side of head rest) and raise head board to desired angle.

d. Release handle to lock head board in place.

NOTE: Locking is immediate when handle is released. There is no audible "click."

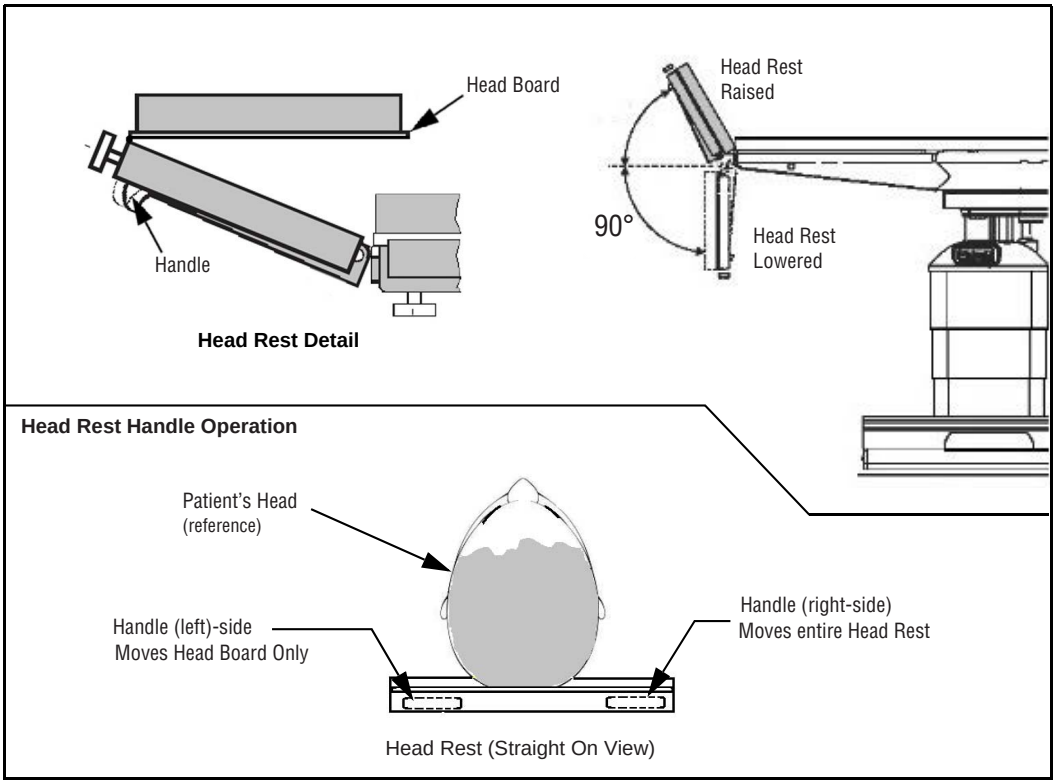

Figure 5-1. Adjusting the Dual-Articulating Head Rest

8. Engage floor locks by pressing hand control LOCK button (Refer to *Section 5.2, Universal Hand Control*, if needed).

Before placing patient on table, ensure patient does not exceed maximum patient weight of:

- 1100 lb (499 kg) Load, Normal and Reverse Patient Position; raise or lower only (no tabletop articulation or slide).
- 1000 lb (454 kg) Load, Normal and Reverse Patient Position; raise or lower; includes all tabletop articulation except tabletop slide.
- 600 lb (272 kg) Load, Normal Patient Position; raise or lower; includes all tabletop articulation and full tabletop slide, (also includes Reverse patient slide toward patient feet but not patient slide toward patient head).
- 575 lb (260 kg) Load, Normal and Reverse Patient; raise or lower; includes all tabletop articulation and full tabletop slide, including reverse patient slide toward patient feet and toward patient head.

After verifying patient weight does not exceed table weight capacity, transfer or position patient and ensure patient is properly restrained (refer to appropriate sections of *Section 3.4, Tabletop Articulation and Patient Positioning*).

NOTE: A patient grounding post/potential equalization terminal (male connector, DIN 42801) is provided. The mating female connector for patient grounding is not furnished by STERIS.

5.2 Universal Hand Control

IMPORTANT: *A listing of the Safety Precautions to be observed when operating and servicing this Surgical Table can be found in* ***Safety Precautions and Pinch Points*** *of this manual. Do not operate or service the equipment until you have been trained on this information.*

This section includes the following:

Introduction

Operation

Error Codes of Display

Power-On Error Messages

Introduction

NOTE: Failure to comply with the safety information contained within can result in injuries, damage to the equipment or damage to other property.

The Universal Hand Control provides a simple user interface to manipulate all Surgical Table articulations. Uses other than those described are not recommended and may not be safe.

The Universal Hand Control is to be operated only by users who have been successfully trained on operation of the applicable Surgical Table in conjunction with the Universal Hand Control. Please contact STERIS for appropriate guidance in-service and training.

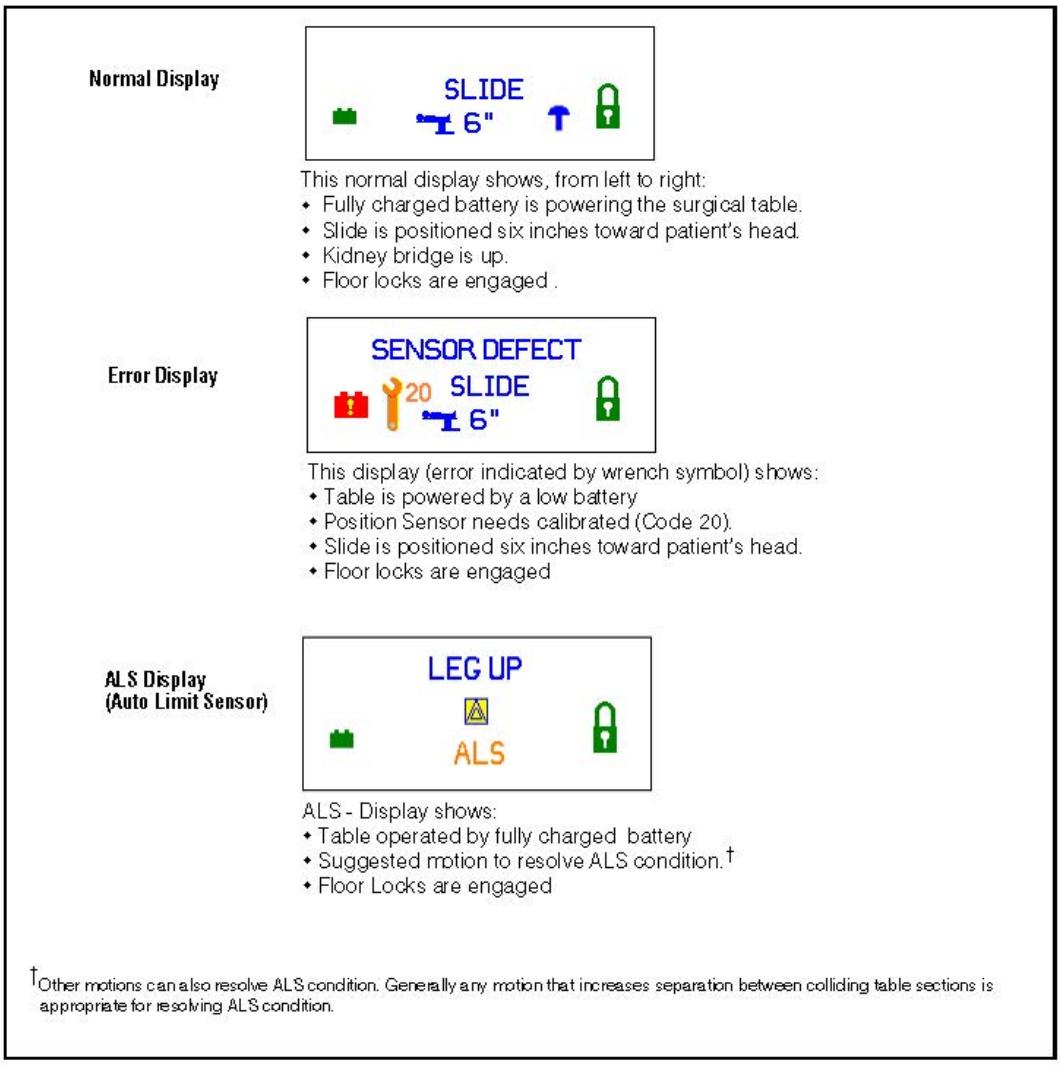

*Refer to *Section 2.3, Hand Control Symbols* for definitions of symbols.

Figure 5-2. Universal Hand Control Screen*

Operation

Use the Universal Hand Control as follows:

1. **Connect Universal Hand Control to Surgical Table and press any key except STOP to activate table.**
2. **Check the Hand Control display to see which table it is configured to control, for example:**

   4095 MODE ENABLED UNIVERSAL HAND CONTROL

   or

   5095 MODE ENABLEDUNIVERSAL HAND CONTROL
3. **If Surgical Table matches compatibility mode shown, the display shows a connectivity message:**

   Example: HCV 1.22 TCV 2.13 4095 TABLE CONNECTED

   - **HCV (Hand Control software Version)**
   - **TCV (Table Control software Version)**

- Type of surgical table connected

4. After a brief time, the display changes to show symbols representing state of table. When a key is pressed, a table articulation is commanded. This is normal operating mode. The surgical Table is now ready for use with the Universal Hand Control.
5. If Surgical Table DOES NOT match compatibility mode, the Universal Hand Control displays a screen permitting user to select the correct compatibility mode (the mode that matches table type detected during power on).

   Example: a 4095 Surgical Table is detected but the Universal Hand Control is configured for a different table.

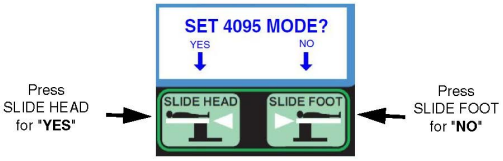

Figure 5-3. Prompt to Select Correct Compatibility Mode

- Pressing SLIDE HEAD (YES) changes the compatibility, in this example, to the 4095 mode.
- Pressing SLIDE FOOT (NO) keeps original compatibility mode of Universal Hand Control and begins table operation. Subsequent behavior depends upon which table is actually connected to Hand Control.

6. After user selects compatibility mode for Universal Hand Control by pressing SLIDE HEAD (YES), the display instructs user to restart table.

   After Universal Hand Control is powered off and on, it functions according to description beginning in Step 2.

   NOTE: A restart is only required after changing compatibility modes.

   RESTART THE TABLE

   PRESS STOP AND ON TO RESTART

   Refer to *Table 5-1* for situation when Universal Hand Control and Surgical Table Compatibility Modes do not match.

Table 5-1. Universal Hand Control and Surgical Table Compatibility Mismatch

Scenario	Corrective Action
When table is powered on, user is prompted to select [applicable] Compatibility Mode.	a. Power table off by pressing STOP button. b. Power table on by pressing any key except STOP. c. Select [correct table] Mode when prompted.
Control display shows BAD VERSION message but otherwise Control and Table function correctly. When table is powered on, user is prompted to select [applicable] Compatibility Mode.	
Control and Table shut down after approximately seven seconds.	a. Power table on by pressing any key except STOP. b. Select [correct table] Mode when prompted.

Error Codes of Display

Universal Hand Control displays numeric error messages beside the Wrench symbol when V2 table control board is installed in a Surgical Table. Numeric error codes persist during a key press for articulation related errors. Numeric error

codes persist until the Surgical Table is powered off for errors related to system failures.*Figure 5-4* shows a typical error code display.

Refer to **Troubleshooting** Section for definitions of the Error Codes and what steps may be taken to remedy the error.

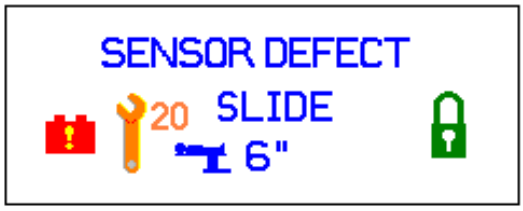

Figure 5-4. Sample Error Code

Power-On Error Messages

As the Surgical Table powers-on, the following compatibility errors may occur:

- **TABLE NOT CONNECTED - The Universal Hand Control did not detect a connection to a Surgical Table.**
- **TABLE NOT SUPPORTED - The Universal Hand Control is connected to a Surgical Table that is not supported.**

5.3 Reverse Patient Orientation

WARNING

PERSONAL INJURY HAZARD

Do not exceed 350 lb (159 kg) on the leg section.

Dual-articulating headrest side rails support 100 ft-lb (135 N▪m) maximum. The headrest end rail supports 50 ft-lb (67 N▪m) maximum. Exceeding these limits could result in injury or equipment damage.

Reverse Patient Orientation, Definition: The headrest is attached to the leg section and the patient oriented with head on headrest.

Some surgeries (for example, shoulder injuries) require the patient to be in reverse positioning and the Table to be operated in a reverse configuration. Press **Reverse Orientation** button on hand control and hold for two seconds, Yellow LED should light beside graphic representation of Reverse Orientation. Press **Reverse Orientation** button again and hold for two seconds to cancel REVERSE ORIENTATION function and green LED lights beside graphic representation of Normal Orientation.

When **Reverse Orientation** button is pressed, all other hand control commands (through the control system) note the new patient head position. Trendelenburg and Lateral Tilt movements and Back and Leg Sections are automatically reversed.

IMPORTANT: *When using the* ***Reverse Orientation*** *button, note the following:*

1. ***The information displayed on the LCD is not reversed.***
2. ***When Surgical Table is turned OFF, control system stores orientation status. Before any new positioning is attempted, ensure Table patient configuration is correct.***
3. ***The headrest is manually adjusted and is not affected by Reverse Orientation button operation.***
4. ***FLEX and REFLEX functions are NOT available for patient safety.***
5. ***When operating in REVERSE ORIENTATION, LEVEL function does NOT operate.***
6. ***The hand control automatically deactivates upon non-use after 30 minutes if floor locks are released and 10-hours when floor locks are engaged. The hand control is reactivated by depressing ANY button other than STOP.***

5.4 Optional Foot Control Operation

This Surgical Table can be operated using the optional foot control which allows operator to control HEIGHT, TREND, and TILT movements. It is important to note that when using the hand control and optional foot control at the same time, the **hand control has priority**. Also, if the hand control **STOP** button is pressed, foot control also switches OFF. To operate the foot control:

1. **Press and release any positioning pedal (on foot control) to switch Table control ON.**

   NOTE: If the hand control is also attached, PEDAL ON appears on the LCD Display message window.
2. **Operate HEIGHT, TREND, and TILT pedals as needed.**
3. **After unplugging foot control from Table, put protective cover over connector.**

5.5 Backup (Override) Control System

IMPORTANT: *A listing of the Safety Precautions to be observed when operating and servicing this Surgical Table can be found in* ***Safety Precautions and Pinch Points*** *of this manual. Do not operate or service the equipment until you have been trained on this information.*

This section includes the following:

Introduction

Operation

Backup Hand Control Description

Return Backup Control System

Introduction

The table is equipped with an auxiliary control system which can be actuated at any time. This feature allows the table to continue operating in the event of primary control malfunction. A foot pump (to provide hydraulic power) and an override-hand-control are located on the right side of the Table base behind a cover panel. The method of adjusting the headrest remains unchanged, as the headrest is always adjusted manually.

Operation

To operate system, proceed as follows (see *Figure 5-5*):

1. **Flip pedal down.**
2. **Slide Backup Hand Control out from base.**
3. **To operate Table functions, pump pedal while pressing desired function button on Backup Hand Control (see *Figure 5-6*).**

WARNING

PERSONAL INJURY AND/OR EQUIPMENT DAMAGE HAZARD

ALS System is not active during Backup Control. Ensure proper tabletop movements to prevent patient/staff injury and/or equipment damage.

During Backup Control, tabletop functions are available even if Surgical Table floor locks are NOT engaged. LOCK table before moving tabletop or transferring patient.

NOTE: When using the Backup (Override) Control System, note the following:

1. **For FLOOR UNLOCK and SLIDE (HEAD and FOOT) functions, it is not necessary to pump pedal.**
2. **Pressing any button on the Backup Hand Control deactivates Primary Hand Control.**
3. **When a SLIDE pushbutton is pressed, the green LED (see *Figure 5-5*) next to the word CAUTION should light indicating system is active.**
4. **When any tabletop function button (except SLIDE) is pressed, green LED next to USE WITH FOOT PUMP should light.**
5. **The ALS System is NOT active during Backup (Override) Control System operation.**
6. **When Table is in the Backup UNLOCK configuration, tabletop functioning IS active. LOCK table before moving tabletop.**
7. **Reverse Orientation is NOT available in Backup Control operation. If patient was in reverse orientation when auxiliary control was activated, change TREND to REV. TREND, LEFT TILT to RIGHT TILT, etc.**

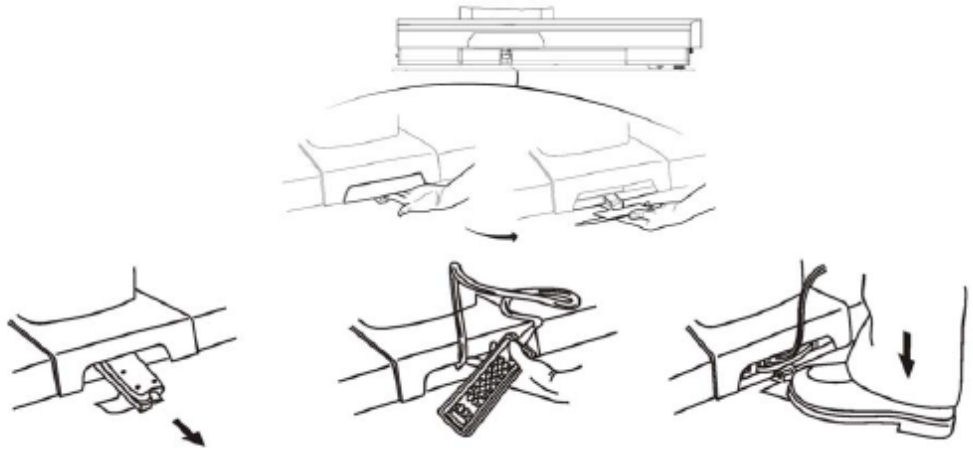

Figure 5-5. Backup (Override) Control System

Backup Hand Control Description

The Backup Hand Control pushbutton descriptions are as follows (see *Figure 5-6*):

NOTE: Simply release the Backup Hand Control pushbutton when desired Surgical Table Tabletop position has been reached and Table automatically stops and locks in position. Refer to the Range of Motion information of the **Technical Specifications** Section for the positioning of the following Table functions.

SLIDE HEAD: When depressed, Zip-Slide moves tabletop toward head end. When slide returns to central ("0") position, movement stops for one second before continuing. Function powered by battery.

SLIDE FOOT: When depressed, Zip-Slide moves tabletop toward foot end. When slide returns to central ("0") position, movement stops for one second before continuing. Function powered by battery.

HEIGHT UP: When depressed and pumping simultaneously, the **entire** tabletop raises.

HEIGHT DN: When depressed and pumping simultaneously, the **entire** tabletop lowers.

TREND: When depressed and pumping simultaneously, the head end of the tabletop lowers; or, foot end raises.

REVERSE TREND: When depressed and pumping simultaneously, the head end of the tabletop raises; or, foot end lowers.

TILT LEFT: When depressed and pumping simultaneously, the tabletop rolls to the left (patient's left or viewing the Table from the head end).

TILT RIGHT: When depressed and pumping simultaneously, the tabletop rolls to the right (patient's right or viewing the Table from the head end).

BACK UP: When depressed and pumping simultaneously, the tabletop back section raises.

BACK DN: When depressed and pumping simultaneously, the tabletop back section lowers.

LEG UP: When depressed and pumping simultaneously, the tabletop leg section raises.

LEG DN: When depressed and pumping simultaneously, the tabletop leg section lowers.

KIDNEY UP: When depressed and pumping simultaneously, the tabletop KIDNEY Elevator raises to the maximum 4" (110 mm).

KIDNEY DN: When depressed and pumping, the tabletop Kidney Elevator Mechanism lowers.

FLOOR LOCK: When depressed and pumping simultaneously, floor locks are slowly lowered. To ensure Table is correctly secured to the floor, gently push on Table.

FLOOR UNLOCK: When depressed, floor locks are slowly released. To ensure floor locks are completely disengaged, gently push on Table.

NOTE: When Table is in the Backup **FLOOR UNLOCK** configuration, tabletop functioning IS active. **FLOOR LOCK** table before moving tabletop.

STOP: When depressed, all hand control function buttons deactivate. All functions are stopped immediately.

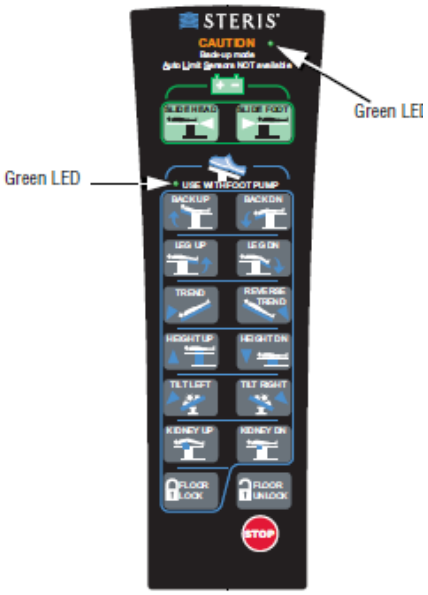

Figure 5-6. Backup (Override) Hand Control

Return Backup Control System

When situation has been corrected and normal Surgical Table operation is available, replace Backup Control System as follows (see *Figure 5-5*):

1. **Turn Backup Hand Control face down.**
2. **Wind cable and place under controller.**
3. **Slide controller and cord back into Table base.**
4. **Fold pedal back to original position.**

Troubleshooting

6.1 Introduction

WARNING

PERSONAL INJURY AND/OR EQUIPMENT DAMAGE HAZARD

⚠ Regularly scheduled preventive maintenance is required for safe and reliable operation of this equipment. Contact STERIS to schedule preventive maintenance.

⚠ Repairs and adjustments to this equipment must be made only by STERIS or STERIS-trained service personnel. Maintenance performed by unqualified personnel or installation of unauthorized parts could cause personal injury, result in improper equipment performance, invalidate the warranty, or result in costly damage. Contact STERIS regarding service options.

NOTE: Never permit unqualified persons to service the table.

This section describes the types of Surgical Table malfunctions most likely to occur, and probable causes and corrective actions. Use the included information to identify general problems and those indicated by the hand control LEDs and Wrench Symbol.

Universal Hand Control displays numeric error messages beside the Wrench Symbol when V2 table control board is installed in a Surgical Table. Numeric error codes persist during a key press for articulation related errors. Numeric error codes persist until the Surgical Table is powered off for errors related to system failures.*Figure 6-1* shows a typical error code display.

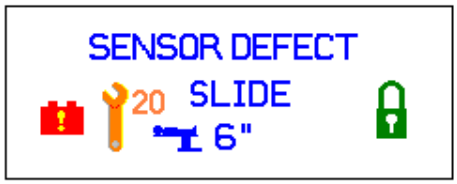

Figure 6-1. Example of Error Code Display - Error Code 20 Shown

If unable to correct the problem with the use of the included sections, or a problem occurs not described, please contact STERIS to arrange for a trained service technician to promptly place your equipment in proper working order.

Contacting STERIS: First, try to define the situation and determine whether you can solve it yourself using the supplied information in this section. If you cannot solve the situation, call STERIS and give the following information for the table: serial number, model number, date of purchase.

6.2 1 Key Only — ALM

Condition

Message appears on Hand Control — 1 Key Only.

General Troubleshooting	Additional Information
Two pushbuttons are pressed on the Hand Control at the same time.	1. **Press correct movement button (one button at a time).**
Pushbutton(s) defective on the Hand Control.	1. **Replace Hand Control.**

6.3 ALS Alarm When Raising Back Section - nonALM

Condition

ALS alarm occurring when raising back section with kidney bridge down.

General Troubleshooting	Additional Information
Problem with Kidney Bridge.	1. **Contact STERIS.**

6.4 Bad Version — ALM

Condition

Message appears on Hand Control — Bad Version.

General Troubleshooting	Additional Information
Hand Control software version is incompatible with control board software version.	1. **Contact STERIS.**

6.5 Batt Defect — ALM

Condition

Message appears on Hand Control — Batt Defect.

General Troubleshooting	Additional Information
Battery needs inspection.	1. **Contact STERIS.**

6.6 Batteries Do Not Charge - nonALM

Condition

Surgical Table operates correctly on both battery and Facility power but the batteries do not charge. Main Power Switch green LED is ON when power cord is plugged into appropriate Facility power and is ON.

General Troubleshooting	Additional Information
Line fuses (F6/F7) faulty.	1. **Replace line fuses (F6/F7) per appropriate section of *Section 4.2, Installation*.** 2. **If problem persists, contact STERIS.**

6.7 Battery Fuse — ALM

Condition

Message appears on Hand Control — Battery Fuse.

General Troubleshooting	Additional Information
Missing or blown fuse (fuse holder access is external to Surgical Table base). Hand Control does not turn ON without Facility power.	1. **Check fuse. Replace as necessary per appropriate section of *Section 4.2, Installation*.** 2. **Plug the power cord into Facility power.**

6.8 Battery Mode — ALM

Condition

Message appears on Hand Control — Battery Mode. Surgical Table operates off batteries when connected to Facility ac power.

General Troubleshooting	Additional Information
Fuse F2 may be blown.	1. **Check fuse (F2). Replace as necessary per appropriate section of *Section 4.2, Installation*.** 2. **If problem persists, contact STERIS.**

6.9 Cannot Read Hand Control Display — nonALM

Condition

With Surgical Table plugged into Facility power, Hand Control display cannot be read.

General Troubleshooting	Additional Information
Hand Control is defective.	1. **Replace Hand Control.** 2. **If problem persists, contact STERIS.**

6.10 Charger Defect — ALM

Condition

Message appears on Hand Control — Charger Defect.

General Troubleshooting	Additional Information
Battery charger circuit in power supply requires inspection.	1. **Contact STERIS.**

6.11 Column Shroud Failure - nonALM

Condition

Failed or sticking column shrouds during raise and lower.

General Troubleshooting	Additional Information
Misaligned or damaged shrouds.	1. **Contact STERIS.**

6.12 Connect AC Power or Plug Mains — ALM

Condition

Message appears on Hand Control — Connect AC Power or Plug Mains.

General Troubleshooting	Additional Information
Battery voltage is below 19V.	1. **Plug table into Facility power.** 2. **Ensure switch is ON.** 3. **Ensure green AC LED is ON.** 4. **If problem persists, contact STERIS.**

6.13 Dual Command — ALM

Condition

Message appears on Hand Control — Dual Command.

General Troubleshooting	Additional Information
Commands are sent from the optional foot pedal and the Hand Control at the same time.	1. **Hand Control has priority.**

6.14 False ALS After Slide-to-Foot Articulation - nonALM

Condition

Articulation is performed followed by a slide-to-foot articulation, a false ALS alarm may occur.

NOTE: This problem occurs only with the P150832769 Master Control Board.

General Troubleshooting	Additional Information
Electrical Issue	1. **Contact STERIS.**

6.15 Floor Lock Issue — nonALM

Condition

One floor lock is not operating or self-compensating floor locks extend fully lifting Surgical Table off all four casters.

General Troubleshooting	Additional Information
Issue with floor lock manifold.	1. **Contact STERIS.**
Problem in control system.	1. **Contact STERIS.**

6.16 Hand Control Does Not Activate — nonALM

Condition

Hand Control does not activate when Surgical Table is plugged into Facility power and any pushbutton (except **STOP**) is pressed.

General Troubleshooting	Additional Information
Main battery fuse is blown.	1. **Replace battery fuse per appropriate section of *Section 4.2, Installation*.**
Faulty power cord.	1. **Replace power cord.**
Hand Control not plugged into table properly.	1. **Correctly plug Hand Control into table.**
Faulty Hand Control. **NOTE:** Use optional foot control/auxiliary control system until HC is replaced.	1. **Replace Hand Control.** 2. **If problem persists, contact STERIS.**

6.17 Hydraulic Pump Does Not Operate But Tabletop Slide Function Does - nonALM

Condition

Surgical Table hydraulic pump does not operate but tabletop slide function does if the floor locks are engaged.

General Troubleshooting	Additional Information
Hydraulic pump power fuse (F4) faulty.	1. **Replace hydraulic pump power fuse (F4) per appropriate section of *Section 4.2, Installation*.**

6.18 Hydraulic Reservoir Shows Oil Loss But No Leaks Found - nonALM

Condition

Hydraulic oil reservoir shows a loss of fluid but no external leaks discovered.

General Troubleshooting	Additional Information
Height cylinder requires inspection.	1. **Contact STERIS.**

6.19 INTELLIPOWER OFF, Hand Control ON, Power Switch LED ON - nonALM

Condition

INTELLIPOWER Display bar graph is OFF, Hand Control is ON, and Main Power Switch Green LED is ON.

General Troubleshooting	Additional Information
Battery charger fuse (F1) is faulty.	1. **Replace battery charger fuse (F1) per appropriate section of *Section 4.2, Installation*.** 2. **If problem persists, contact STERIS.**

6.20 INTELLIPOWER ON, Battery Status Indicator ON, Power Plug OFF - nonALM

Condition

INTELLIPOWER Display bar graph is ON, Battery Status Indicator is ON, and AC Power Plug is OFF.

General Troubleshooting	Additional Information
Battery charger fuse (F1) is faulty.	1. **Replace battery charger fuse (F1) per appropriate section off *Section 4.2, Installation*.** 2. **If problem persists, contact STERIS.**
Batteries require inspection.	1. **Contact STERIS.**

6.21 Lock Again — ALM

Condition

Message appears on Hand Control — Lock Again.

The pressure switch status does not change after FLOOR LOCK is pressed or status does change and FLOOR LOCK was not pressed.

General Troubleshooting	Additional Information
Floor Lock requires inspection.	1. **Contact STERIS.**

6.22 Loss of Table Function But Battery Fuse (F8) OK - nonALM

Condition

Loss of Surgical Table function but Battery Fuse (F8) is OK.

General Troubleshooting	Additional Information
Short circuit or failed Hand Control component.	1. **Isolate Primary Hand Control and check operation with Backup Hand Control.** 2. **Check both Hand Control cables.** 3. **Replace Primary Hand Control.**
Overcharging of batteries.	1. **Contact STERIS.**

6.23 Low Battery — ALM

Condition

Message appears on Hand Control — Low Battery.

General Troubleshooting	Additional Information
Battery voltage is measured below 23 V.	1. **Plug power cord into Facility power.** 2. **If green AC LED is not ON, ensure power switch is ON.** 3. **If problem persists, contact STERIS.**

6.24 Main Power Switch Green LED Off

Condition

Surgical Table is not operating and there is no green light illuminated on the Main Power Switch.

General Troubleshooting	Additional Information
Main Power Switch is **OFF**.	1. **Turn Main Power Switch to ON.**
Power cord not plugged into Facility power.	1. **Plug power cord into appropriate Facility power supply.**
Defective power cord.	1. **Replace power cord.**
Power switch needs to be inspected.	1. **Contact STERIS.**

6.25 Motor Defect — ALM

Condition

Message appears on Hand Control — Motor Defect.

General Troubleshooting	Additional Information
No SLIDE motor control or SLIDE inoperative.	1. **Contact STERIS.**

6.26 Motor Fail — ALM

Condition

Message appears on Hand Control — Motor Fail.

General Troubleshooting	Additional Information
SLIDE is inoperative.	1. **Contact STERIS.**

6.27 No Functions Available Using Hand Control — nonALM

Condition

No Surgical Table operating functions are available using the Hand Control.

General Troubleshooting	Additional Information
Hand Control not plugged into table properly.	1. **Correctly plug Hand Control into table.**
No power to Hand Control. Table deactivates after 30 minutes of non-use.	1. **Press any button on Hand Control (except STOP).**
Faulty Hand Control. **NOTE:** Use foot/auxiliary control. If Table functions correctly, HC is faulty.	1. **Replace Hand Control.** 2. **If problem persists, contact STERIS.**
Battery fuse (F8) is faulty.	1. **Replace battery fuse.**
Insufficient battery charge (power).	1. **Connect power cord to appropriate Facility power and turn Main Power Switch to ON. Allow batteries to charge 12 hours to restore full charge.**

6.28 No Tabletop Slide and Floor Lock Operation - nonALM

Condition

Surgical Tables operates correctly (Facility and battery power) except for the SLIDE function and the floor locks.

General Troubleshooting	Additional Information
Situation with Surgical Table electrical system.	1. **Contact STERIS.**

6.29 Only Tabletop Slide Function Operates — nonALM

Condition

Only tabletop slide function operates.

General Troubleshooting	Additional Information
Faulty Surgical Table power system.	1. **Contact STERIS.**

6.30 Power Defect — ALM

Condition

Message appears on Hand Control — Power Defect.

General Troubleshooting	Additional Information
Transformer too hot. Surgical Table still operates on battery power.	1. **Wait for transformer to cool (30-60 minutes).** 2. **Try function again.** 3. **If problem persists, contact STERIS.**

6.31 Pump Defect — ALM

Condition

Message appears on Hand Control — Pump Defect.

General Troubleshooting	Additional Information
No hydraulic pump control.	1. **Contact STERIS.**

6.32 Pump Fail — ALM

Condition

Message appears on Hand Control — Pump Fail.

General Troubleshooting	Additional Information
Pump does not shut off.	1. **Contact STERIS.**

6.33 Reverse Orient — ALM

Condition

Message appears on Hand Control — Reverse Orient.

General Troubleshooting	Additional Information
User tried to use Flex or Reflex function on the Hand Control. Flex and Reflex are disabled in reverse orientation.	1. **Press REV. ORIENT button to change to Normal Orientation.** 2. **Press desired FLEX or REFLEX button on Hand Control.**

6.34 Sensor DEF — ALM

Condition

SENSOR DEF displays after flex articulation. Flex display on Hand Control displays dashes. Table may or may not level correctly.

General Troubleshooting	Additional Information
An internal sensor requires inspection.	1. **Contact STERIS.**

6.35 Sensor Defect — ALM

Condition

Message appears on Hand Control — Sensor Defect.

General Troubleshooting	Additional Information
An internal sensor requires inspection.	1. **Contact STERIS.**

6.36 Sensor Fail — ALM

Condition

Message appears on Hand Control — Sensor Fail.

General Troubleshooting	Additional Information
An internal sensor requires inspection.	1. **Contact STERIS.**

6.37 Slide Defect — ALM

Condition

Message appears on Hand Control — Slide Defect.

General Troubleshooting	Additional Information
No SLIDE control. SLIDE inoperative.	1. **Contact STERIS.**

6.38 Slide Fail — ALM

Condition

Message appears on Hand Control — Slide Fail.

General Troubleshooting	Additional Information
SLIDE is continuously operating or SLIDE is inoperative.	1. **Contact STERIS.**

6.39 Table Articulation Drifts — nonALM

Condition

Surgical Table articulation drifts or is spongy.

General Troubleshooting	Additional Information
Hydraulic system issue.	1. **Contact STERIS.**

6.40 Table Does Not Function on Facility Power But Does on Battery Power - nonALM

Condition

Surgical Table does not function on with power cord plugged into appropriate Facility power. However, table does function on battery power.

General Troubleshooting	Additional Information
Fuse blown.	1. **Contact STERIS.**

6.41 Table Does Not LEVEL Using Hand Control — nonALM

Condition

Surgical Table does not LEVEL using the Hand Control but all other buttons function normally.

General Troubleshooting	Additional Information
The sensors needed for the leveling function are faulty.	1. **Manually level tabletop using the other Hand Control function buttons.** 2. **If problem persists, contact STERIS.**
Faulty Hand Control. **NOTE:** Use foot control/auxiliary control system until faulty device is replaced.	1. **Replace Hand Control.** 2. **If condition persists, contact STERIS.**

6.42 Table Does Not Raise/Lower Using Hand Control — nonALM

Condition

Surgical Table does not raise or lower using the Hand Control.

General Troubleshooting	Additional Information
Hand Control is not on.	1. **Press any button on Hand Control (except STOP).**
Faulty Hand Control. **NOTE:** Use foot control/auxiliary control until HC is replaced.	1. **Replace Hand Control.** 2. **If problem persists, contact STERIS.**

6.43 Table Does Not Tilt Using Hand Control — nonALM

Condition

Surgical Table does not tilt right or left using the Hand Control.

General Troubleshooting	Additional Information
Hand Control is not on.	1. **Press any button on Hand Control (except STOP).**
Faulty Hand Control. **NOTE:** Use foot control/auxiliary control system until faulty device is replaced.	1. **Replace Hand Control.** 2. **If problem persists, contact STERIS.**

6.44 Table Does Not Trendelenburg/Reverse Trendelenburg Using Hand Control — nonALM

Condition

Surgical Table does not Trendelenburg or Reverse Trendelenburg using the Hand Control.

General Troubleshooting	Additional Information
Hand Control is not on.	1. **Press any button on Hand Control (except STOP).**
Faulty HC. **NOTE:** Use foot/auxiliary control until HC is replaced.	1. **Replace Hand Control.** 2. **If problem persists, contact STERIS.**

6.45 Table Has Longitudinal Mechanical Play - nonALM

Condition

Table has longitudinal mechanical play.

General Troubleshooting	Additional Information
Issue in the Slide system.	1. **Contact STERIS.**

6.46 Table Is Locked But Hand Control Indicates Unlocked - nonALM

Condition

Table is locked but Primary Hand Control indicates unlocked.

General Troubleshooting	Additional Information
Internal pressure switches require inspection.	1. **Contact STERIS.**

6.47 Table Remains on Battery Power — nonALM

Condition

Surgical Table remains on battery power even when main power cord is plugged into Facility power.

General Troubleshooting	Additional Information
Incorrect power cord connection.	1. **Verify plug is properly seated.** 2. **Verify Facility outlet is providing power.**
Faulty power cord.	1. **Replace power cord.**

6.48 Table Rocks While on Casters - nonALM

Condition

Surgical Table rocks while on casters. One caster is not touching floor.

General Troubleshooting	Additional Information
Uneven floor.	1. **Check evenness of floor.**
Caster mounting pads require inspection.	1. **Contact STERIS.**

6.49 Unanticipated Table Movement — nonALM

Condition

Table moves without operator input.

General Troubleshooting	Additional Information
Hand Control issue.	1. Isolate Primary Hand Control and check operation with Backup Hand Control. 2. Replace Primary Hand Control. 3. Contact STERIS.
Fluid ingress into one/both Hand Controls.	1. Replace faulty Hand Control.
Bad Backup Hand Control.	1. Unplug Backup Hand Control and check operation of Primary Hand Control. 2. Replace Backup Hand Control.

6.50 Unusual Noise While Tabletop Is Translating - nonALM

Condition

Unusual noise is heard while tabletop is translating and slide control board failing frequently.

General Troubleshooting	Additional Information
An issue with linear side rail bearings	1. Contact STERIS.

6.51 Valve Defect — ALM

Condition

Message appears on Hand Control — Valve Defect.

General Troubleshooting	Additional Information
No valve control.	1. Contact STERIS.

6.52 Valve Fail — ALM

Condition

Message appears on Hand Control — Valve Fail.

General Troubleshooting	Additional Information
Valve does not shut off.	1. Contact STERIS.

6.53 Voltage Peak — ALM

Condition

Message appears on Hand Control — Voltage Peak.

General Troubleshooting	Additional Information
Battery voltage reaches 31 V (batteries are overcharging which can damage Surgical Table).	1. **Immediately disconnect power cord.** 2. **Contact STERIS.**

6.54 Wrench 2 — ALM

Condition

Wrench 2 Alarm ICON appears on the Hand Control.

General Troubleshooting	Additional Information
Commands received from both Primary and Auxiliary Hand Controls.	1. **Only one Hand Control (Primary or Auxiliary) is required to perform user guided task.** 2. **If condition persists, contact STERIS.**

6.55 Wrench 7 — ALM

Condition

Wrench 7 Alarm ICON appears on the Hand Control.

General Troubleshooting	Additional Information
Surgical Table SLIDE operating blocked.	1. **Press STOP.** 2. **Something is obstructing the Tabletop producing an overvoltage situation. Remove obstruction.** 3. **Repeat desired operation.** 4. **If condition persists, contact STERIS.**

6.56 Wrench 9 — ALM

Condition

Wrench 9 Alarm ICON appears on the Hand Control.

General Troubleshooting	Additional Information
Surgical Table batteries depleted.	1. **Plug table into Facility power.** 2. **Recharge batteries when able.** 3. **If condition persists, contact STERIS.**

6.57 Wrench 10 — ALM

Condition

Wrench 10 Alarm ICON appears on the Hand Control.

General Troubleshooting	Additional Information
Floor locks require inspection.	1. Contact STERIS.

6.58 Wrench 11 — ALM

Condition

Wrench 11 Alarm ICON appears on the Hand Control.

General Troubleshooting	Additional Information
Hand Control button depressed too long.	1. If button was pressed for more than one minute, release button and repress for less than one minute. 2. If no button was depressed, press STOP to stop any table movement. 3. If condition persists after reset, replace faulty Hand Control. 4. If condition persists, Contact STERIS.

6.59 Wrench 12 — ALM

Condition

Wrench 12 Alarm ICON appears on the Hand Control.

General Troubleshooting	Additional Information
TILT sensor need inspection. Combination movements (Level, Flex, and Reflex) are not allowed.	1. Contact STERIS.

6.60 Wrench 13 — ALM

Condition

Wrench 13 Alarm ICON appears on the Hand Control.

General Troubleshooting	Additional Information
TRENDELENBURG sensor requires inspection. Combination movements (Level, Flex, and Reflex) are not allowed.	1. Contact STERIS.

6.61 Wrench 14 — ALM

Condition

Wrench 14 Alarm ICON appears on the Hand Control. Combination movements (Level, Flex, and Reflex) are not allowed.

General Troubleshooting	Additional Information
BACK sensor requires calibration.	1. **Contact STERIS.**

6.62 Wrench 15 — ALM

Condition

Wrench 15 Alarm ICON appears on the Hand Control.

General Troubleshooting	Additional Information
LEG sensor requires inspection. Combination movements (Level, Flex, and Reflex) are not allowed.	1. **Contact STERIS.**

6.63 Wrench 17 — ALM

Condition

Wrench 17 Alarm ICON appears on the Hand Control.

General Troubleshooting	Additional Information
HEIGHT sensor requires inspection. Combination movements (Level, Flex, and Reflex) are not allowed.	1. **Contact STERIS.**

6.64 Wrench 18 — ALM

Condition

Wrench 18 Alarm ICON appears on the Hand Control.

General Troubleshooting	Additional Information
SLIDE sensor requires inspection. Combination movements (Level, Flex, and Reflex) are not allowed.	1. **SLIDE toward head and floor UNLOCK/LOCK commands are not allowed if SLIDE sensor is defective.** 2. **Contact STERIS.**

6.65 Wrench 20 — ALM

Condition

Wrench 20 Alarm ICON appears on the Hand Control.

General Troubleshooting	Additional Information
Sensor needs inspection. Combination movements (Level, Flex, and Reflex) are not allowed.	1. **Contact STERIS.**

6.66 Wrench 21 — ALM

Condition

Wrench 21 Alarm ICON appears on the Hand Control.

General Troubleshooting	Additional Information
Battery fuse and/or battery require inspection.	1. **Contact STERIS.**

6.67 Wrench 22 — ALM

Condition

Wrench 22 Alarm ICON appears on the Hand Control.

General Troubleshooting	Additional Information
Battery requires inspection.	1. **Contact STERIS.**

6.68 Wrench 23 — ALM

Condition

Wrench 23 Alarm ICON appears on the Hand Control.

General Troubleshooting	Additional Information
Batteries and charger require inspection.	1. **Contact STERIS.**

6.69 Wrench 24 — ALM

Condition

Wrench 24 Alarm ICON appears on the Hand Control.

General Troubleshooting	Additional Information
Power Supply requires inspection.	1. **Contact STERIS.**

6.70 Wrench 25 — ALM

Condition

Wrench 25 Alarm ICON appears on the Hand Control.

General Troubleshooting	Additional Information
Hydraulics failure. Inspection required.	1. **Contact STERIS.**

6.71 Wrench 26 — ALM

Condition

Wrench 26 Alarm ICON appears on the Hand Control.

General Troubleshooting	Additional Information
Hydraulics failure. Inspection required.	1. **Contact STERIS.**

6.72 Wrench 27 — ALM

Condition

Wrench 27 Alarm ICON appears on the Hand Control.

General Troubleshooting	Additional Information
Slide system needs inspection.	1. **Contact STERIS.**

6.73 Wrench 28 — ALM

Condition

Wrench 28 Alarm ICON appears on the Hand Control.

General Troubleshooting	Additional Information
Slide system needs inspection.	1. **Contact STERIS.**

6.74 Wrench 29 — ALM

Condition

Wrench 29 Alarm ICON appears on the Hand Control.

General Troubleshooting	Additional Information
Slide feature needs inspection.	1. **Contact STERIS.**

6.75 Wrench 30 — ALM

Condition

Wrench 30 Alarm ICON appears on the Hand Control.

General Troubleshooting	Additional Information
Continuous slide command received.	1. Restart Surgical Table by pressing STOP button followed by any command button. 2. Test table with a known working Hand Control from another table. Replace faulty Hand Control if this corrects alarm. 3. If problem persists, contact STERIS.

6.76 Wrench 31 — ALM

Condition

Wrench 31 Alarm ICON appears on the Hand Control.

General Troubleshooting	Additional Information
Software update required.	1. Contact STERIS.

6.77 Wrench 32 — ALM

Condition

Wrench 32 Alarm ICON appears on the Hand Control.

General Troubleshooting	Additional Information
Power Supply requires inspection.	1. Contact STERIS.

6.78 Wrench 33 — ALM

Condition

Wrench 33 Alarm ICON appears on the Hand Control. Surgical Table turns OFF 10 seconds after message is displayed.

General Troubleshooting	Additional Information
Battery and wire harness require inspection.	1. Contact STERIS.

6.79 Wrench 34 — ALM

Condition

Wrench 34 Alarm ICON appears on the Hand Control. Table turns OFF 10 seconds after message is displayed.

General Troubleshooting	Additional Information
Continuous SLIDE command received.	1. **Restart Surgical Table by pressing the STOP button followed by any command button.** 2. **Test table with a known working Hand Control from another table. Replace faulty Hand Control if this corrects alarm.** 3. **If problem persists, contact STERIS.**
Master Control Board requires inspection.	1. **Contact STERIS.**

6.80 Wrench 37 — ALM

Condition

Wrench 37 Alarm ICON appears on the Hand Control.

General Troubleshooting	Additional Information
Table operating more than 30 minutes while unlocked or 10 hours when locked.	1. **Restart Surgical Table by pressing a command button.** 2. **Test table with a known working Hand Control from another table. Replace faulty Hand Control if this corrects alarm.** 3. **If problem persists, contact STERIS.**

6.81 Wrench 42 — ALM

Condition

Wrench 42 Alarm ICON appears on the Hand Control.

General Troubleshooting	Additional Information
Master Control Board needs inspection.	1. **Contact STERIS.**

6.82 Wrench 47 — ALM

Condition

Wrench 47 Alarm ICON appears on the Hand Control.

General Troubleshooting	Additional Information
Primary Hand Control unplugged or not completely seated.	1. Ensure primary Hand Control is plugged into Surgical Table. 2. Restart Surgical Table by pressing the STOP button followed by any command button. 3. Test table with known working Hand Control from another table. Replace faulty Hand Control if this corrects alarm. 4. If problem persists, contact STERIS.

6.83 Wrong Use — ALM

Condition

Message appears on Hand Control — Wrong Use.

General Troubleshooting	Additional Information
Control senses Hand Control pushbutton is pressed and held for longer than one minute.	1. Release button and retry desired function. 2. Defective button on Hand Control. Replace Hand Control.

Routine Maintenance

7.1 Read Before Performing Routine Maintenance

WARNING

PERSONAL INJURY AND/OR EQUIPMENT DAMAGE HAZARD

Repairs and adjustments to this equipment must be made only by STERIS or STERIS-trained service personnel. Maintenance performed by unqualified personnel or installation of unauthorized parts could cause personal injury, result in improper equipment performance, invalidate the warranty, or result in costly damage. Contact STERIS regarding service options.

Regularly scheduled preventive maintenance is required for safe and reliable operation of this equipment. Contact STERIS to schedule preventive maintenance.

Do not service or perform maintenance on equipment while in use.

The routine maintenance procedures described in this section of the manual should be performed regularly at the indicated intervals. Surgical Table usage may require more frequent maintenance than indicated. Refer to **Replacement Parts** Section for common replacement parts and to the **Illustrated Parts Breakdown** Section of the Maintenance Manual for parts not listed in the table [as well as for location reference] if needed. Any maintenance procedures not included in this section should be performed only by STERIS-trained service personnel fully acquainted with the Surgical Table.

NOTE: Anytime table covers have been removed, the table must be resealed as noted in the section, **Sealing Table Covers**.

The following preventive maintenance advisories must be observed:

1. **Under no circumstances should this equipment be serviced without the Maintenance Manual. This (use of Maintenance Manual) also meets requirements for essential performance and compliance with electromagnetic compatibility.**
2. **The Maintenance Manual can be purchased by contacting STERIS Customer Service.**
3. **A detailed Preventive Maintenance schedule and replacement parts list can be found in the Maintenance Manual.**
4. **Preventive Maintenance is essential in keeping this equipment in optimal working condition. STERIS recommends establishing an annual maintenance agreement with STERIS service.**
5. **Customer should maintain a record of all maintenance procedures performed on the Table.**
6. **If a problem associated with an Error Code occurs, refer to the Troubleshooting Section.**
7. **Preventive Maintenance and regular service must be performed according to the Maintenance Manual to comply with the requirements for essential performance and compliance with electromagnetic compatibility.**
8. **The Maintenance Manual describes the steps necessary for checking and replenishing the hydraulic oil.**

   NOTE: Never permit unqualified persons to service this Surgical Table and Preventive Maintenance is not covered under warranty.

7.2 Cleaning Table

This section includes the following:

Introduction

General

After Each Usage

End-of-Day

Weekly

Introduction

WARNING

INFECTION HAZARD

To protect against aerosols being reflected from contaminated surfaces, wear rubber or plastic gloves, masks, and eye protection and follow OSHA blood-borne pathogens standards when cleaning.

When cleaning/disinfecting Surgical Table, do not use alcohol which does not have sufficient cleaning/ disinfection properties.

WARNING

PERSONAL INJURY HAZARD

When cleaning/disinfecting this Surgical Table, do not use phenolics, which may cause patient skin burns if inadequately rinsed off, or alcohol, which does not have sufficient cleaning/ disinfection properties.

CAUTION

POSSIBLE EQUIPMENT DAMAGE

Cleaning procedures requiring articulation of the Surgical Table should be performed only by persons familiar with table operation.

Do not spray cleaning fluid into electric receptacles and avoid spraying directly on emergency backup buttons or into clearance space. Spray or drippage may settle onto electric circuits inside table causing corrosion and loss of function.

Hang the hand control from side rail of the Surgical Table when not in use to avoid possible damage to the control.

⚠ After performing cleaning procedures, ensure pads, tabletop, and X-Ray tops are completely dry before reinstalling. Failure to do so can result in damage to tabletop and pads. Moisture trapped between pads and X-Ray tops may contribute to equipment damage, such as X-Ray top warpage.

⚠ When cleaning/disinfecting Surgical Table, thoroughly read the cleaning fluid directions for use and follow all directions and cautions as shown.

NOTE: The user must follow the requirements of the national committee responsible for hygiene and disinfection when cleaning table. Disinfectants can be used in spray or wipe applications. Enzymatic cleaners should be applied with a disposable cloth and not sprayed (and thoroughly rinsed with a clean, damp, lint-free cloth to remove residue).

When cleaning table and pads, note the following:

1. **Use of any disinfectant solution OTHER than those listed below may cause discoloration or deterioration of pad surface:**
   - **Coverage® Plus Germicidal Surface Wipes Disinfecting/ Deodorizing/Cleaning Wipes**
   - **Quaternary Ammonium Compound (Quats) with Ethanol solvent**
   - **Quaternary Ammonium Compound (Quats) with Isopropyl Alcohol (IPA) solvent**
   - **Quaternary Ammonium Compound (Quats) with IPA + 2- Butoxyethanol solvent**
   - **Quaternary Ammonium Compound (Quats) + Biguanide**
   - **H2O2 (Hydrogen Peroxide)**
   - **Neutral Cleaners**
2. **The use of H2O2 + PAA (Hydrogen Peroxide + Peracetic Acid) is strongly discouraged for use on all STERIS products.**
3. **Always follow manufacturer instructions for concentrations and use of cleaning products.**
4. **Avoid discoloration of hand control keypad and display. Do not clean hand control with povidone-iodine solutions or allow such solutions to contact keypad and display surfaces.**
5. **Ensure no excess fluids remain on pads or table top surfaces during and after cleaning.**
6. **DO NOT SPRAY any cleaning product directly onto hand control or any system components. For other system components, dampen a clean, soft cloth with the cleaning solution and wring out the excess moisture.**
7. **If recommended cleaning products are not available in your area, use a neutral disinfectant or a disinfectant with a sodium hypochlorite solution (0.1% or 1000 parts per million available chlorine).**

General

Use the following materials to perform cleaning procedures described in this section:

- **Several clean, dry, lint-free cloths.**
- **Container of clean water.**
- **Prepare approved cleaning or disinfecting solutions as directed on product label.**

To ensure prolonged use of STERIS mattresses and pads, abide by following cleaning instructions:

1. **Inspect mattress prior to and/or after use to check for mattress integrity.**
2. **Follow cleaning frequency per facility protocol; however, clean all stains promptly.**
3. **Use hospital-grade low-level disinfectant cleaning agent appropriate for soft materials.**
4. **For special considerations such as large volume blood spills, contamination or exposure to high risk tissue and fluids or C. difficile, mattresses and pads may be cleaned with an intermediate to high level distinction dilution rate of 10% or 1:10 dilution rate of household beach (5.25% or 6% sodium hypochlorite) also expressed as 5000 parts per million of available chlorine, as recommended by the CDC and AORN guidelines.**

   NOTE: This dilution rate or higher is not the recommendation for routine use and requires a damp cloth water rinse post cleaning.
5. **Dilute all cleaners, disinfectants and germicides in accordance with manufacturers' instructions.**
6. **Use a soft sponge, cloth or wipe to clean, avoiding hard bristle or abrasive brushes.**
7. **Allow adequate drying time before returning mattress to table or accessory surface and placing into service.**
8. **Avoid applying strong adhesive tape directly to mattress surface, as pulling and tearing may affect integrity of mattress material.**
9. **Some cleaning agents leave a residue which can build up over time. Depending on cleaning agent, it may be necessary to rinse and wipe clean with a slightly damp cloth.**
10. **Some procedures performed on table mattresses or pads may involve excessive fluid exposure. Be sure to drape accordingly.**

STERIS also recommends the following precautions for mattresses and pads:

1. **Do not pull, tear, rip, or cut Vent flap tag as it is an integral mattress part.**
2. **Do not machine wash or machine dry.**
3. **Do not use harsh cleaners or solvents including moderate to high concentrations of alcohol.**
4. **Do not use staining or color stripping chemicals or iodophor type disinfectants, such as Betadine or improperly diluted bleach, which can affect fabric finish, color and possibly fabric strength.**
5. **Do not use undiluted or improperly diluted bleach or concentrated cleaning agents.**
6. **Do not allow any cleaning agent to remain in contact with fabric for a prolonged time or beyond cleaning agent manufacturer's recommendations.**
7. **Do not fail to adequately rinse cleaning agent or disinfectant from fabric.**

After Each Usage

IMPORTANT: *Read all Safety Precautions presented in Introduction section.*

After each use of the Surgical Table, clean/disinfect as follows:

NOTE: Ensure all protective covers are installed over any open receptacles.

1. **Remove gross soil with a disposable cloth and place used cloth in an appropriate biohazardous waste disposal container.**
2. **Clean tabletop and pads as follows:**
   a. **Articulate tabletop to level and place at comfortable working height.**
   b. **Gently "peel" pad away from tabletop fastening strips and place on another table or flat surface.**
   c. **Hold can 6-8" (152-203 mm) from surface and spray cleaning fluid liberally on top and sides of pads or wipe with a clean cloth dampened with cleaning solution. (It is recommended to clean only one pad at a time.) Carefully avoid any pad seams.**

d. Wipe dampened surfaces with a clean, lint-free cloth dampened with water to remove cleaning fluid (dampening cloth minimizes streaking).

e. Wipe dampened surfaces with a clean, lint-free cloth dampened with water to remove cleaning fluid (dampening cloth minimizes streaking).

f. Wipe cleaned surfaces again with clean, dry, lint-free cloth to remove all moisture.

g. Repeat *Step c*, *Step d*, and *Step e* for other pads. Repeat *Step c*, *Step d*, *Step e*, and *Step f* for tabletop surfaces exposed when pads are removed. Thoroughly dry bottom of pads and tabletop surfaces.

h. Place pads back onto tabletop by aligning with sides of table and pressing into place on fastening strips.

3. Raise table to maximum height to access lower surfaces.
4. Clean yoke, shrouds and entire base surface as follows:

   a. Hold can 6-8" (152-203 mm) from surface and spray cleaning fluid liberally on yoke and shrouds. Avoid spraying in direction of connectors.

   b. Wipe sprayed surfaces with a clean, lint-free cloth dampened with water to remove cleaning fluid (dampening cloth minimizes streaking).

   c. Wipe cleaned surfaces again with a clean, damp, lint-free cloth to remove residue.

   d. Repeat *Step a*, *Step b*, and *Step c* for base surface.

5. Turn hand control OFF and clean as follows:

   NOTE: Do NOT immerse hand control in liquid.

   a. Hold can 6-8" (152-203 mm) from surface and spray cleaning fluid liberally on hand control.

   b. Wipe sprayed surfaces with a clean, lint-free cloth dampened with water to remove cleaning fluid (dampening cloth minimizes streaking).

End-of-Day

At the end of each day, perform the cleaning procedures as outlined in *After Each Usage*.

Weekly

After each weekly use of this Surgical Table, clean/ disinfect table as follows:

1. Perform *Steps 1* through *4* of *After Each Usage*.
2. Check table casters and floor locks for any accumulated debris and clean as follows:

   a. Ensure floor locks are properly engaged (raising casters off floor).

   b. Hold cleaner spray can 6-8" (152-203 mm) from caster and spray cleaning fluid liberally on the caster.

   c. Wipe caster with a cloth, dampened with water, to remove cleaning fluid and debris.

   d. Perform *Step b* and *Step c* for remaining three casters.

3. Articulate table through all movements and clean all additional surfaces exposed during these articulations as follows:

   a. Hold spray cleaner can 6-8" (152-203 mm) from surface to be cleaned and spray cleaning fluid liberally on surface.

   b. Wipe sprayed surfaces with a clean, lint-free cloth, dampened with water to remove cleaning fluid.

   c. Wipe cleaned surfaces again with a clean, damp, lint-free cloth to remove any remaining residue.

4. Turn hand control OFF when finished with cleaning procedure.
5. Perform Step 5 of *After Each Usage*.

7.3 Bi-Weekly Maintenance

Operate this Surgical Table to verify all functions perform correctly. Operation must be smooth and quiet. If table operation is not smooth, have a qualified technician repair the table. Never permit inexperienced, unqualified persons to attempt to make any repairs to the table.

7.4 Battery Charging

This section includes the following:

What You Should Know Before Charging the Batteries

Battery Charging Procedure

What You Should Know Before Charging the Batteries

This Surgical Table is equipped with INTELLIPOWER® dual power system. The table is powered either by facility power or by internal batteries. If table is to be operated on battery power, note the following:

IMPORTANT: *Batteries are recharged automatically as long as the Main Power Switch is set to ON and the ac supply power is connected to the table. The PLUG icon appears on Power Panel LED Display (see Figure 7-1) indicating ac power and the diode bar indicates battery condition:*

- **When table is plugged into facility ac and Main Power Switch is ON, the diode bar shows battery charge state. This battery charge state is also indicated by icon on primary hand control.**
- **When table is on battery power and primary hand control is active (on), the diode bar shows battery charge state. This battery charge state is also indicated by icon on primary hand control.**

Batteries require recharging on a periodic basis depending on frequency of table usage. Low or discharged battery conditions are indicated by HALF FILLED or EMPTY BATTERY icon on the Hand Control and some or all green diode bars on Power Panel LED Display are OFF.

NOTE: Maximum life expectancy for a battery that has a history of proper care and charging is 4 years. More frequent battery replacement will be required if charging recommendations are not followed. Fully charged batteries enable between 100 and 150 procedures (approximately three weeks) without recharging. Note the charge/discharge icon on the LED Display (see *Figure 7-1*) of Power Panel. When two green diode bars on Power Panel LED Display are OFF, batteries are half charged. This level of power enables normal table operation without damaging the batteries. However, when the last green diode bar is OFF, batteries must be recharged without further delay or battery damage occurs. If all diodes are OFF, batteries are completely drained and the table can only operate on main facility power.

Lead acid batteries last longer if they are not permitted to fully discharge. Therefore, to obtain the longest life and capacity from the table batteries, always connect ac power cord to table base and plug into an appropriate ac receptacle as often as possible, and as long as possible, with the Main Power Switch set to **ON**. If this is not always possible, recharge batteries at the following times:

- **Every 15 days when the table is in normal service; more often if usage demands.**
- **Whenever HALF FILLED BATTERY icon appears on LCD Status Control Indicator.**
- **If the table remains in extended storage for longer than three months; batteries must be charged every three months.**

NOTE: If the sealed lead-acid gel electrolyte-type batteries do not charge, check for the following:

1. **Battery fuse is blown - replace the fuse (refer to Installing Battery Fuse (F8) section of Installation).**
2. **Ac power cord is defective - replace if necessary.**
3. **Main Power Switch is OFF (not illuminated).**
4. **Charger Circuit is not operating.**

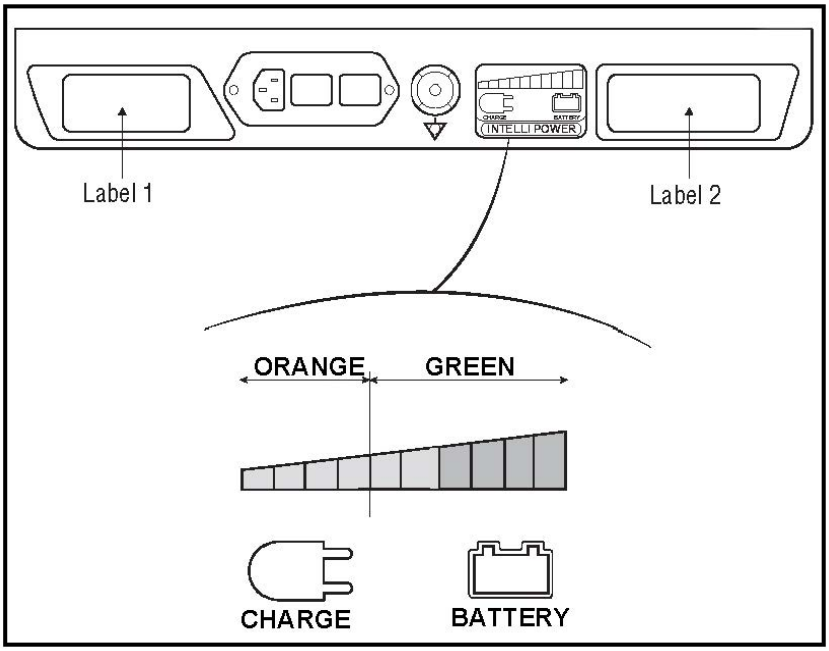

Figure 7-1. INTELLIPOWER Panel LED Display

Battery Charging Procedure

WARNING

PERSONAL INJURY AND/OR EQUIPMENT DAMAGE HAZARD

Repairs and adjustments to this equipment must be made only by STERIS or STERIS-trained service personnel. Maintenance performed by unqualified personnel or installation of unauthorized parts could cause personal injury, result in improper equipment performance, invalidate the warranty, or result in costly damage. Contact STERIS regarding service options.

WARNING

TRIPPING HAZARD

Route the power cord to the receptacle to minimize being tripped over by personnel in the area.

Recharge batteries as follows:

1. **Connect ac power cord to table base and plug into an appropriate Facility ac receptacle.**
2. **Turn Main Power Switch to ON.**
3. **Allow approximately 12 hours for full battery charge.**
4. **Verify FILLED BATTERY icon on hand control. Disconnect ac power.**

7.5 Auto Limit Sensor (ALS) Check

WARNING

PERSONAL INJURY AND/OR EQUIPMENT DAMAGE HAZARD

The Auto Limit Sensors (ALS) System suggested alternative tabletop movement does not take into account the type of surgery that may be in process or the environment (e.g., other equipment close by) and might not be compatible with the surgical procedure. To avoid an action that could result in death or serious injury to the patient and the operating room staff, and/or serious equipment damage, completely evaluate the feasibility of the suggestion.

The table is equipped with the Auto Limit Sensor system (ALS) which provides instant user feedback on conflicting tabletop articulations. An ALS warning on the hand control indicates the tabletop has been ordered into a configuration or has moved into a position that may cause tabletop damage or patient injury.

To prevent a tabletop sectional conflict, or collision of tabletop with the table or floor, the ALS System immediately stops the movement in process and the ALS LED lights. The control system alerts the user to an alternative movement choice in the LCD Display.

NOTE: The ALS System suggested alternative movement is not the only movement available. Users should exercise professional judgment in determining the most desirable movement.

Test the Auto Limit Sensor system as follows:

1. **Review and follow instructions presented in Before Using the Table Section, and prepare the table for operation.**
2. **Raise tabletop to highest position possible.**
3. **Use SLIDE HEAD and move tabletop to head end limit.**
4. **Press LEG DOWN button until ALS Warning lights and tabletop motion stops. If system does not engage, stop tabletop movement before collision and call STERIS.**

7.6 LEVEL Check

Check the tabletop LEVEL function as follows:

1. **Review and follow instructions presented in Before Using the Table Section.**
2. **Press LEVEL pushbutton.**

   NOTE: When operating in REVERSE ORIENTATION, LEVEL function does NOT include the back section for compliance with anesthesia procedures. Ensure REV. ORIENT (reverse orientation) is not active.
3. **When depressed, tabletop is gradually returned to level or horizontal position by aligning tabletop sections in following order:**
   a. **KIDNEY Elevator and lateral tilt.**
   b. **Trendelenburg and back.**
   c. **Leg.**
4. **Use a level and ensure tabletop is level. If not, call STERIS.**

7.7 Auxiliary Control Check

Check the Surgical Table auxiliary control system as follows:

1. **Review and follow instructions presented in** *Section 5.5, Backup (Override) Control System* **and prepare the table for auxiliary control system operation.**
2. **With tabletop at extreme low height, press HEIGHT UP pushbutton and pump pedal.**
3. **Ensure tabletop raises correctly. If not, call STERIS.**

7.8 Sealing Table Covers

This section includes the following:

Introduction

Two-Part Base Cover (Stainless Steel)

One-Part Base Cover (Plastic)

Introduction

Whenever the Surgical Table Column cover assembly and/or Base cover are removed and then returned, the covers need sealed to prevent fluid intrusion to meet IPX4 requirements.

NOTE: Remove all old sealant and clean all mating parts before reapplying the silicone sealant. Use RTV 123 Black Silicone Sealant (R005300568).

Two-Part Base Cover (Stainless Steel)

NOTE: To aid in loosening RTV between stainless-steel base covers for future procedures, spray Dry Lubricant Spray NG 202 (P752870091) along the front base shroud edge that contacts the RTV before applying the RTV.

1. **Apply 1/4 x 3/4" closed cell foam tape (R007200964) to top of mounting brackets (see *Figure 7-2*). Do not apply tape to portion of table base where plastic cover touches base (see *Figure 7-3*).**



Figure 7-2. Apply Tape to Mounting Bracket

2. **Install base cover. Ensure base cover sits flush on base (see *Figure 7-3*) at base cover insert opening.**



Figure 7-3. Ensure Base Cover Sits Flush on Base at Insert Opening

3. **Seal mating areas between front and rear base covers as shown in *Figure 7-4*.**

   NOTE: Ensure RTV is applied to both left and right sides of base covers before assembly.

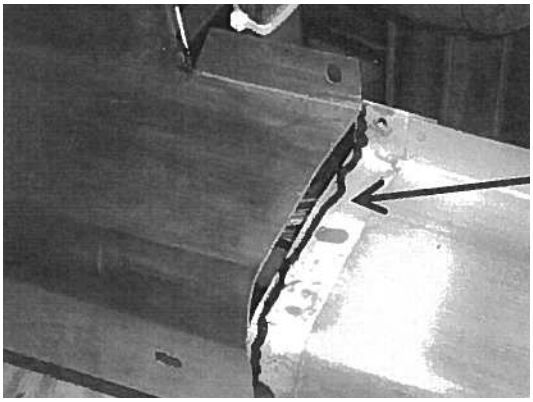

Figure 7-4. Seal Mating Areas Between Front and Rear Base Covers

4. Apply RTV to bottom of each V-shaped cut-out around interface with column covers (see *Figure 7-5*).

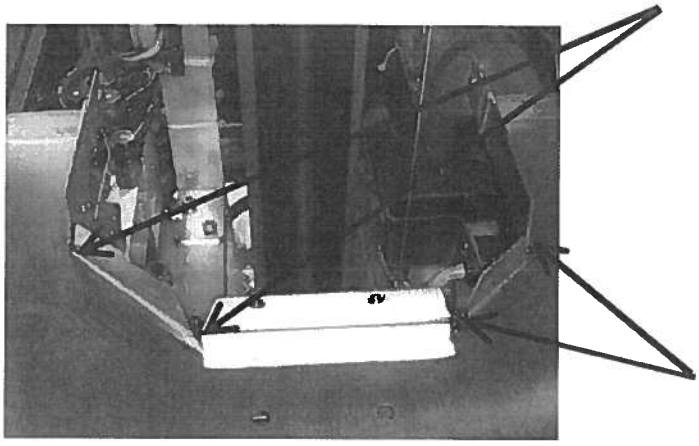

Figure 7-5. Apply RTV to V-Shaped Cut-Outs

5. Seal area where power supply inlet is exposed through base (see *Figure 7-6*).



Figure 7-6. Seal Cover Around Power Inlet

6. Seal around entire perimeter between upper plastic column covers and column ensuring to fill entire gap as shown in *Figure 7-7*. Smooth out RTV as much as possible.



Figure 7-7. Seal Around Upper Plastic Covers and Column

7. Seal along both seams of upper plastic column covers as shown in *Figure 7-8*.

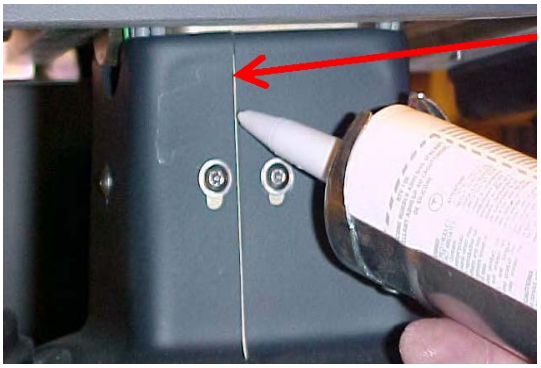

Figure 7-8. Seal Along Both Seams of Upper Plastic Column Covers

8. Install lower (inner) column cover around column.
9. Snap halves together and fasten using previously removed screw. Repeat for all column covers.
10. Secure upper (outer) cover to bracket using six existing fasteners.
11. Secure lower cover to base using four existing fasteners.
12. Secure base cover to base using screw and spacer.
13. Ensure telescoping column covers move smoothly and do not separate during operation.
14. After applying RTV, remove any excess sealant using an alcohol dampened rag.
15. Allow sufficient cure time as recommended by the RTV manufacturer before returning table for use.

One-Part Base Cover (Plastic)

1. Seal area where power supply inlet is exposed through base (see following illustration).



2. Install base cover insert and fasten to base cover (see *Figure 7-9*).



Figure 7-9. Install Base Cover Insert and Attach to Base Cover

3. Apply RTV to seam between base cover insert and base cover (see *Figure 7-10*).



Figure 7-10. Seal Seam Between Base Cover Insert and Base Cover

4. Apply RTV around base perimeter where column shrouds attach.
5. Seal around entire perimeter between upper plastic column covers and column ensuring to fill entire gap as shown in following illustration. Smooth out RTV as much as possible.



6. Seal along both seams of upper plastic column covers as shown in following illustration.

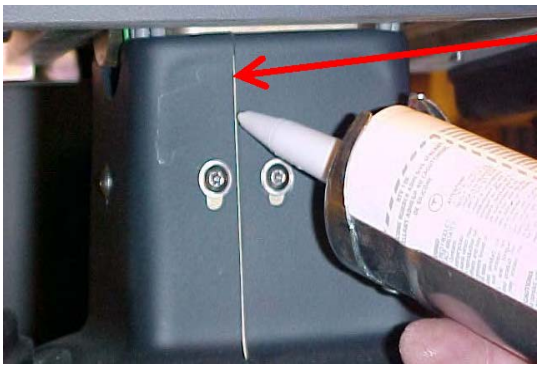

7. After applying RTV, remove any excess sealant using an alcohol dampened rag.
8. Allow sufficient cure time as recommended by the RTV manufacturer before returning table for use.

7.9 Replacement Parts

The parts listed in this section are required for minor maintenance on the surgical table.

To order replacement parts, proceed as follows:

1. Include part number and description listed in either *Table 7-1* or *Table 7-2*.
2. Include model and serial numbers of your equipment on your order.
3. Send your order directly to STERIS.

   NOTE: For Replacement Parts, note the following:

   a. Use only STERIS authorized parts on the equipment. Use of unauthorized parts voids the warranty.

   b. This table uses lead-acid batteries. Lead-acid batteries normally are subject to self-discharge and battery-life deterioration in long-term storage. Therefore, STERIS does not recommend that batteries be procured and then stored as spare parts. If batteries are procured and stored, they should be kept covered and in a cool, dry area. Stored batteries must be recharged every six months to minimize deterioration. Use a charging current commensurate with the battery amp-hour size. Charge to a floating charge voltage equivalent to 13.6-13.8 volts.

Table 7-1. Replacement Parts

DESCRIPTION	PART NUMBER	RECOMMENDED SPARES
Hand Control Assembly	P141210773	1
Replacement Hand Control Cable	P141210807	1
Power Cord	P093909354	1
Fuse (Main), 3.0 Amp	693600038	1
Fuse (Set)	342213555	1
Battery	P764331223	N/A

Table 7-2. Replacement Parts, Pads

TLT Pads (Hook-and-Loop), 2" *	**PART NUMBER**	**RECOMMENDED SPARES**
▪ **Pad, Head Section**	P150832695	1
▪ **Pad, Back/Seat Section**	413724464	1
▪ **Pad, Leg Section**	413724465	1
PRS Pads (Mushroom-Type), 2"*	**PART NUMBER**	**RECOMMENDED SPARES**
▪ **Pad, Head Section**	P134469542	1
▪ **Pad, Back/Seat Section**	P141210677	1
▪ **Pad, Leg Section**	P134469543	1
* 2", 3", and 4" tabletop pads available; contact STERIS or refer to **Illustrated Parts Breakdown** Section of Maintenance Manual.		

Appendix A - EMC Compliance

8.1 EMC Compliance Technical Data

The STERIS 4095 General Surgical Table is designed for most surgical procedures with maximum radiological access without patient reversing. The STERIS 4095 General Surgical Table and related components are intended for use in the electromagnetic environment specified in *Table 8-1* through *Table 8-4*. The Customer or the user should ensure this table is used in such an environment.

NOTE: Review all EMC safety precautions listed below before operating the STERIS 4095 General Surgical Table within the surgical suite.

CAUTION

POSSIBLE EQUIPMENT DAMAGE

⚠ Appropriate components of this Surgical Table have been tested and found in compliance with IEC 60601-1-2, Medical Electrical Equipment Part 1; General Requirements for Safety; Electromagnetic Compatibility (EMC). There is, however, a potential for electromagnetic or other interference between this equipment and other devices. Should user experience interference, relocate this device or minimize the use of the affected equipment while this device is in operation.

⚠ Surgical Table operation may be temporarily affected if portable or mobile RF communications equipment is used in close proximity.

⚠ Medical Electrical Equipment needs special precautions regarding EMC. Put Surgical Table into service according to the EMC information provided in this manual.

⚠ Possible EMC increased EMISSIONS or decreased IMMUNITY. Do not use accessories or replacement parts not listed in the Operator or Maintenance Manuals.

⚠ Surgical Table operation may be affected if used adjacent to or stacked with other equipment. If adjacent or stacked use is needed, ensure table operates properly in this configuration.

Table 8-1. Guidance and Manufacturer s Declaration Electromagnetic Emissions For All Equipment and Systems (per IEC 60601−1−2, Clause 5.2.2.1)

Emissions Test	Compliance	Electromagnetic Environment Guidance
The STERIS 4095 General Surgical Table and related components are intended for use in the electromagnetic environment specified below. The Customer or the user should ensure this STERIS 4095 General Surgical Table is used in such an environment.		
RF emissionsCISPR 11	Group 1	The STERIS 4095 General Surgical Table uses RF energy only for its internal function. Therefore, its RF emissions

Table 8-1. Guidance and Manufacturer s Declaration Electromagnetic Emissions For All Equipment and Systems (per IEC 60601–1–2, Clause 5.2.2.1) (continued)

Emissions Test	Compliance	Electromagnetic Environment Guidance
		are very low and are not likely to cause any interference in nearby electronic equipment.
RF emissionsCISPR 11	Class A	The STERIS 4095 General Surgical Table is suitable for use in all establishments, other than domestic and those directly connected to the public low-voltage power supply network that supplies buildings used for domestic purposes.
Harmonic emissionsIEC 61000-3-2	Class A	
Voltage fluctuations/flicker emissions IEC 61000-3-3	Complies	

NOTE: The emissions characteristics of this equipment make it suitable for use in industrial areas and hospitals (CISPR 11 Class A). If it is used in a residential environment (for which CISPR 11 Class B is required) this equipment might not offer adequate protection to radio frequency communication services. The user might need to take mitigation measures, such as relocating or re-orienting the equipment.

Table 8-2. Guidance and Manufacturer s Declaration Electromagnetic Immunity For All Equipment and Systems (per IEC 60601–1–2, Clause 5.2.2.1)

Immunity Test	60601-1-2 Test Level	Compliance Level	Electromagnetic Environment Guidance
The STERIS 4095 General Surgical Table and related components are intended for use in the electromagnetic environment specified below. The Customer or the user should ensure this STERIS 4095 General Surgical Table is used in such an environment.			
Electrostatic discharge (ESD) IEC 61000-4-2	±8 kV contact	±8 kV contact	Floors should be wood, concrete or ceramic tile. If floors are covered with synthetic material, the relative humidity should be at least 30%.
	±15 kV air	±15 kV air	
Electrical fast transient/burst IEC 61000-4-4	±2 kV for power supply lines	±2 kV for power supply lines	Mains power quality should be that of a typical commercial or hospital environment.
	±1 kV for input/output lines	±1 kV for input/output lines	
Surge IEC 61000-4-5	±1 kV differential Mode	±1 kV differential Mode	Mains power quality should be that of a typical commercial or hospital environment.
	±2 kV common mode	±2 kV common mode	
Voltage Dips/Dropout IEC 61000-4-11	0% UT for 0.5 cycle	>95% Dip for 0.5 Cycle	Mains power quality should be that of a typical commercial or hospital environment. If the user of the STERIS 4095 General Surgical Table requires continued
		60% Dip for	

Table 8-2. Guidance and Manufacturer s Declaration Electromagnetic Immunity For All Equipment and Systems (per IEC 60601–1–2, Clause 5.2.2.1) (continued)

Immunity Test	60601-1-2 Test Level	Compliance Level	Electromagnetic Environment Guidance
	@ 0, 45, 90, 135, 180, 225, 270 and 315 degrees.	5 Cycles	operation during power mains interruptions, it is recommended that the STERIS 4095 General Surgical Table be powered from the equipped internal battery.
	0% UT for 1 cycle	30% Dip for 25 Cycles	
		>95% Dip for 5 Seconds	
		———————————————————	
		0% UT for 0.5 cycle @ 0, 45, 90, 135, 180, 225, 270 and 315 degrees.	**(Tested at UT = to 240 Vac and UT= 100 Vac, 50 Hz for each all test levels).**
		0% UT for 1 cycle	
Power frequency (50/60 Hz) magnetic field IEC 61000-4-8	30 A/m	30 A/m	Power frequency magnetic fields should be at levels characteristic of a typical location in a typical commercial or hospital environment.
NOTE: UT is the ac mains voltage prior to application of the test level.			

Table 8-3. Guidance and Manufacturer s Declaration Electromagnetic Immunity For Equipment and Systems That Are Not Life-Supporting (per IEC 60601–1–2, Clause 5.2.2.1)

Immunity Test	60601-1-2 Test Level	Compliance Level	Electromagnetic Environment Guidance
The STERIS 4095 General Surgical Table and related components are intended for use in the electromagnetic environment specified below. The Customer or the user should ensure this STERIS 4095 General Surgical Table is used in such an environment.			
Power frequency (50/60 Hz) magnetic field IEC 61000-4-8			Portable and mobile RF communications equipment should be separated from the STERIS 4095 General Surgical Table, including cables, no less than the distance calculated/listed below:
			D=(3.5/V1)(Sqrt P)

Table 8-3. Guidance and Manufacturer s Declaration Electromagnetic Immunity For Equipment and Systems That Are Not Life-Supporting (per IEC 60601–1–2, Clause 5.2.2.1) (continued)

Immunity Test	60601-1-2 Test Level	Compliance Level	Electromagnetic Environment Guidance
			D=(12/V2)(Sqrt P)
Conducted RF IEC 61000-4-6	3 Vrms (Outside ISM) 6Vrms (In ISM Bands) 150 kHz to 80 MHz	(V1) = 3 Vrms (V2) = 6 Vrms (V3) = 10 Vrms	D=(12/E1)(Sqrt P) 80 to 800 MHz
			D=(23/E1)(Sqrt P) 800 MHz to 2.7 GHz
Radiated RF IEC 61000-4-3	3 V/m	(E1) = 3 V/m	where P is the max power in watts and D is the recommended separation distance in meters.
	80 MHz to 2.7 GHz		Field strengths from fixed transmitters, as determined by an electromagnetic site survey, should be less than the compliance levels (V1 and E1).
			Interference may occur in the vicinity of equipment containing a transmitter.
Proximity Magnetic IEC **61000-4-39**	8A/m or 138.06dBµA/m (30 kHz) 65A/m or 156.26dBµA/m (134.2kHz) 7.5A/m or 137.5dBµA/m (13.56MHz)		8A/m test only applies to Home Healthcare Fields

Table 8-4. Recommended Separation Distances Between Portable and Mobile RF Communications Equipment and STERIS 4095 General Surgical Table (per IEC 60601–1–2, Clause 5.2.2.1)

Rated maximum output power of transmitter W	Separation distance according to frequency of transmitter m		
	150 kHz to 80 MHz $d = [\frac{3,5}{3}]\sqrt{P}$	80 MHz to 800 MHz $d = [\frac{3,5}{3}]\sqrt{P}$	800 MHz to 2.5 GHz $d = [\frac{7}{3}]\sqrt{P}$
The STERIS 4095 General Surgical Table and related components are intended for use in the electromagnetic environment in which radiated RF disturbances are controlled. The Customer or the user can help prevent electromagnetic interference by maintaining a minimum distance between portable and mobile RF communications equipment (transmitters) and this STERIS 4095 General Surgical Table as recommended below, according to the minimum output power of the communications equipment.			
0,01	0.12	0.12	0.23

Table 8-4. Recommended Separation Distances Between Portable and Mobile RF Communications Equipment and STERIS 4095 General Surgical Table (per IEC 60601–1–2, Clause 5.2.2.1) (continued)

Rated maximum output power of transmitter W	Separation distance according to frequency of transmitter m		
	150 kHz to 80 MHz $d = [\frac{3,5}{3}]\sqrt{P}$	80 MHz to 800 MHz $d = [\frac{3,5}{3}]\sqrt{P}$	800 MHz to 2.5 GHz $d = [\frac{7}{3}]\sqrt{P}$
0,1	0.38	0.38	0.73
1	1.2	1.2	2.3
10	3.8	3.8	7.3
100	12	12	23
For transmitters rated at a maximum output power not listed above, the recommended separation distance d in metres (m) can be estimated using the equation applicable to the frequency of the transmitter, where P is the maximum output power rating of the transmitter in watts (W) according to the transmitter manufacturer.			
NOTE: At 80 MHz and 800 MHz, the separation distance for the higher frequency range applies. **NOTE: These guidelines may not apply in all situations. Electromagnetic propagation is affected by absorption and reflection from structures, objects and people.**			

Recommendation regarding use of high frequency (HF) surgical equipment (per IEC 60601-2-46):

1. **The 4095 Surgical Table is intended for use with high frequency surgical equipment.**
2. **If degradation of performance is noted the HF surgical equipment leads and return plates must be reoriented to a more favorable position.**

Statement regarding X-Ray Attenuation:

The aluminum equivalence for the table top and the x-ray top is 2 millimeters.

WARNING

The presence of any material in the x-ray beam will introduce diffusion and scattering effects. Operators should take appropriate precautions against x-ray exposure. Material placed in the path of an x-ray beam will attenuate the x-ray intensity. The x-ray beam intensity must not exceed safe patient levels.

WARNING

Portable RF communications equipment (including peripherals such as antenna cables and external antennas) should be used no closer than 30 cm (12 inches) to any part of the 4095 General Surgical Table, including cables specified by the STERIS. Otherwise, degradation of the performance of this equipment could result.

Examples of portable RF communications equipment include TETRA 400, GMRS 460, FRS 460, LTE Band 13 and 17, GSM 800/900, TETRA 800, iDEN 820, CDMA 850, LTE Band 5, GSM 1800, CDMA 1900, GSM 1900, DECT, LTE Band 1, 3, 4, 25; UMTS, Bluetooth, WLAN, 802.11 b/g/n, RFID 2450, LTE Band 7, and WLAN 802.11 a/n.