STERIS®



HarmonyAIR® A-Series

Surgical Lighting System

Operator Manual

en
11006301
Revision H

© 2025 STERIS. All rights reserved.

Published: 2025-1-27

A Word from STERIS Corporation

1.1 Indications for Use

The HarmonyAIR® A-Series Surgical Lighting System is a variable pattern, variable intensity surgical lighting fixture designed to provide visible illumination of the surgical field for the operating room staff.

1.2 Advisory

The following is an important message from STERIS about the advantages and limitations associated with the use of high intensity surgical lighting systems.

Because of the variety of surgical procedures performed and the wide range of individual preferences of surgical staffs, it is desirable that a surgical lighting system be capable of selective control across a wide range of illumination intensities. The Illuminating Engineering Society (IES) stresses that in addition to providing control of intensity, surgical lighting systems should provide shadow control, correct color rendition, and a suitable depth of field to provide sharp, consistent lighting into deep body cavities. As illumination levels increase, however, radiant heat also increases. Therefore, the IES cautions that for most operations, radiant heat should be kept to a minimum. The user of surgical lights should utilize the lowest possible illumination level suitable for the procedure, especially in certain neurological or intestinal procedures on delicate, thin, dry or abnormal tissue. Furthermore, for the protection of surgically exposed tissues and for the comfort and efficiency of the surgeon and assistants, radiant energy can be effectively controlled by limiting the time of exposure at higher illumination levels. Extra care must be taken when the light fields from multiple lightheads are overlapped on the surgical site, since this condition creates a risk of too much heat and excessive UV irradiance.

An international standard for the safety of surgical lights established by the International Electrotechnical Commission (IEC 60601-2-41) sets minimum and maximum levels of illumination and maximum levels of radiant heat that can be emitted from a single surgical luminaire. The HarmonyAIR A-Series Surgical Lighting System has been designed to comply with this international standard and to provide a wide range of illumination levels while minimizing the potentially damaging infrared heat in the surgical field. The optical radiation emitted by this product complies with the exposure limits for reducing the risk of photobiological hazards based in IEC 60601-2-41.

The illumination level of the lighthead can be adjusted through several intensity settings via conveniently located controls on either the wall-mounted control center or the lighthead handle. Maximum illuminance can reach 160 klx for the smallest pattern size of lighthead and can be adjusted by intensity control throughout the entire range specified by the IEC.

Serious incidents that have occurred in relation to this medical device should be reported to the manufacturer and competent authority in the country where the incident occurred.

The system includes both Class 1 and Class 3R lasers. The positioning lasers are Class 1. The video communication is Class 3R. Video communication should only be accessible during service.

1.3 Addresses

STERIS Ireland Limited
IDA Business and Technology Park
Tullamore
County Offaly

R35 X865 ■ Ireland

STERIS Corporation
2720 Gunter Park East
Montgomery, AL 36109 ▪ USA
334-277-6660/800-444-9009
www.steris.com

Class 1 Equipment

Ordinary Equipment (enclosed equipment without protection from ingress of water)

Equipment not suitable for use in the presence of a flammable anesthetic mixture with air or oxygen or nitrous oxide.

Suitable for continuous operation.

The base language of this document is ENGLISH. Any translations must be made from the base language document.

Waste of electrical and electronic equipment must not be disposed as unsorted municipal waste. It must be collected separately and must be disposed as per local regulations. Contact your authorized representative for information concerning the decommissioning of your equipment.

1.4 Associated Publications

Equipment Drawing Number	Equipment Drawing Title
11001640	HarmonyAIR A-Series Surgical Lighting System Installation Instructions
PS11006301	HarmonyAIR A-Series Surgical Lighting System Operator Manual
P764338–491	HarmonyAIR A-Series Surgical Lighting System Maintenance Manual

1.5 Waste Management Guidelines

The following materials are contained within the HarmonyAIR® A-Series Surgical Lighting System. When disposing of the light fixture or its parts, ensure proper disposal of hazardous and other regulated waste in compliance with national, state and local WEEE/RoHS regulations.

Electronic and Electrical Parts - not known to require special disposal methods at date of this manual.

Metal Parts - made from aluminum (Al), steel (Fe), cast iron (Fe), copper (Cu), and copper alloys (Cu/x), plastic, synthetic rubber, plating (Cr, Ni, Zn, Au), and adhesives not known to require special disposal methods at date of this manual.

Polyvinyl chloride (PVC) - The approximate weight of PVC within a HarmonyAIR A-Series Surgical Lighting System varies with configuration and options, ranging between 1.8 lb (0.9 kg) and 6.6 lb (3.0 kg).

TABLE OF CONTENTS

Section Number	Description	Page
1	**A Word from STERIS Corporation**	**iii**
1.1	Indications for Use	iii
1.2	Advisory	iii
1.3	Addresses	iv
1.4	Associated Publications	iv
1.5	Waste Management Guidelines	iv
2	**Symbols**	**1**
3	**Safety Precautions**	**4**
4	**Product Performance**	**10**
4.1	Lighthead Optical Performance	10
4.2	Essential Performance	11
4.3	Environmental Conditions	11
4.4	Power Requirements	12
5	**Post Installation Verification**	**13**
5.1	Introduction - Post Installation Verification	13
5.2	Introduction – Pre-operation Checklist	13
5.3	Check Suspension Movement	13
5.4	Monitor Arms	14
5.5	Check System Operation	16
5.6	Check Optional Video Camera Module Operation	18
5.7	Check Optional Monitor Arms	19
6	**Operating Instructions**	**21**
6.1	Light Control Center — Control Screen	21
6.2	Intensity Controls	22
6.3	Color Temperature Controls	24
6.4	Controlling Lights at Lighthead	24
6.5	Lighthead Features	26
6.6	Fault Display	27
6.7	Integrated Wall Control (IWC) Fault Log Indications	27
6.8	Lighthead Positioning	30
6.9	Lighthead Pattern Adjustment	31
6.10	Light Handle	32
6.11	Light Handle with Enhanced Handle Core	38
6.12	Installing Video Camera Module	46
6.13	Uninstalling Video Camera Module	47
6.14	Install Camera Disposable Sterile Cover	47
6.15	Video Camera	49
6.16	Camera Operation	50
6.17	Settings Screen	51
6.18	System Standby	57
6.19	Ambient Light Fixture	57
6.20	Monitor Arms	58
7	**Troubleshooting**	**61**
7.1	Operator Troubleshooting	61

7.2 Color Temperature Controls Do Not Appear on IWC 61
8 Maintenance 62
8.1 Cleaning Equipment 62
8.2 Sterilization Recommendation 63
8.3 General Cleaning/Disinfecting Procedure 63
8.4 Manual Cleaning Using Enzymatic Solution for Sterile and Non-Sterile Handle Body 65
8.5 Automated Cleaning Using Enzymatic Solution for Sterile and Non-Sterile Handle Body 65
8.6 Areas to Be Cleaned Before Each Use 66
8.7 Preventive Maintenance 67
8.8 Inspect Suspension 67
8.9 Inspect Integrated Wall Control (IWC) 67
9 Replacement Parts 68
10 EMC Compliance Technical Data for Wall Mounted IWC with Integrated Power Supplies 69

Symbols

The following symbols appear on the system.

Table 2-1. Symbol Definitions

Symbol	Definition
	ON-OFF
	Lighthead (designation and intensity)
	LED Module(s) Requires Service
	Protective Earth (Ground)
 or 	Attention, consult manual for further instructions
	Consult instructions before use
	Maximum Load Hazard (maximum load given on label)
	Hot, Potential Burn Hazard
	Serial Number of Unit
	Equipment or Reorder Number
	Batch Code
	Symbol Indicating the Legal Manufacturer Name and Address
	Symbol Indicating the Date of Manufacture (YYYY-MM-DD)
	Voltage Rating of Unit, Alternating Current
	Amperage Rating of Unit

Table 2-1 Symbol Definitions (Continued)

Symbol	Definition
	Frequency Rating of Unit
	Increase Intensity (Surgeon's Control Buttons or Wall Control)
	Decrease Intensity (Surgeon's Control Buttons or Wall Control)
	Camera ON/OFF indicator
	Zoom
	Rotate
	Manual Focus
	Auto Mode (Brightness or Focus)
	Potential Impact Hazard
	Potential Pinch-Point Hazard
	Keep Dry
	Single Use
	Do Not Use If Packaging Damaged
	Keep From Sunlight
	Use By Date
	Brightness
	Battery Backup
	Fault
	Laser Radiation

Table 2-1 Symbol Definitions (Continued)

Symbol	Definition
MD	Medical Device
UDI	Unique Device Identifier
CE 2797	CE Mark with Notified Body Reference Number
EC REP	Authorized Representative in the European Community
	Product Is Not Made With Natural Rubber Latex
STERILE EO	Sterilized Using Ethylene Oxide
	Single Sterile Barrier System
	Single Sterile Barrier System with Protective Packaging Outside

Safety Precautions

The following Safety Precautions must be observed when operating or servicing this equipment.

WARNING indicates the potential for personal injury.

CAUTION indicates the potential for damage to equipment.

It is important to review all Safety Precautions before operating or servicing the unit.

Strictly following these Safety Precautions enhances the Customer's ability to safely and effectively use the equipment and helps avoid improper maintenance methods which may damage the unit or render it unsafe. It is important to understand that these Safety Precautions are not exhaustive; Customers are encouraged to develop their own safety policies and procedures to enhance and complement these Safety Precautions.

Please read this Operator Manual to get the best understanding and to help ensure best performance of this equipment, which has been thoroughly inspected, tested and adjusted by factory-trained personnel. Equipment maintenance other than described in the manual (unless by authorized representatives of the STERIS Corporation), shall be at the risk of invalidating the equipment warranty.

To obtain authorized service call:

STERIS Corporation

Healthcare: 1-800-548-4873

NOTE: This device is a Class 3R Laser device and can cause damage to eye sight if used improperly. Refer to ANSI Z136 for proper handling and usage of Class 3R devices.

WARNING

EXPLOSION HAZARD

⚠ Do not use lighting fixture in the presence of flammable anesthetics.

WARNING

ELECTRIC SHOCK HAZARD

⚠ Do not remove covers or perform service other than as described in the Maintenance section of this operator manual. Refer servicing to qualified service personnel. (Maintenance Manual, P764338-491.)

⚠ Avoid possibility of electric shock, and refer any servicing of the ambient light fixture to qualified service personnel.

⚠ Avoid possibility of electric shock. This equipment must only be connected to a supply mains with protective earth.

⚠ The main breaker panel is to be used as means of mains isolation prior to installing or working on the ambient light system.

⚠ Connecting electrical equipment to ConnectPoint ac outlets effectively creates a medical electrical system per IEC 60601-1 definition and can reduce system safety.

WARNING

PINCHING HAZARD

⚠ Pinch points are created during extreme articulation of the suspension system. Do not place hands on or near the suspension knuckle during lighthead articulations and in the area around the monitor yoke mechanism cover.

WARNING

IMPACT HAZARD

⚠ Lighthead spring arms must be locked (using accompanying locking pin) prior to installing and/or removing lightheads. Removal of lightheads without use of the locking pin can cause serious injury.

⚠ Monitor/Auxiliary spring arms must be locked (using accompanying locking pin) prior to installing and/or removing monitor and/or monitor yoke. Removal of monitor and/or monitor yoke without use of the locking pin can cause serious injury.

⚠ Locking pin must be installed prior to removing or attaching spring arm. Removal of spring arms without the use of the locking pin can cause serious injury.

WARNING

POSSIBLE PATIENT INJURY HAZARD

⚠ Failure to engage the light handle cover completely may result in cover falling from lighthead during the procedure.

WARNING

BIOHAZARD

⚠ Sterile disposable covers are intended for single use only.

⚠ Universal disposal precautions must be observed when disposing of any single-use disposable item.

WARNING

PERSONAL INJURY HAZARD

⚠ When fiber optic video accessories are installed to the lighting system, do not operate system unless optical fiber cables are fully connected or properly covered.

⚠ Fiber optic components may contain 3R lasers. Energy may cause damage to the eye. Care and proper handling, including disconnecting power from fiber components, shall be observed.

⚠ Do not attempt to clean lighthead unless power is turned off and the lighthead has cooled sufficiently.

⚠ Do not attempt to adjust suspension system. Refer servicing to qualified service personnel.

⚠ This product emits possible hazardous optical radiation. Do not stare at the light emitted from the surgical luminaire. Eye injury may occur.

⚠ Do not attempt to replace LED modules on the lightheads. Refer servicing to qualified service personnel.

⚠ Do not remove monitor arm locking pin until monitor is installed.

⚠ Do not modify this equipment without authorization of the manufacturer.

⚠ Failure to engage the light handle body or disposable cover completely may result in body or disposable cover falling from lighthead during procedure.

WARNING

STERILITY ASSURANCE HAZARD

⚠ Sterile personnel shall not interact with the light handle unless light handle has been properly cleaned, sterilized, and installed OR covered with a disposable sterile cover.

⚠ Sterile personnel shall not interact with the camera unless a disposable sterile cover is installed.

⚠ Do not use disposable handle covers if the packaging has been damaged, torn or opened; as the sterility of the cover may be compromised.

WARNING

LASER RADIATION

⚠ CAUTION: Class 3R invisible laser radiation when any part of enclosure is opened and fiber cables are disconnected. Avoid direct eye exposure.

⚠ CAUTION: Use of controls or adjustments or performance of procedures other than those specified in the manual may result in hazardous radiation exposure.

⚠ CAUTION: CLASS 1 LASER PRODUCT

CAUTION

POSSIBLE EQUIPMENT DAMAGE

⚠ Cleaning and disinfecting agents used on this lighting system must be certified by their manufacturer to be compatible with the following materials: polycarbonate (PC), thermoplastic elastomer (TPE), silicone, syndiotactic polystyrene (SPS), acrylic (PMMA).

⚠ Use only recommended cleaning/disinfecting and/or anti-static agents on this light. Some degree of staining, pitting and/or discoloration could occur if a phenolic-, iodophor- or glutaraldehyde-based disinfectant is used on the surfaces of this lighthead. Also, alcohol-based or aerosol spray cleaner/ disinfectants containing a substantial amount of alcohol in the formula can damage the polycarbonate lens and acrylic sensors.

Use of any disinfectant solution OTHER than those listed here may cause discoloration or deformation on the lens surface and other system components:

- Coverage® Plus Germicidal Surface Wipes Disinfecting/Deodorizing/Cleaning Wipes
- Quaternary Ammonium Compound (Quats) with Ethanol solvent
- Quaternary Ammonium Compound (Quats) with Isopropyl Alcohol (IPA) solvent
- Quaternary Ammonium Compound (Quats) with IPA + 2-Butoxyethanol solvent
- Quaternary Ammonium Compound (Quats) + Biguanide
- H2O2 (Hydrogen Peroxide)
- Neutral Cleaners
- Hypochlorite (3 to 6% solution diluted 1:10 in water)

⚠ The use of H2O2 + PAA (Hydrogen Peroxide + Peracetic Acid) is strongly discouraged for use on all STERIS products.

⚠ Always follow manufacturer instructions for concentrations and use of cleaning products.

⚠ DO NOT SPRAY any cleaning product directly onto the lighthead, Integrated Wall Control (IWC) or any system components. Clean IWC screen with a clean, lint-free cloth dampened with 90% isopropyl alcohol. For other system components, dampen a clean, soft cloth with the cleaning solution and wring out the excess moisture.

⚠ Do not scratch the lens when cleaning; always wear rubber gloves and use only a clean, white, lint-free cloth when wiping external surfaces.

⚠ Prevent leakage of fluids into interior of lighthead or Integrated Wall Control (IWC). Ensure no excess fluids remain on lighthead or IWC during and after cleaning.

⚠ Avoid discoloration of bezel label. Do not clean Integrated Wall Control (IWC) with povidone-iodine solutions or allow such solutions to contact bezel label surfaces.

⚠ Appropriate components of this lighting system have been tested and found in compliance with IEC 60601-1-2, Medical Electrical Equipment – Part 1: General Requirements for Safety; Electromagnetic Compatibility (EMC). There is, however, a potential for electromagnetic or other interference between this equipment and other devices. Should you experience interference, relocate this device or minimize the use of the affected equipment while this device is in operation.

⚠ Do not bump lightheads into walls or other equipment. Always use handles or gripping surface when positioning lighthead during surgical procedures, or when cleaning or servicing the lighting system.

⚠ Portable and mobile RF communications equipment may temporarily affect the operation of the surgical lighting system equipment.

⚠ Use of accessories, transducers, and cables other than those specified, with the exception of transducers and cables sold by the manufacturer of this device as replacement parts for internal components, may result in increased EMISSIONS or decreased IMMUNITY of the surgical lighting system.

⚠ Accessories or replacement parts not listed in the Operator Manual or Maintenance Manual should not be used as they may affect EMC or result in equipment damage.

⚠ Medical Electrical Equipment needs special precautions regarding EMC and needs to be installed and put into service according to the EMC information provided in this manual.

⚠ To ensure balancing, load added to single monitor yoke must not exceed 35 lb (16 kg).

⚠ To avoid inadequate balancing, load added to dual monitor yoke must not exceed 26 lb (12 kg) per monitor.

⚠ Portable RF communications equipment, including peripherals such as antenna cables and external antennas, should be used no closer than 12" (305 mm) to any part of the lighting system, including cables specified by STERIS. Degradation of equipment performance could result.

Product Performance

4.1 Lighthead Optical Performance

IMPORTANT: *Values are typical for the small pattern size at highest intensity setting (unless otherwise noted) at 100 cm (39-3/8') from the lighthead. Definitions and measurements are in accordance with IEC60601-2-41.*

Table 4-1. Lighthead Optical Performance

Features		Typical Performance			
		A-Series		A-Series Adjustable Color Temperature (ACT)	
		Small Pattern	Large Pattern	Small Pattern	Large Pattern
Maximum Central Illuminance	AI* OFF	160 klx	45 klx	160 klx	45 klx
	AI* ON		90 klx		75 klx
Peak Total Irradiance	AI* OFF	580 W/m ^{2}	165 W/m ^{2}	635 W/m ^{2}	180 W/m ^{2}
	AI* ON		330 W/m ^{2}		295 W/m ^{2}
Depth of Illumination (to 60%)		> 67 cm	> 80 cm	> 72 cm	> 80 cm
Pattern Size (d10)		16 cm	30 cm	16 cm	30 cm
d50 (percentage of d10)		58%	65%	55%	60%
Shadow Control					
Single Mask		49%	56%	52%	52%
Double Mask		51%	51%	58%	56%
Cavity		100%	93%	99%	95%
Single Mask w/Cavity		46%	47%	47%	46%
Double Mask w/Cavity		51%	47%	57%	53%
Color Temperature		4400K		3500K, 3900K, 4400K, 5100K	
General Color Rendering Index (CRI)		Up to 97		Up to 96	
Deep Saturated Red Color Rendering Index (R9)		Up to 98		Up to 97	

Table 4-1. Lighthead Optical Performance (continued)

Features	Typical Performance			
	A-Series		A-Series Adjustable Color Temperature (ACT)	
	Small Pattern	Large Pattern	Small Pattern	Large Pattern
Dust and Fluid Ingress Protection	IP42			
LED Life	60,000 hours			

* AI refers to the auto-intensity feature which can be turned OFF or ON.

4.2 Essential Performance

Essential Performance for surgical luminaires include:

1. Providing central illuminance of at least 40 klx
2. Limiting central irradiance to less than 1000 W/m ^{2}

During normal operation, there is no need to periodically confirm that essential performance is present. However, if there is an unexpected event, such as a severe impact or exposure to environmental conditions outside of the recommended range, it can be determined that essential performance has been maintained by a visual observation that:

1. Light output appears the same as before the event.
2. There is not any apparent damage to the system.

NOTE: In extreme cases of electromagnetic interference, the operator may experience temporary loss of light function or camera operation. This can be corrected by removing the source of interference and power cycling the light if necessary.

4.3 Environmental Conditions

Normal Operating Temperature Full System	17 to 25°C (63 to 77°F), ambient
Recommended Transport/Storage Temperature (not exceeding 15 weeks)	2 to 38°C (36 to 100°F)
Recommended Relative Humidity	10% to 85%
Recommended Atmospheric Pressure	500 to 1060 hPascals

4.4 Power Requirements

Four Lighthead System	120 - 240 Vac, 50/60 Hz 7 - 3A 700 Watts
Typical Single Lighthead Wattage (for both ac and dc backup operation)	A-Series: 40 Watts, nominal; 140 Watts, max (AI ON) A-Series ACT: 50 Watts, nominal; 130 Watts, max (AI ON)
Optional LED Ambient Light Kit	24 Vdc, 15W

Post Installation Verification

5.1 Introduction - Post Installation Verification

WARNING

ELECTRIC SHOCK HAZARD

⚠ Do not remove covers or perform service other than as described in the Maintenance section of this operator manual. Refer servicing to qualified service personnel. (*Maintenance Manual, P764338-491.*)

WARNING

IMPACT HAZARD

⚠ Do not remove locking pin from the spring arm until the lighthead has been securely installed onto the spring arm. *Note: This warning applies at both installation and removal procedures.*

Equipment Drawings showing all of the space and utility requirements are sent to the purchaser after the order for this surgical light is received. The clearance space shown on the drawing is necessary for proper installation, operation and maintenance of this fixture.

Installation Instructions are furnished with the lighting system.

If any of these documents are missing or misplaced, contact STERIS, giving the serial and model numbers of the equipment. Replacement copies will be sent to you promptly.

5.2 Introduction – Pre-operation Checklist

Before operating the equipment, complete the pre-operation checklist provided in this section. It is essential to the safe operation and continuing maintenance of this equipment to verify the installation is complete and correct. (Refer to *Figure 5-1*, and *Figure 5-2* to locate parts.).

5.3 Check Suspension Movement

Visually inspect suspension, especially joints, for compromised integrity, such as loose fasteners, covers, or components. Refer to *Figure 5-1* for typical points on the suspension.

Verify that suspension system moves through all articulations smoothly without binding. Lightheads and monitors should move smoothly and easily. When positioned, the lighthead and monitor support arms should not drift. If binding or drifting is present in suspension movements, call your STERIS service representative to make adjustments. See *Figure 5-1*.

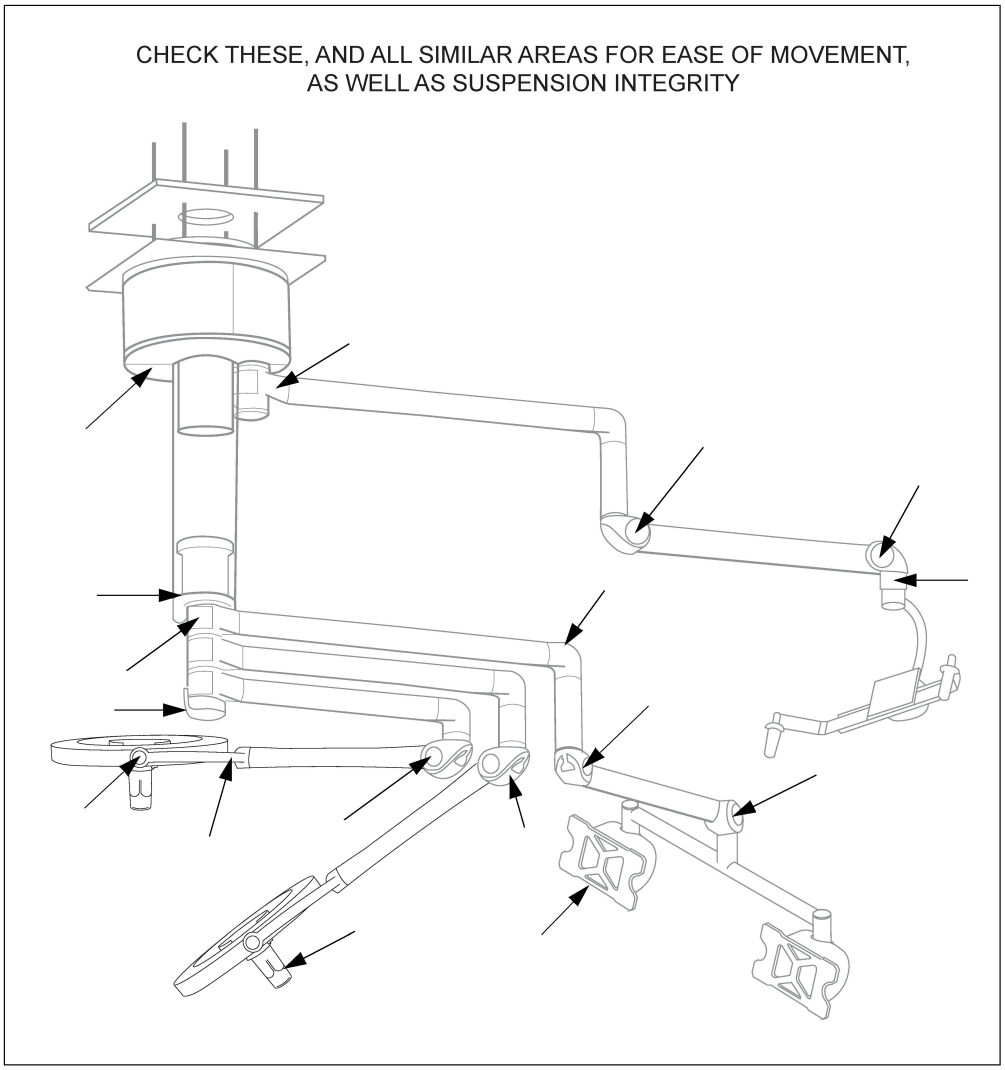

Figure 5-1. Check Suspension

WARNING

PINCHING HAZARD

⚠ Pinch points are created during extreme articulation of the suspension system. Do not place hands on or near the suspension knuckle during lighthead articulations.

5.4 Monitor Arms

Refer to *Figure 5-2*. Monitor support arms are capable of the following articulations: (1) rotate 240° at auxiliary spindle; (2) rotate 320° at central spindle; (3) rotate 310° at the horizontal extension arm; (4) rotate 320° at the spring arm/yoke spindle; (5) move up or down by pivoting at spring arm knuckle up to 40° (20°, 30° stop locations) up, and 40° down. Monitor yoke also allows (6) tilt15° backward (up) and 90° forward (down).

- For information about the monitor, refer to separate operating instructions supplied with monitor(s).
- Power supply and input signals to monitors may be routed through the suspension from an external video source (external video sources not provided by STERIS).

- Range of upward motion for spring arm can be limited to +20°, +30°, and +40° for accessory spring arms; +0°, +15°, and +30° for lighthead spring arms.

  NOTE: If weight or range of motion for monitor mount system is changed, refer to Installation Instructions (11007640) or Maintenance Manual (P764338-491) for procedures to help ensure proper balancing and motion.

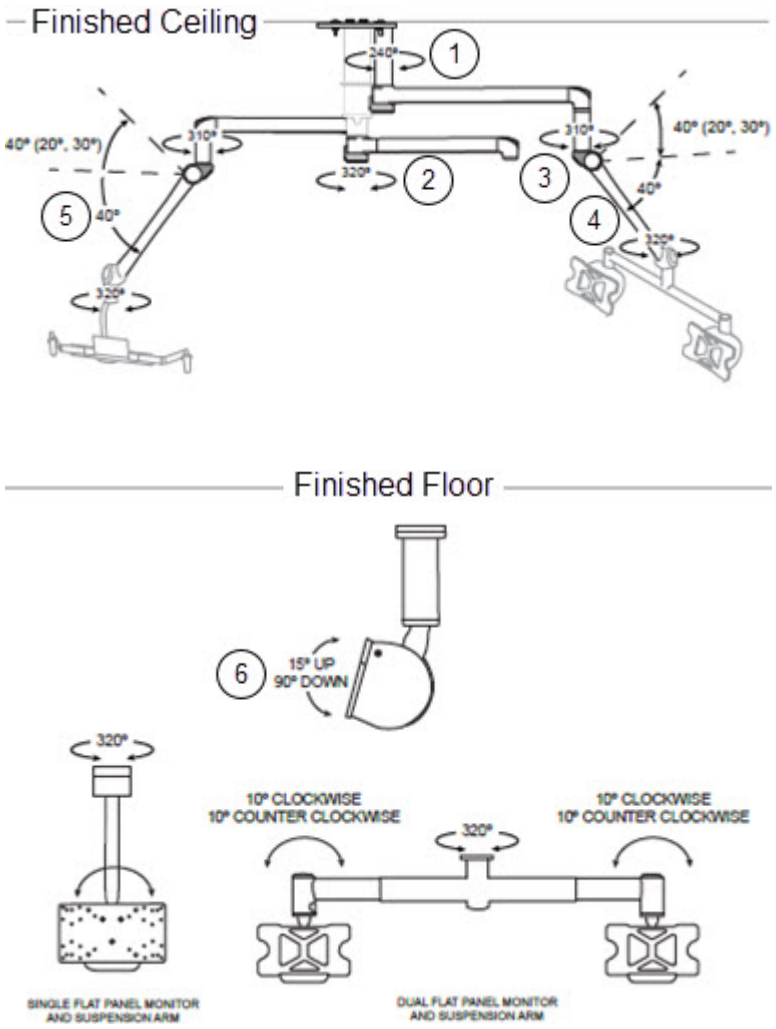

Figure 5-2. Monitor Arms Positioning

5.5 Check System Operation

Verify electrical power is applied to the Integrated Wall Control (IWC).

1. **Integrated Wall Control (IWC):** Turn IWC on by toggling power switch to "on" (I) position. Allow 30 seconds for start up. Verify Light Control Screen is displayed after power is applied and self-diagnostics and startup is completed. See *Figure 5-3*.



Figure 5-3. Integrated Wall Control (IWC)

NOTE: Color Temperature control appears only on systems optioned with A-Series ACT lightheads.

2. **Check Fault Indicators:** If any fault graphic on IWC display is visible (see *Figure 5-4*), one or more faults may have occurred. Many services for errors must be referred to a trained, qualified service technician (contact STERIS for assistance with failed LED modules).



Figure 5-4. System Failure Indicator

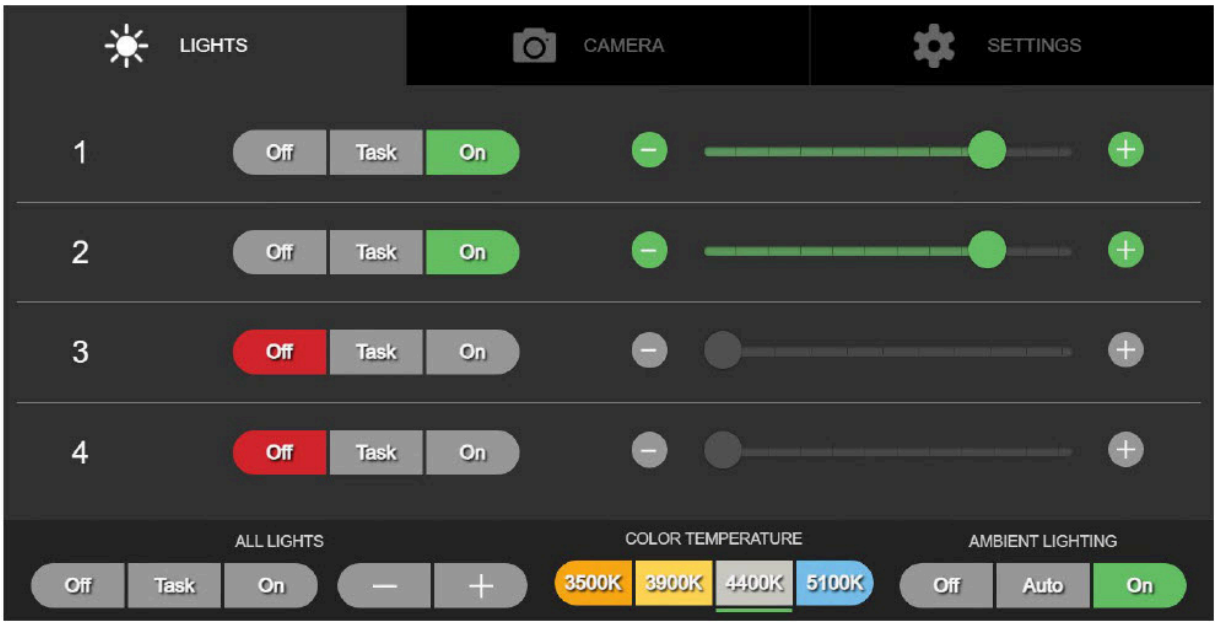

Figure 5-5. Use IWC to Verify System Operation by Toggling Each Light On and Off and Cycling Color Temperature (Where Optioned). Four ACT Lighthead Operation Screen Shown with Ambient Light Installed and Turned ON.

3. Verify all lights are represented on the IWC and that no fault indication icon is displayed on Light Control Screen. If fault indicator appears, press fault icon and record faults listed. Immediately report all faults to a qualified service technician.

   NOTE: Turn power OFF to each lighthead using On/Off controls when testing is complete.

Check Intensity Controls at Each Sterile Control: Verify intensity level can be increased and decreased at each lighthead using each of the surgeon's control buttons (see *Figure 5-6*). If a surgeon control button is not illuminated or is blinking/pulsing, immediately report the issue to a qualified service technician.

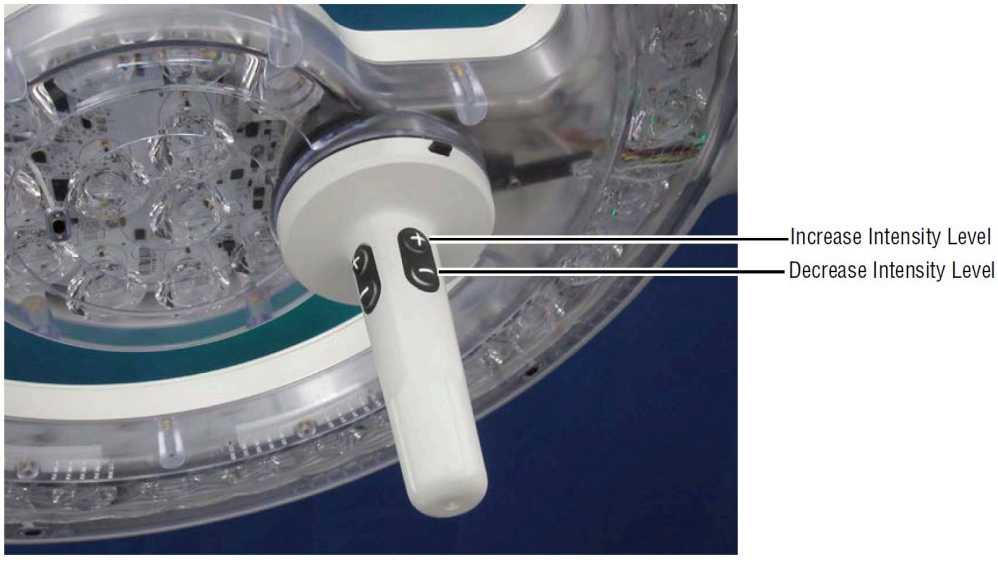

Figure 5-6. Check Lighthead Intensity Operation Using Surgeon's Control Buttons

5.6 Check Optional Video Camera Module Operation

Turn Integrated Wall Control (IWC) ON. Install camera (refer to *Section 6.12, Installing Video Camera Module*). Press Camera menu button (*Figure 5-7*) on IWC navigation pane to enter the camera control menu. Press Camera Power button to turn on the camera.



Figure 5-7. Camera Control (Camera Menu Active with Camera Turned Off)



Figure 5-8. Camera Control (Camera Menu Active with Camera Turned On)

Video: Verify a clear signal is reaching video display device (monitor) from the camera. Turn OFF camera prior to checking or adjusting fiber optic connections.

NOTE: A camera displays on the IWC when connected to any lighthead. Video is only transmitted through the suspension when connected to a video enabled lighthead/arm.

IMPORTANT: *Fibers carry signal from class 3R laser. Electromagnetic radiation from the laser may not be visible. Always turn OFF camera and laser receiver modem prior to making, checking, or adjusting connections.*

Integrated Wall Control (IWC): Verify zoom, rotation, brightness and focus functions with the IWC buttons. See *Figure 5-9*.



Figure 5-9. Camera Control

NOTE: To adjust Zoom, press the associated "+" or "-" button.

NOTE: While "Auto" mode is selected (green border), the associated control buttons are deactivated. The control buttons are activated only when in "Manual" mode.

NOTE: When first turning on the camera, the camera performs an initializing sequence. During the sequence, the camera rotates. It may take up to 15 seconds for the initialization to complete.

NOTE: The camera is capable of rotating 340°. When camera rotation reaches the stop at either end, it no longer rotates in that direction.

Camera Faults: Verify that camera powers on and there are no camera communication faults displayed on IWC Fault Log Screen. The IWC fault log screen can only be accessed when the IWC indicates a fault.



Figure 5-10. In-Light Video Camera

5.7 Check Optional Monitor Arms

The lighting system can include monitor arms. Verify smooth and easy movement (without binding or drifting) through the monitor arm(s) ranges of articulations. Verify monitor(s) receive video signals throughout their range of motion.

NOTE: No monitor arm joint is capable of continuous rotation. If a joint is able to rotate more than 360° in the same direction, contact a qualified service technician. Monitor arms allowed to rotate with no stops are likely to cause damage to internal wires.

Operating Instructions

6.1 Light Control Center — Control Screen

See *Figure 6-1*.



Figure 6-1. Integrated Wall Control (IWC) Light Control Screen

Lighthead ID Number

See *Figure 6-2*.

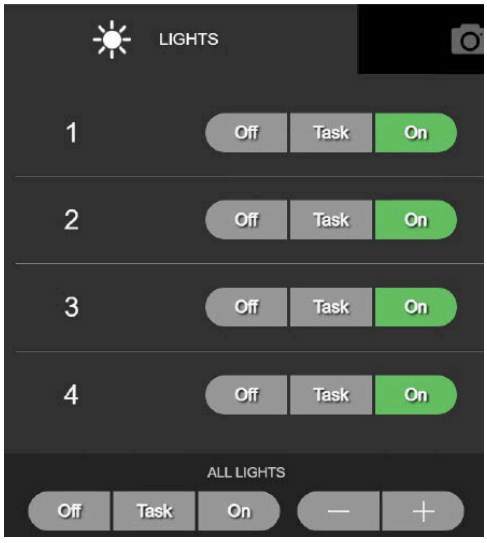

Figure 6-2. Lighthead ID Number

6.2 Intensity Controls

Integrated Wall Control (IWC)

The Integrated Wall Control (IWC) allows the user to adjust the lighthead intensity level (brightness) by pressing a touch screen button. Each lighthead has a numbered cover that corresponds to a numbered control on the IWC. Each lighthead can be controlled by control buttons. Buttons on the lighthead handle can be used by sterile personnel. To use light handle buttons in a sterile manner, the handle must be properly sterilized (refer to *Section 8.2, Sterilization Recommendation*) or properly covered by a disposable cover. Buttons located on an optional camera may only be operated by sterile personnel when covered with a disposable sterile cover. Buttons located on the lighthead yoke are not designed for sterile use and may be controlled by non-sterile personnel.

WARNING

EXPLOSION HAZARD

⚠ Do not use lighting fixture in the presence of flammable anesthetics.

To Adjust Lighthead Intensity Levels:

1. Lightheads may be turned on and off individually or all lights connected to a system simultaneously (up to four lightheads). See *Figure 6-3* and *Figure 6-4* for examples of lights in On and Off positions.



Figure 6-3. On/Off Toggle Button (Off Position Displayed)

After pressing On/Off toggle button, lighthead icon lights up and shows on display. See *Figure 6-4*.



Figure 6-4. On/Off Toggle Button (On Position Displayed)

2. Each lighthead may be adjusted from intensity 0 (Off) to intensity 10 (brightest) by using the slider. There is a slider for adjusting each lighthead individually. See *Figure 6-5*.
3. To the left and right of each slider is a (-) and (+) button, respectively. These buttons may be used to step through intensities on the slider in order. See *Figure 6-5*.

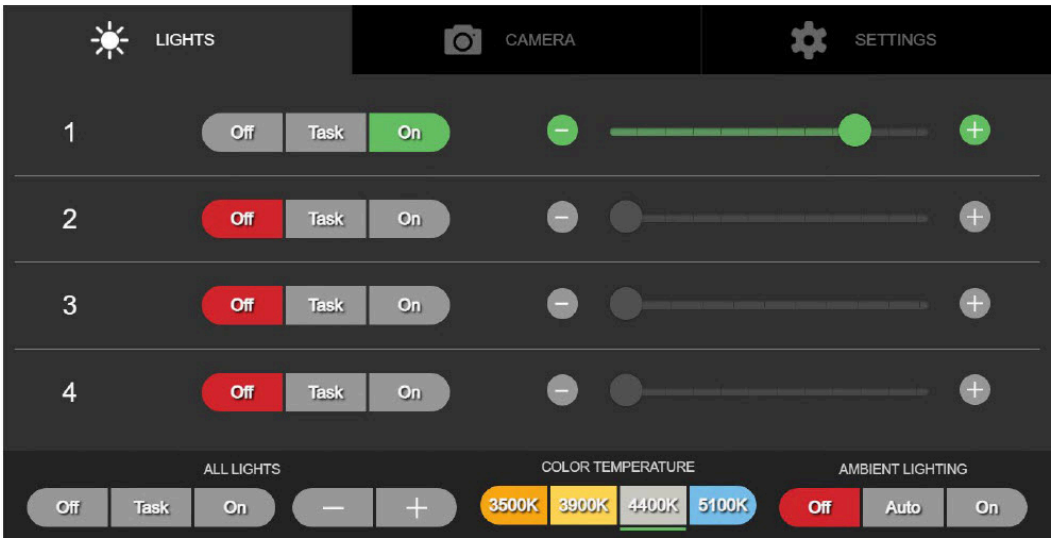

Figure 6-5. Increase or Decrease Light Intensity Using Slider

4. All lightheads connected to a system (up to four) can be simultaneously stepped up or down in intensity by using the (-) and (+) buttons under All Lights heading. See *Figure 6-6*.

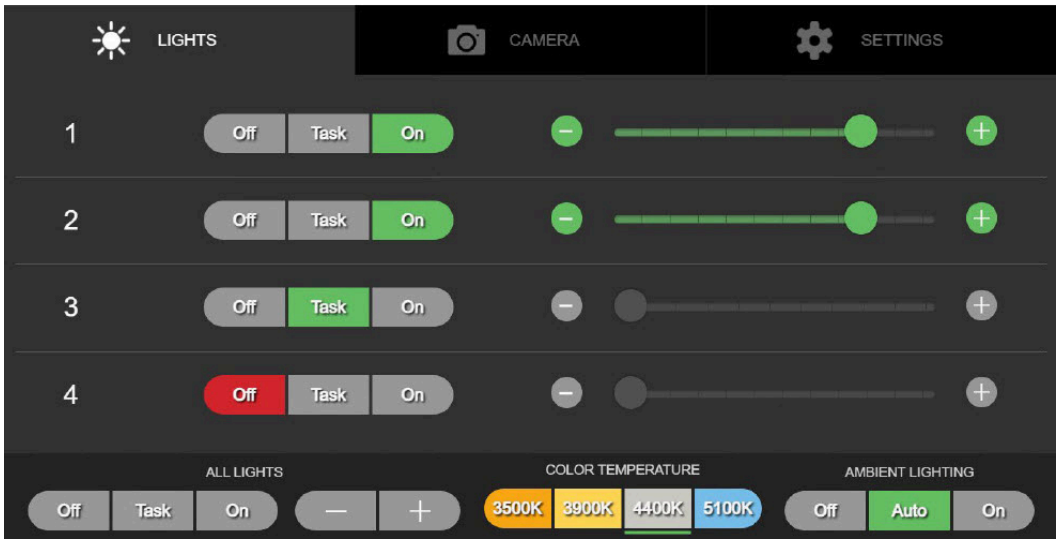

Figure 6-6. Increase or Decrease Light Intensity for All Lightheads Simultaneously

5. Each lighthead may be put into Task mode. This mode offers a very dim light output below the lowest setting on the slider. Task mode is often used for low illumination for support personnel during laproscopic cases. Task mode may also be enabled for all lights connected to a system simultaneously by pressing Task button below All Lights heading.
6. Intensity levels for up to four lightheads can be controlled from one IWC. A lighthead's surgeon's control buttons can also be used to adjust the intensity level for that lighthead.

   NOTE:

   For longer LED module life, and decreased energy delivered to the surgeon/patient, use lowest intensity level suitable for surgical procedure.

6.3 Color Temperature Controls

The apparent color of white light can be specified using a metric known as color temperature. Color temperature is typically measured in units of Kelvin (K). White light sources with lower color temperatures are referred to as “warm white” and have a yellower appearance. White light sources with higher color temperatures are referred to as "cool white" and have a bluer appearance. On systems optioned with A-Series ACT lightheads, the IWC allows the user to change the lighthead color temperature by pressing the touch screen buttons that appear between the All Lights and Ambient Lighting controls. These buttons allow the color temperature of all connected lightheads to be simultaneously adjusted to 3500K, 3900K, 4400K, or 5100K.

To Adjust Lighthead Color Temperature

Press the button with the desired color temperature. See *Figure 6-7*, *Figure 6-8*, *Figure 6-9*, and *Figure 6-10* for examples of each color temperature selected.

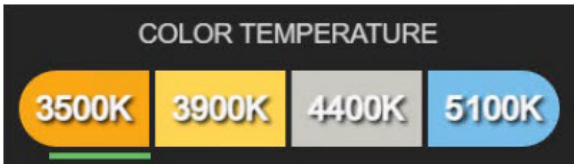

Figure 6-7. Color Temperature Control with 3500K Selected

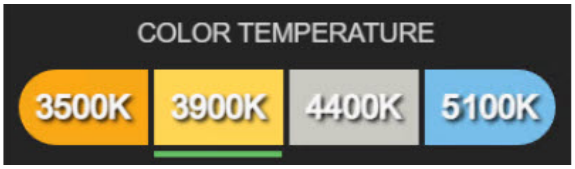

Figure 6-8. Color Temperature Control with 3900K Selected

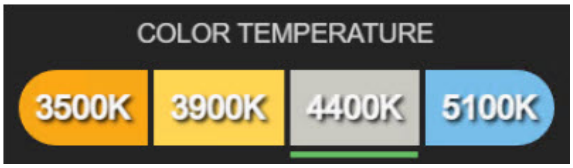

Figure 6-9. Color Temperature Control with 4400K Selected

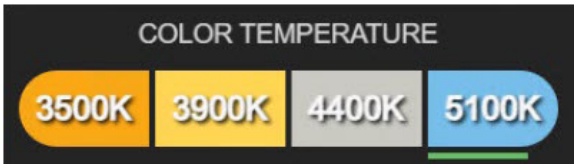

Figure 6-10. Color Temperature Control with 5100K Selected

6.4 Controlling Lights at Lighthead

Introduction

A-Series lights are equipped with controls on each lighthead. Controls are listed below.

The Enhanced Handle core comes standard with A-Series lightheads. The Enhanced handle/core may be replaced with optional Camera or Basic (universal) Handle.

- **Enhanced Handle/Core (standard):** The Enhanced handle/core consists of a body and a core. This may also be referred to as the Standard Handle. The body has four pairs of (+) and (-) rubber buttons. The body may be sterilizable or non-sterilizable. If the handle body is sterilizable, it is indicated on the top surface of the handle. The buttons on the handle body are illuminated by the handle core. The Enhanced handle may be used to control lighthead intensity and light spot size. The buttons are accessible by sterile personnel when the handle is used with a disposable sterile cover.

  The sterilizable handle may be steam sterilized. When sterilized and installed with proper sterile technique, the handle and buttons may be used directly by sterile personnel.
- **Camera (optional):** The camera has four pairs of illuminated (+) and (-) buttons similar to the Enhanced handle. When installed, the camera can control lighthead intensity and spot size.
- **Yoke:** The yoke has a pair of illuminated (+) and (-) buttons. The form and function matches the buttons on the light handle. Yoke buttons may only be used by non-sterile personnel.

  NOTE: Buttons are only sterile when the sterilizable handle has been properly sterilized or if the handle has been covered with a STERIS disposable sterile cover.
- **Basic Handle (optional):** This may also be referred to as the Universal Handle. The basic handle does NOT have control buttons. Using the basic handle removes the ability for sterile personnel to control lighthead intensity. The basic handle only controls light spot size. Refer to documentation included with the basic handle for additional information and installation instructions.

Turning Light On

1. Grasp handle of appropriate lighthead. Each handle has four pairs of membrane buttons located toward the top of the handle. See *Figure 6-11*.

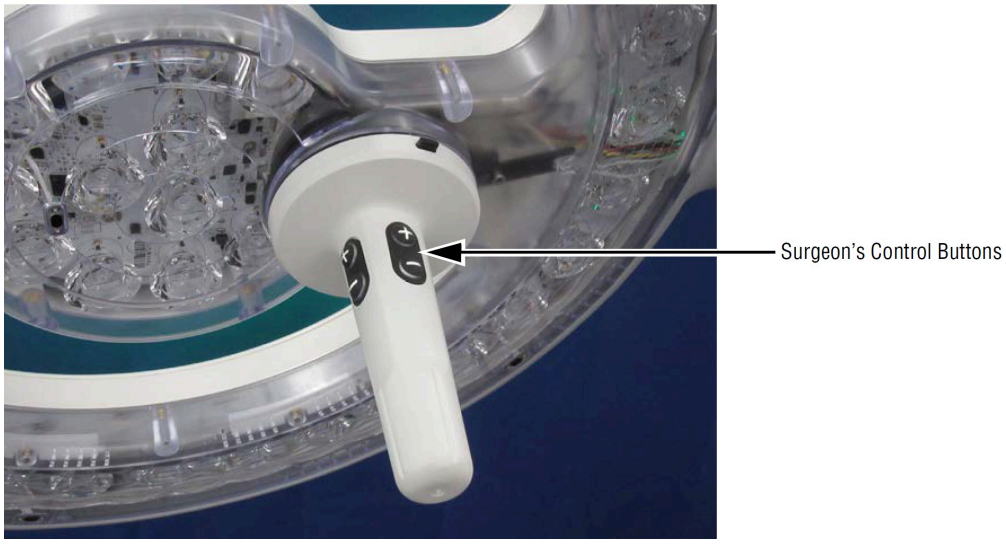

Figure 6-11. Lighthead Surgeon's Control Buttons

2. Press any (+) or (-) button to turn surgical light on to intensity setting 7.
3. Press and hold (+) button for greater than one second to turn all surgical lights connected to the system to intensity setting 7.

Adjusting Light Intensity

1. Press (+) button to increase lighthead intensity.
2. Press (-) button to decrease lighthead intensity.

Lights have 10 intensities and task lighting.

Task Lighting

Press (-) button while lighthead is set to intensity 1 to turn task light on.

Task light is a low intensity setting often used by support personnel during laporoscopic procedures when room lighting is low.

Turning Light Off

Press (-) button for greater than one second to turn light off. Continue pressing (-) button for a total of 1.5 seconds to turn off all surgical lights connected to the system.

6.5 Lighthead Features

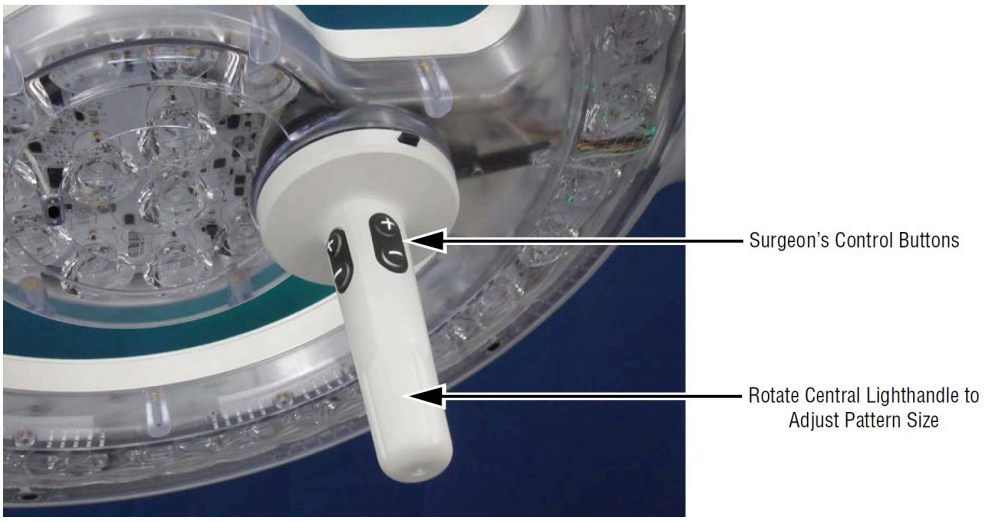

Figure 6-12. A-Series Lighthead

Table 6-1. Summary of Lighthead Control Features

Feature	Basic/Universal Handle	Enhanced/Standard Handle	Camera
Included with All Systems	Optional	Yes	Optional
Steam Sterilizable	No	Yes (Sterilizable Version Only)	No
Spot Size Adjustment	Yes	Yes	Yes

Table 6-1. Summary of Lighthead Control Features (continued)

Feature	Basic/Universal Handle	Enhanced/Standard Handle	Camera
Light Intensity Control	No	Yes	Yes
Task Lighting Mode	No	Yes	Yes

Table 6-2. Sterile Covers

Description	Part Number
Sterile Light Handle Cover (Enhanced/Standard)	11010168
Sterile Light Handle Covers (Case) (Enhanced/Standard)	11010162 (LB83)
Sterile Universal Handle Cover (Basic)	11010173
Sterile Universal Handle Covers (Case) (Basic)	11010164 (LB82)
Sterile HD Camera Handle Cover	11010169
Sterile HD Camera Handle Covers (Case)	11010163 (LB84)
Sterile 4K Camera Handle Cover	11024790
Sterile 4K Camera Handle Covers (Case)	11024794 (LB85)

6.6 Fault Display

System faults may be indicated in two locations.

1. Back lit (+) and (-) control buttons pulse/flash to indicate a fault condition that results in loss of essential performance.
2. Integrated Wall Control (IWC) screen displays a fault icon in the top right of the screen to indicate a fault condition. See *Figure 6-13*. The fault may indicate communication problems, software incompatibility, disabled non-essential functions because of a fault condition, or loss of essential performance.



Figure 6-13. Integrated Wall Control (IWC) Fault Icon

6.7 Integrated Wall Control (IWC) Fault Log Indications

The Integrated Wall Control (IWC) is capable of displaying fault messages. Fault messages, for the most part, are intended for use by trained STERIS service technicians. An operator not trained in servicing this equipment can provide

fault message information to STERIS when communicating a service issue. A summary of faults that can appear in the fault log is given in *Table 6-3*.

IMPORTANT: *Refer any problems with 'yes' listed under the Service Required column to STERIS. Also, '#' indicates a numeric value on the display.*

Table 6-3. IWC Fault Indications

Fault Message	Description	Service Required
System configuration change detected	When system is powered up, detected configuration is different than configuration that was previously accepted as being correct.	Yes
Invalid Lighthead Configuration. Contact Service	One or more lightheads are plugged into an incorrect connector on hub breakout board(s)	Yes
Invalid Lighthead # assembly	Control boards in a lighthead are not all compatible (# is a lighthead number between 1 and 4).	Yes
System firmware incompatibility, update system firmware	Firmware on a control board does not support detected revision of control board hardware.	Yes
Lighthead/LED firmware mismatch, update system firmware	Firmware in all connected lightheads is not the same. All LED modules and all lighthead control boards must have same firmware.	Yes
UI to MC Communication Failure	UI has lost communication with master control	Yes
System primary DC power output # failure	Power combiner output voltage is below power failure threshold. (# is Power combiner primary output A or B)	Yes
Power supply # failure	Voltage of one of the system power supplies is below power failure threshold (# is a power supply number between 1 and 4).	Yes
System date/time not set	Real-time clock time and date are not set. Time and date are used when logging events and faults.	No
Master Control - Lighthead # communication failure	Master control has lost communication with a lighthead (# is a lighthead number between 1 and 4).	Yes
Lighthead # - LED module # communication failure	A lighthead has lost communication with one or more of LED modules in the lighthead (the first # is a lighthead number between 1 and 4 and the second # is an LED module number between 1 and 6).	Yes
Lighthead # - camera module failure	A lighthead has lost communication with camera module that is installed in the lighthead or camera module cannot communicate with internal camera (# is a lighthead number between 1 and 4).	No
Lighthead # handle button stuck	One of the buttons on handle or camera module is stuck in pressed position (# is a lighthead number between 1 and 4).	No
Lighthead # yoke button stuck	One of the buttons on lighthead yoke is stuck in pressed position (# is a lighthead number between 1 and 4).	No

Table 6-3. IWC Fault Indications (continued)

Fault Message	Description	Service Required
Lighthead # distance sensor # failure	An LED module in a lighthead has lost communication with its distance sensor (first # is a lighthead number between 1 and 4, second # is an LED module number between 1 and 6).	Yes
System firmware not current, update system firmware	Deployment file on master control has different versions of firmware than firmware loaded on control boards.	Yes
LED module firmware download failure on Lighthead #	An attempt to update firmware on LED module on a lighthead has failed (# is a lighthead number between 1 and 4).	Yes
Camera module firmware download failure on Lighthead #	An attempt to update firmware on camera module on a lighthead has failed (# is a lighthead number between 1 and 4).	Yes
Lighthead # firmware download failure	An attempt to update the firmware on a lighthead has failed (# is a lighthead number between 1 and 4).	Yes
Master Controller firmware download failure	An attempt to update firmware on a master controller has failed	Yes
User Interface file update failure	Updating user interface files on master control has failed.	Yes
Invalid calibration on Lighthead #	Calibration information on a lighthead is not valid (# is a lighthead number between 1 and 4).	Yes
Hardware mismatch, system contains fixed and adjustable color lightheads	System has detected both A-Series and A-Series ACT Lightheads connected to the same IWC.	Yes

6.8 Lighthead Positioning

Lightheads can be positioned by using either the handle, or by grasping the non-sterile bumper around the lighthead housing. Each lighthead can be positioned as listed from outside or from within the sterile field. To optimize shadow control, position the lighthead as appropriate before starting the intended surgical procedure.

CAUTION

POSSIBLE EQUIPMENT DAMAGE

⚠ Do not bump lightheads into walls or other equipment.

HarmonyAIR™ A-Series Surgical Lighting System Lighthead/Spring Arm Assemblies may:

See *Figure 6-14*.

1. Rotate continuously around central hub;
2. Rotate continuously at horizontal suspension arm/spring arm connection;
3. Rotate continuously at spring arm/yoke connection;
4. Rotate in yoke approximately 310°; and
5. Move up or down by pivoting at suspension elbow up to 30° up (or 0° or 15° with adjustable stop) and 85° down (total range: 100°).

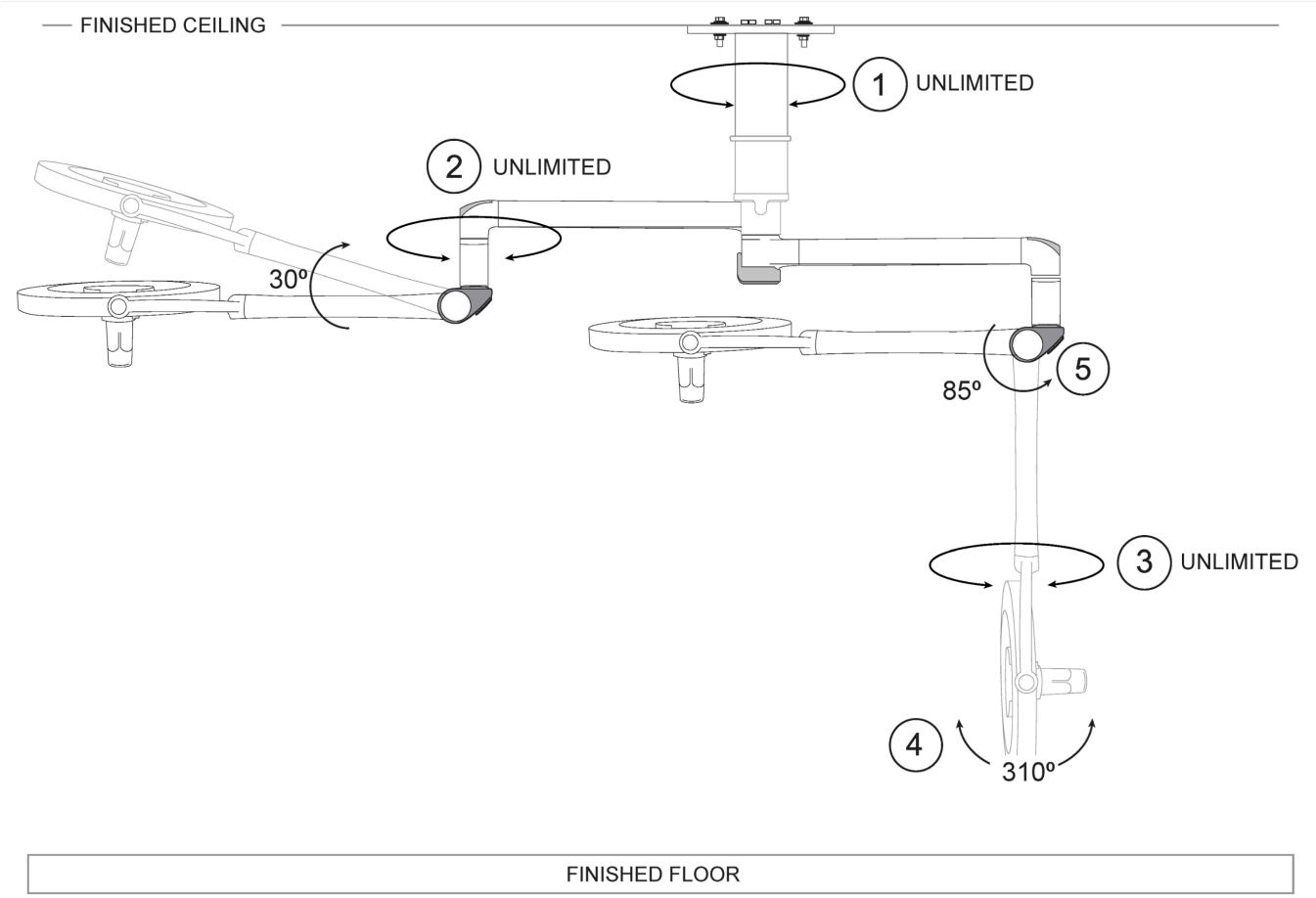

Figure 6-14. Lighthead Positioning

6.9 Lighthead Pattern Adjustment

The illumination pattern for lightheads can be adjusted to any size between the maximum diameter and minimum diameter.

- Rotate central light handle clockwise to decrease pattern size.
- Rotate central light handle counterclockwise to increase pattern size.

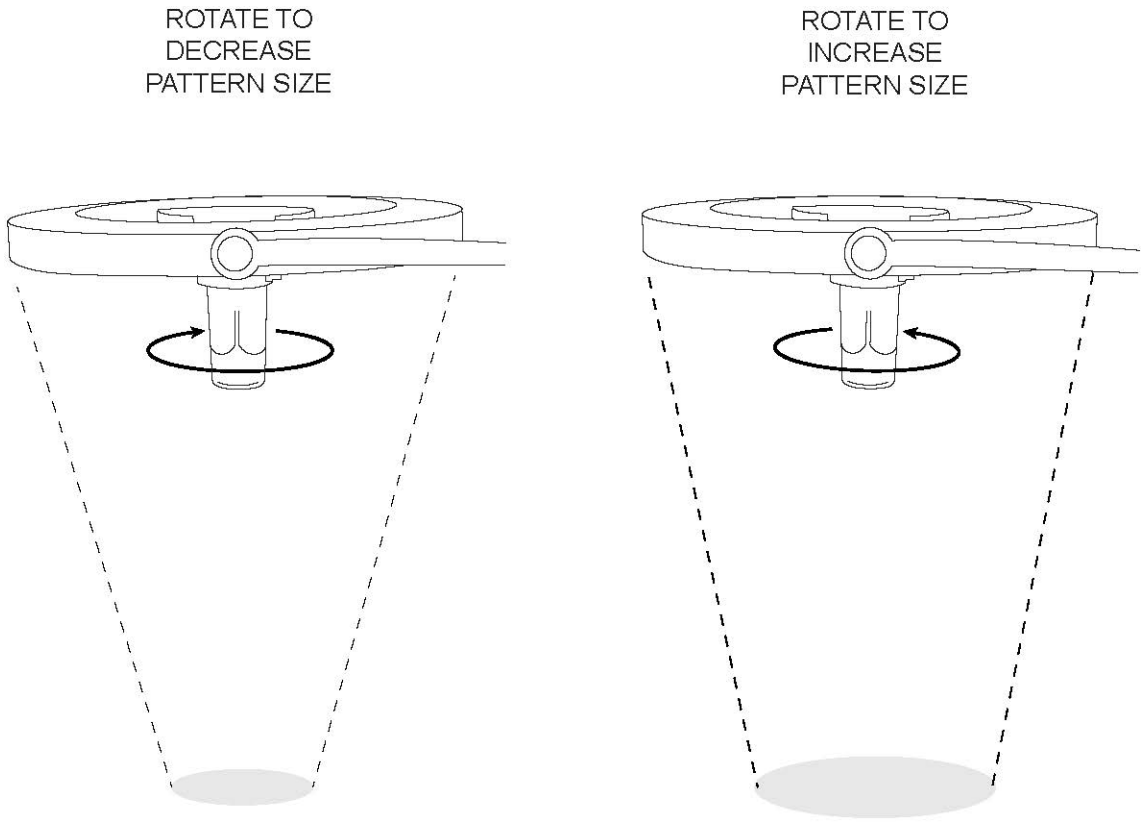

Figure 6-15. Light Pattern Size Adjustment

6.10 Light Handle

Introduction

Light handles are used to position the lightheads, allow access to intensity control on each lighthead, and to adjust lighthead pattern size.

If the light handle is not installed, refer to *Installing Light Handle*.

The plastic light handle can be removed for cleaning. Do not use the lighthead during a sterile procedure unless a disposable cover is installed on the light handle.

1. Prior to starting a procedure, ensure light handle is in place.
2. Remove sterile light handle cover from its packaging and install onto light handle.

   NOTE: Sterile light handle covers, STERIS catalog #LB53, have been sterilized by the use of ethylene oxide per ANSI/AAMI/ISO 11135:2014.

Installing Light Handle

1. Install light handle by aligning connection bolts with holes on top of light handle.

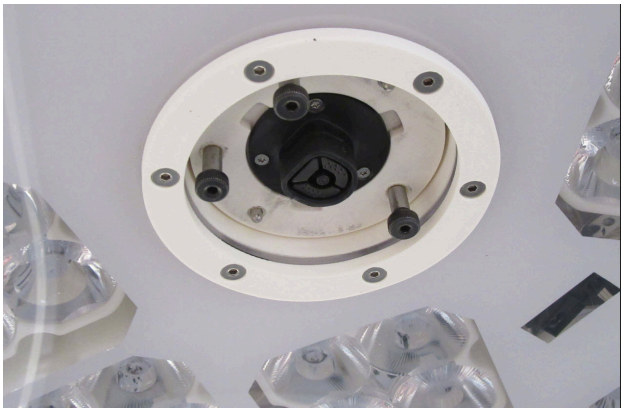

Figure 6-16. Lighthead Connection Bolts

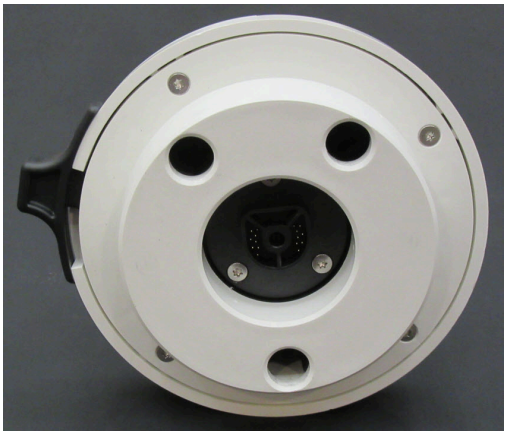

Figure 6-17. Holes on Top of Light Handle



Figure 6-18. Install Light Handle

2. Once light handle is aligned and seated on lighthead accessory port, rotate the switch at the top of light handle in the locked direction.

NOTE: The light handle only attaches to the lighthead in one orientation.

NOTE: The light handle should be rocked and rotated to ensure it is properly connected.

Uninstalling Light Handle

1. Remove light handle by rotating lock slide at top of light handle.



Legend	
1	Light Handle Lock Slide

Figure 6-19. Light Handle Locking Switch

Sterilizable Cover Surgeon Control Handle

Prior to starting a procedure, install a clean, sterilized handle cover by pushing it onto the handle until positive engagement is felt. Ensure handle cover is fully engaged prior to use.

Figure 6-20. Sterilizable Cover Surgeon Control Handle



Cleaning Recommendations

1. Remove visible debris by means of manual or automated cleaning using an enzymatic or neutral PH cleaner/detergent and water. Any cleaner used must be compatible with aluminum and silicone.
   - Remove silicone cover from Surgeon Control Handle before cleaning.
   - Follow instructions supplied with the cleaning agent regarding temperature and dilution rates.
   - Use a brush or cloth if needed.
2. Rinse thoroughly.

Sterilization Recommendation

1. Silicone sterilizable cover be sterilized before use in any surgical procedure.
2. When placing cover in the sterilizer for processing, the best practice is to orient all objects with openings downward, as if to allow water (or air) to flow out.
3. Sterilize handle cover using a cycle with either of the following parameters:
   - Prevacuum
     - **Temperature:** 270°F (132°C)
     - **Exposure Time:** 4 minutes
   - Gravity
     - **Temperature:** 270°F (132°C)
     - **Exposure Time:** 10 minutes

     NOTE: Before using silicone cover, note the following:

     a. Reuse limit is 500 cycles.

     b. Replace ring if yellowing, deformation, cracking or other signs of deterioration are present.

Installing Disposable Light Handle Cover

NOTE: Wrinkles in the cover are normal. The appearance of wrinkles in the cover does not compromise the integrity of the cover.

1. Place sterile cover on light handle. See *Figure 6-21*.



Figure 6-21. Place Sterile Cover On Light Handle

2. Push sterile cover completely onto light handle. See *Figure 6-22*.



Figure 6-22. Installed Disposable Sterile Light Handle Cover

6.11 Light Handle with Enhanced Handle Core

Introduction

Light handles are used to position the lightheads, allow access to intensity control on each lighthead and to adjust lighthead pattern size.

Install Enhanced Handle Core

Install Handle Body

Remove Handle Body

Remove Handle Core

Recommended Cleaning Procedure

Sterilizable Light Handle

Sterilization Recommendation

Install Disposable Sterile Light Handle Cover

Install Enhanced Handle Core

NOTE: It may be easier to install the handle core when the lighthead is aimed at the ceiling.

1. Align three holes in red handle core with silver bolts in handle port on lighthead. See *Figure 6-23*.



Figure 6-23. Align Handle Core with Lighthead

2. Push in two locations marked "Push Here" on the handle core and rotate handle core clockwise to lock handle core.

   NOTE: The rotation required to install the handle is in addition to rotation required to adjust the pattern size.

3. The ring snaps into place and displays an indication handle core is locked in place. See *Figure 6-24*.

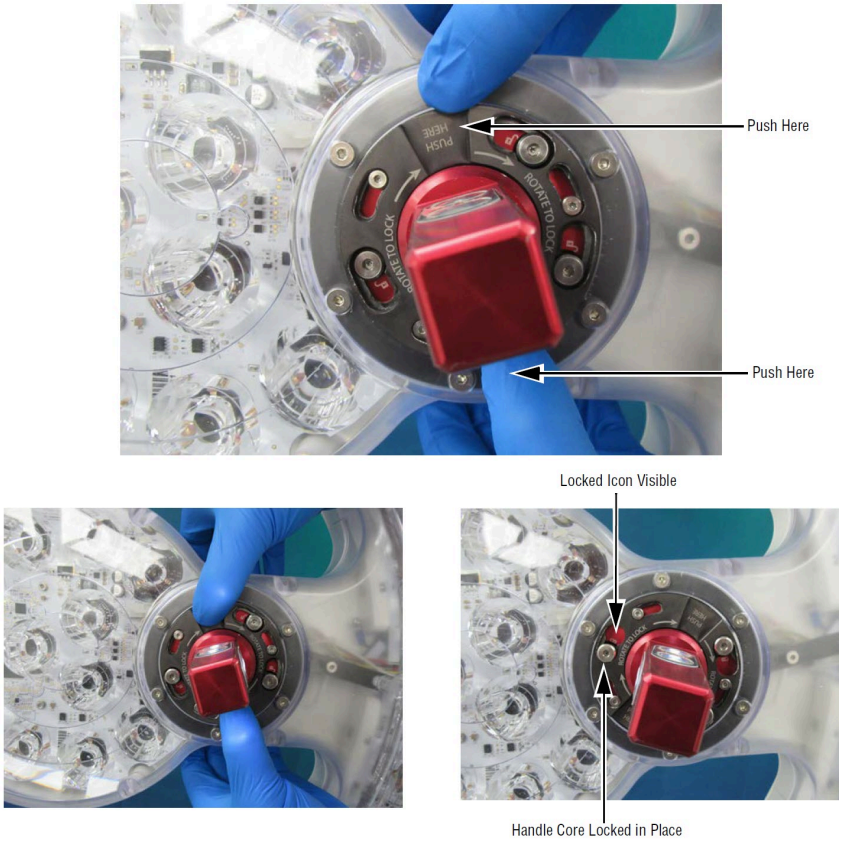

Figure 6-24. Handle Core Locked in Place

4. Verify proper installation by pulling/rocking handle core to confirm handle core is properly seated and locked.

Install Handle Body

NOTE: Sterilizable handle body may be sterilized and properly stored. In this case, the body is installed just prior to use.

CAUTION

POSSIBLE EQUIPMENT DAMAGE

⚠ Do not use lighthead without handle body installed.

1. Install handle body. See *Figure 6-25*.



Figure 6-25. Install Handle Body

2. Push handle toward lighthead. A "clicking" sound is heard when handle is properly locked into place.

3. Verify handle is locked in place. See *Figure 6-26*.



Figure 6-26. Handle Body Properly Locked into Place

Remove Handle Body

1. Press button located at top of handle body. See *Figure 6-27*.



Figure 6-27. Press Top Button on Handle Body to Remove Handle

2. Remove handle body from red handle core. See *Figure 6-28*.



Figure 6-28. Remove Handle Body from Red Handle Core

Remove Handle Core

1. Rotate lighthead so lens is aimed toward the ceiling.
2. Push in two locations marked "Push Here" on the handle core and rotate handle core counterclockwise to unlock handle core. See *Figure 6-29*.

   NOTE: The rotation required to uninstall the handle is in addition to rotation required to adjust the pattern size.

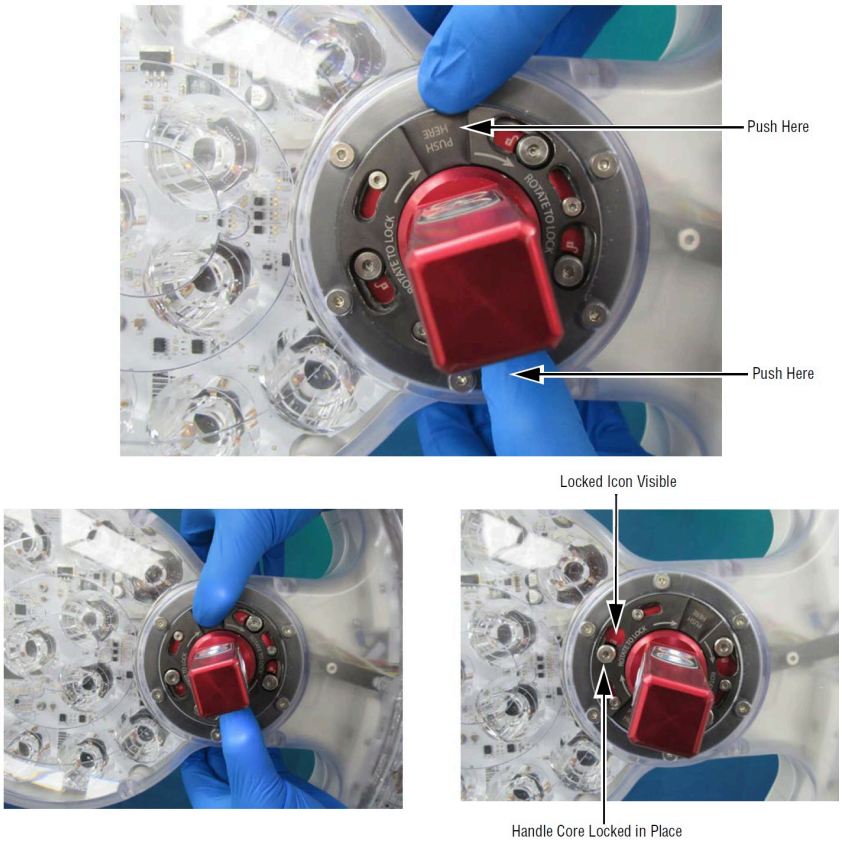

Figure 6-29. Remove Handle Core

3. Remove handle core from lighthead.

Recommended Cleaning Procedure

1. Remove visible debris by means of manual or automated cleaning using an enzymatic or neutral pH cleaner/detergent and water. Any cleaner used must be compatible with aluminum and silicone.
   - Follow instructions supplied with the cleaning agent regarding temperature and dilution rates.
   - Use a brush or cloth if needed.
2. Rinse thoroughly.
3. Refer to *Section 8.4, Manual Cleaning Using Enzymatic Solutions for Sterile and Non-Sterile Handle Body* and *Section 8.5, Automated Cleaning Using Enzymatic Solution for Sterile and Non-Sterile Handle Body*.

Sterilizable Light Handle

WARNING

POSSIBLE PATIENT INJURY HAZARD

⚠ Failure to engage the light handle body or disposable cover completely may result in body or disposable cover falling from lighthead during procedure.

WARNING

BIOHAZARD

⚠ Sterile disposable covers are intended for single use only.

WARNING

STERILITY ASSURANCE HAZARD

⚠ Do not use disposable handle covers if its packaging has been damaged, torn or opened; as the sterility of the cover may be compromised.

The sterilizable light handle body can be removed for cleaning and sterilization. See *Remove Handle Body*.

Sterile personnel shall not interact with the lighthead during a sterile procedure unless:

1. Handle is properly sterilized and securely connected, or
2. Handle is securely connected and covered with a disposable handle cover. See *Install Disposable Sterile Light Handle Cover*.

Sterilization Recommendation

NOTE: Only the Sterilizable handle should be sterilized. The Non-Sterilizable handle may not be autoclaved.

1. Handle body must be sterilized before use in any surgical procedure. Always inspect handle for cracks or damage prior to sterilization.
2. When placing handle body in sterilizer for processing, best practice is to orient all objects with openings downward, as to allow water (or air) to flow out.
3. Recommended sterilization parameters for sterilizable handle body:
   - Maximum Recommended Sterilization Cycles: 500
   - Prevacuum (4-Pulse) Conditioning
     - **Temperature:** 270°F (132°C)
     - **Exposure Time:** 4 minutes
     - **Dry Time:** 30 minutes
   - Gravity Conditioning
     - **Temperature:** 270°F (132°C)
     - **Exposure Time:** 10 minutes
     - **Dry Time:** 30 minutes

Install Disposable Sterile Light Handle Cover

NOTE: Wrinkles in the cover are normal. The appearance of wrinkles in the cover does not compromise the integrity of the cover.

1. Place sterile cover on light handle. See *Figure 6-30*.



Figure 6-30. Place Sterile Cover On Light Handle

2. Push sterile cover completely onto light handle. See *Figure 6-31*.

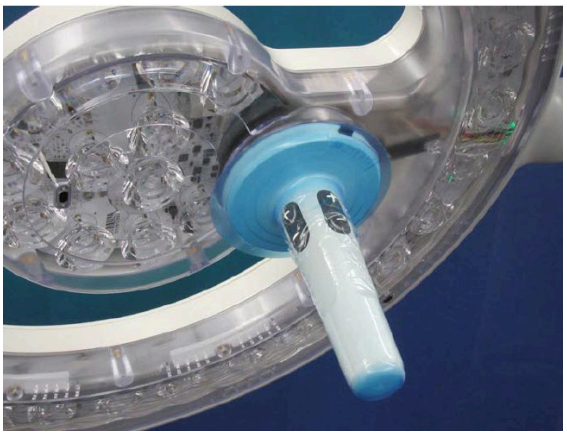

Figure 6-31. Installed Disposable Sterile Light Handle Cover

NOTE: Sterile light handle covers, STERIS catalog #LB53, have been sterilized by the use of ethylene oxide per ANSI/AAMI/ISO 11135- 1.

6.12 Installing Video Camera Module

NOTE:

The A-Series Camera Module alignment posts and connector are keyed to only allow installation on an A-Series lighthead.

NOTE:

The camera physically connects to any A-Series lighthead, but only functions on video ready suspension arms.

1. Rotate lighthead until lighthead lens faces the room ceiling.
2. Remove Enhanced handle by pressing the button at the top of the handle body. Once body is removed, handle core may be removed by pushing and twisting retaining fixture. See *Section 6.11, Light Handle with Enhanced Handle Core* or *Section 6.10, Light Handle* depending on the equipped handle.
3. Camera transmits signals over a fiber optic cable. Camera shall be handled with care to avoid dust, dirt, debris, and fingerprints from impacting the fiber signal. The signal is transmitted from center pin on the camera connector. Fiber connections may be cleaned following common fiber cleaning practices.

   WARNING

   PERSONAL INJURY HAZARD

   ⚠ Avoid eye damage. Fibers transmit 3R Lasers and should be serviced with care.

4. Once Enhanced core (or basic) handle is removed, camera may be installed. The camera is installed by aligning connection bolts with holes on top of camera. See *Figure 6-32*.
5. Once camera is aligned and seated on lighthead accessory port, rotate the switch at the top of camera housing in the locked direction. See *Figure 6-33*.

   Figure 6-33 shows the camera latch mechanism when properly connected.

   NOTE:

   The camera only attaches to the lighthead in one orientation.

   NOTE:

   The camera should be rocked and rotated to ensure it is properly connected.

   a. Select Camera Menu on Integrated Wall Control (IWC).

   b. Verify all functions of the camera operate correctly using IWC.
6. Once camera module functions are verified, press the lighthead symbol on the navigation pane.



Figure 6-32. Install Optional Camera Module



Figure 6-33. Optional Camera Module Installed

6.13 Uninstalling Video Camera Module

1. Rotate lighthead so lens is aimed toward the ceiling.
2. Remove camera by rotating lock slide at top of camera housing.
3. Install Enhanced handle (or basic handle if optioned). See *Section 6.11, Light Handle with Enhanced Handle Core* or *Section 6.10, Light Handle* depending on the equipped handle.

6.14 Install Camera Disposable Sterile Cover

NOTE: Wrinkles in the cover are normal. The appearance of wrinkles in the cover does not compromise the integrity of the cover.

When the lighthead is used with a camera, a disposable sterile cover shall be placed over the camera housing if it is to be used by sterile personnel. (Disposable sterile covers (*Table 6-2*) are available from STERIS.)

WARNING

BIOHAZARD

⚠ Sterile disposable covers are intended for single use only.

WARNING

STERILITY ASSURANCE HAZARD

⚠ Do not use disposable handle covers if its packaging has been damaged, torn or opened; as the sterility of the cover may be compromised.

1. Place sterile cover on camera module.



Figure 6-34. Install Camera Disposable Sterile Cover

2. Push sterile cover completely onto camera module.



Figure 6-35. Camera Disposable Sterile Cover Completely Installed

6.15 Video Camera

Optional video camera is integrated into a removable, modular handle that can be fitted into a camera-ready lighthead. The camera only functions in a camera ready suspension arm. For most systems, this is the bottom arm.

The camera transmits video signal via a fiber optic connection. Treat camera with care; dirt, dust, and debris may affect camera signal quality.

WARNING

PERSONAL INJURY HAZARD

⚠ Fiber optic components may contain 3R lasers. Energy may cause damage to the eye. Care and proper handling, including disconnecting power from Fiber components, shall be observed.

- Harmony Standard Definition (SD) in-light camera is not compatible with HarmonyAIR™ A-Series Surgical Lighting System.
- The A-Series HD Camera Acorn fiber receiver is not compatible with the A-Series 4K camera and the A-Series 4K Camera Oscar Fiber receiver is not compatible with the A-Series HD camera.
- The A-Series cameras include four pairs of +/- buttons. These buttons, when properly covered with a disposable sterile cover, may be used by sterile personnel to adjust the intensity on the light. The buttons perform the same function as the buttons on the Enhanced handle.
- The camera may be gripped to adjust the lighthead position.
- The camera may be rotated to change the spot size of the light.

Whenever video option is used, a separate sterile disposable cover must be fitted over the camera before each procedure (see *Section 6.14, Install Camera Disposable Sterile Cover*). This cover allows the camera to be grasped and used in the same way as an Enhanced handle, including positioning the lighthead for optimal illumination, adjusting lighthead intensity and pattern size, as well as positioning video image field for the best view of the procedure.

The sterile cover must be removed from the camera and discarded after each procedure.

NOTE:

Two camera modules may be used per surgical lighting system (if optioned and appropriately provisioned - two video ready arms).

Once the video camera module has been installed in the lighthead, the camera may be turned on at the Integrated Wall Control (IWC) by selecting the camera menu and then pressing camera On button. Once the camera is initialized, control of camera functions is available through menus on the Integrated Wall Control (IWC). The list of camera features and how they may be controlled is summarized in *Section 6.16, Camera Operation*.



Figure 6-36. Camera Screen

The Integrated Wall Control (IWC) functions by transmitting signals via a control cable to the camera located in the lighthead.

To initiate camera functions, press the Camera icon on the IWC.

6.16 Camera Operation

Refer to *Figure 6-36*. The IWC is used to control the following camera functions:

- **Zoom** — Use this function for determining the level of detail visible in the image field. The Zoom function adjusts the image field continuously between two extremes:

  NOTE:

  Overall distance between the object and the camera, plus the length of zoom, affects the camera's ability to achieve a sharp focus. The greater the zoom length, the less capability the camera has to establish a sharp focus.

- **Telephoto** — At extreme telephoto, the camera captures an image showing great detail in a small area.

  NOTE:

  At extreme telephoto, any motion of the lighthead/camera may be exaggerated (jerky). The field of focus has little depth at this extreme, forcing the Auto Focus function (if enabled) to refocus the camera when any object (such as a hand) enters the image field, or if camera position is adjusted. The camera is also sensitive to light level changes at extreme telephoto.

- **Wide Angle** — At extreme wide angle, the camera captures a large image with less detail than telephoto.

  NOTE:

  At extreme wide angle, the image field possesses a greater depth of focus and less sensitivity to light level changes.

- **Rotate** — Use this function to change orientation of the video field. Image field can be rotated in either **clockwise** or **counterclockwise** directions.

- **Manual Focus** — Use this function to manually set the focus. The Auto Focus function must be toggled off to enable manual focusing. Adjust the clarity of focus by pressing the brightness increase button or brightness decrease button.

  NOTE:

  As instruments are introduced to and removed from the surgical field, the auto focus attempts to focus on the nearest object, possibly causing the image to blur intermittently. To prevent this effect, once the camera has been positioned and focused onto the surgical site, the manual focus mode may be engaged to maintain image clarity during the procedure.

  NOTE:

  For deep cavity illumination, it may be necessary to engage the manual focus to focus beyond the nearest object (i. e., the surface area surrounding the incision) so that the desired image can be viewed clearly.

- **Auto Focus** — Use this function to toggle Auto Focus on or off. When Auto Focus is ON, the camera automatically focuses on the object in the image field closest to the camera lens. The focus adjustment arrows are inactive. When Auto Focus is turned OFF and Manual Focus is on, the Manual Focus text is white. The focus adjustment arrows are active. The camera maintains focus on the last object upon which it was focused, until Auto Focus is turned back on.

  NOTE:

  It may be necessary to toggle Auto Focus OFF when using the camera at extreme telephoto (close up), to prevent the camera from refocusing on hands and other objects introduced into the image field while video imaging procedures.

- **Brightness** — Use this function to affect the overall brightness (or darkness) of the video image. The Bright control can be set to adjust itself automatically. When the brightness Auto mode is selected, the Auto text is white and the brightness adjustment controls are inactive. When Manual mode is selected, the Manual text is white and the brightness adjustment controls are active.
- **Selected Camera** — Use this function to select lighthead with a camera.

6.17 Settings Screen

Introduction

The Settings screen has the following functions (see *Figure 6-37*):

- General – Includes settings for Language, Screen Brightness, and Screen Saver.
- Lighting – Includes settings for Accent Lighting and Auto Intensity.
- Camera – Includes settings for Camera Video Format and Selected Camera.
- Service – Allows service technicians to access service mode.

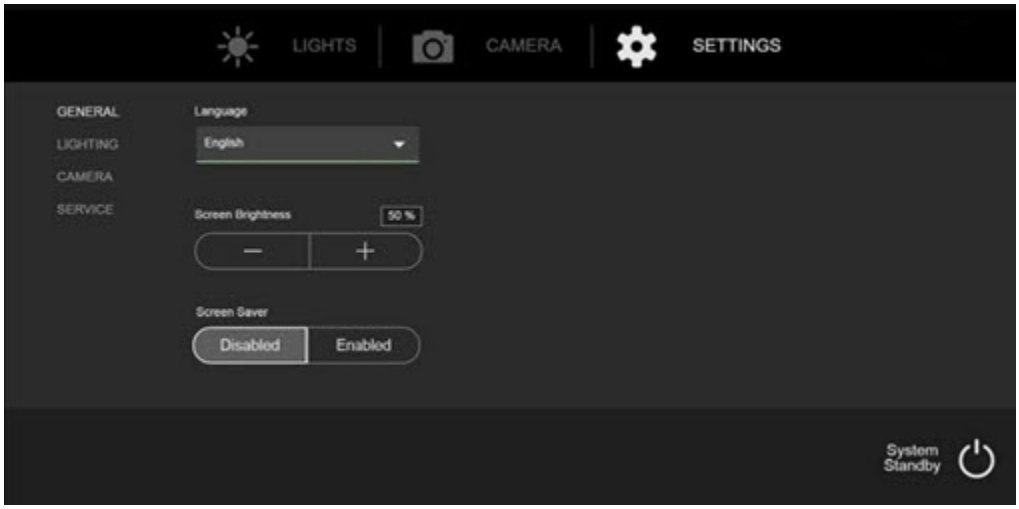

Figure 6-37. Settings Screen

Set the Language
Set Screen Brightness
Set Screen Saver
Enable/Disable Accent Lighting
Set Auto Intensity
Set Camera Video Format

Set the Language

1. Press Settings button on IWC. See *Figure 6-38*.
2. Press General.
3. Select language from drop-down menu.

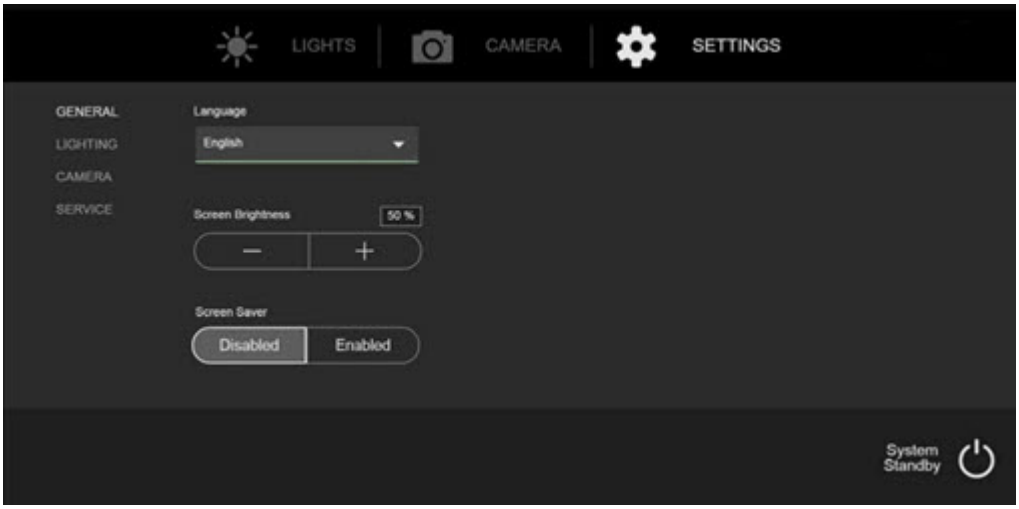

Figure 6-38. Select Language

Set Screen Brightness

1. Press Settings button on IWC. See *Figure 6-39*.
2. Press General.
3. Press (-) button to decrease screen brightness.
4. Press (+) button to increase screen brightness.

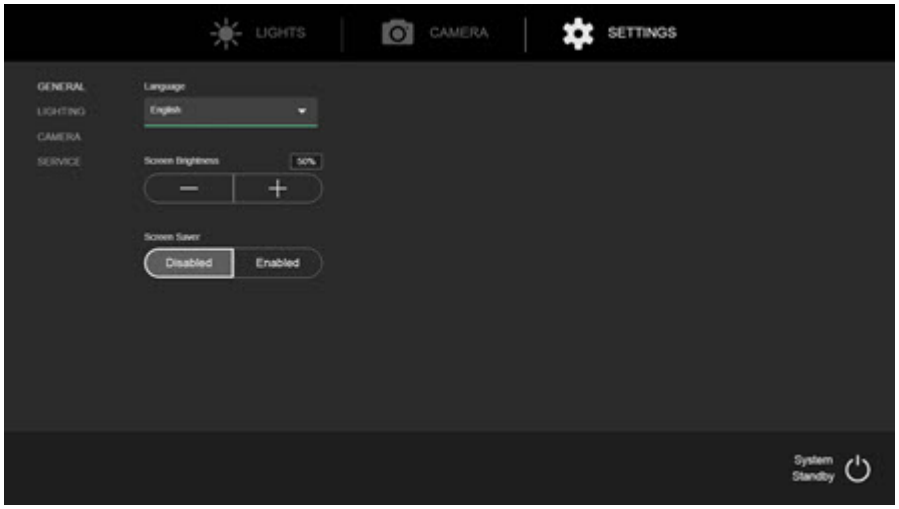

Figure 6-39. Screen Brightness

Set Screen Saver

The screen saver activates after two minutes of inactivity and displays a logo that moves every two minutes. The screen saver activation time and logo cannot be adjusted.

1. Press Settings button on IWC. See *Figure 6-40*.
2. Press General.
3. Under Screen Saver, press Enabled to enable screen saver.
4. Under Screen Saver, press Disabled to disable screen saver.

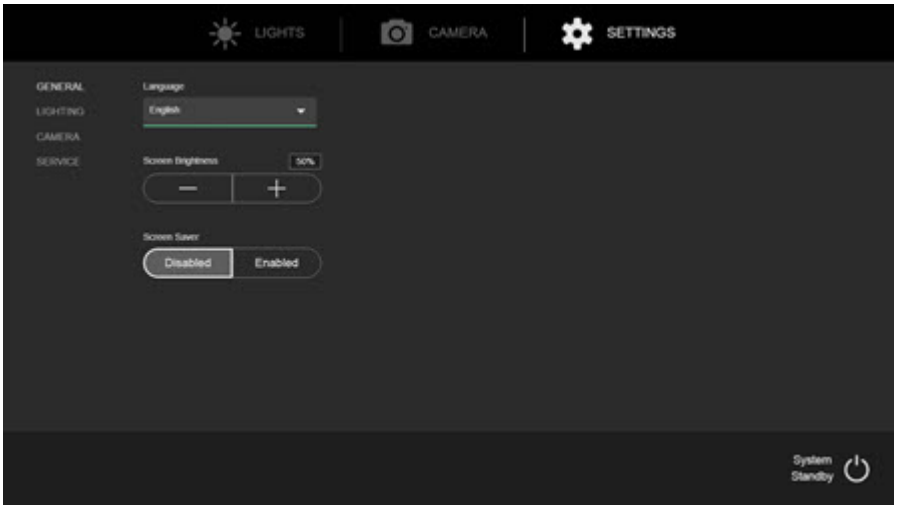

Figure 6-40. Screen Saver

Enable/Disable Accent Lighting

Accent lighting is a green ring of light on the back side of a lighthead. Accent lights are all on or all off.

1. Press Settings button on IWC. See *Figure 6-41*.
2. Press Lighting.
3. Under Accent Lighting, select Enabled to enable accent lighting.
4. Under Accent Lighting, select Disabled to disable accent lighting.

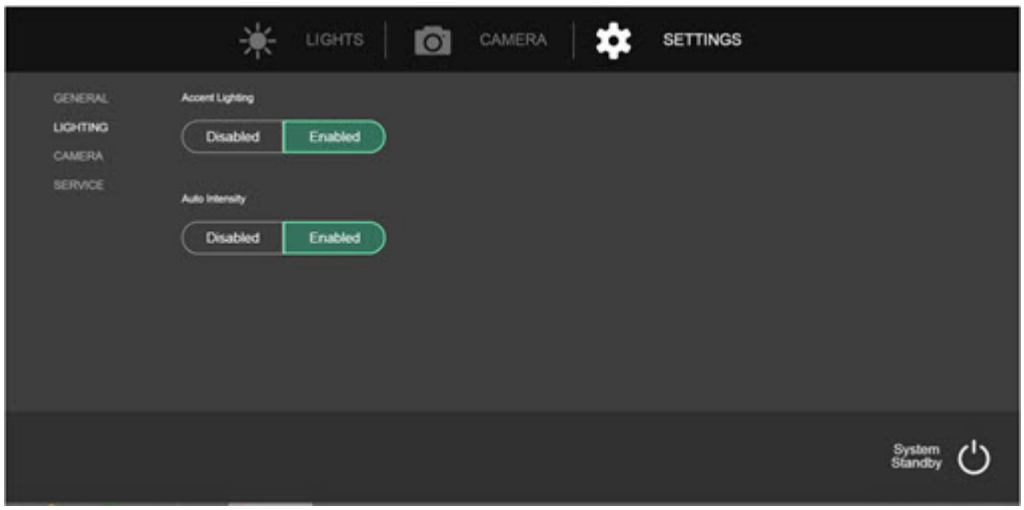

Figure 6-41. Accent Lighting

Set Auto Intensity

Auto intensity is a feature that automatically adjusts the light output to keep the light intensity delivered to the operation site consistent when the lighthead is moved or spot size adjusted. The lighthead uses information about

distance, spot size, and commanded intensity to keep the light delivered to the surgical site consistent when the light is adjusted.

1. Press Settings button on IWC. See *Figure 6-42*.
2. Press Lighting.
3. Under Auto Intensity, select Enabled to enable auto intensity.
4. Under Auto Intensity, select Disabled to disable auto intensity.

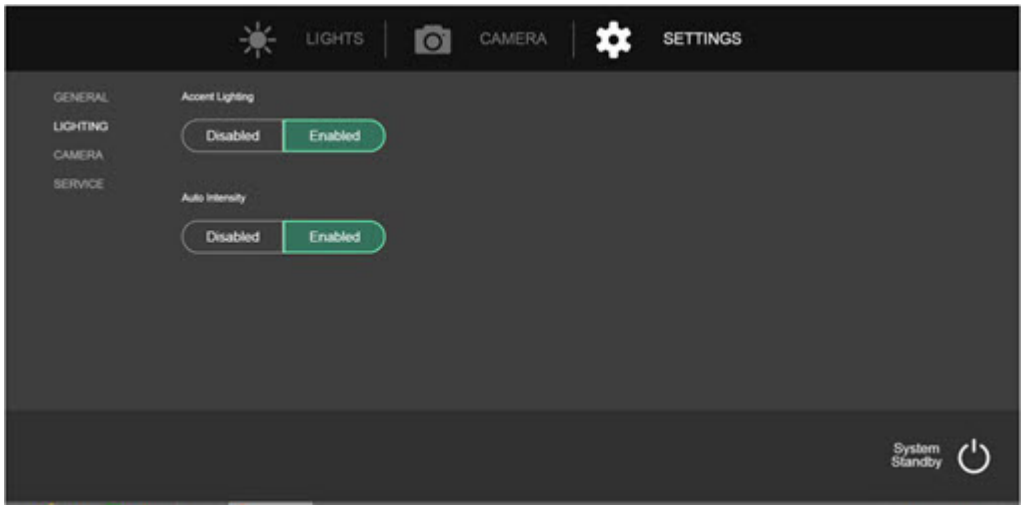

Figure 6-42. Auto Intensity

Set Adaptive Lighting

Adaptive lighting is an optional feature that automatically senses and dims obstructed LED modules and increases light output from unobstructed LED modules to maintain consistent light output while reducing heat to surgical staff obstructing the light.

1. Press Settings button on IWC. See *Figure 6-43*.
2. Press Lighting.
3. Under Adaptive Lighting (if optioned), select Enabled to enable adaptive lighting.
4. Under Adaptive Lighting (if optioned), select Disabled to disable adaptive lighting.

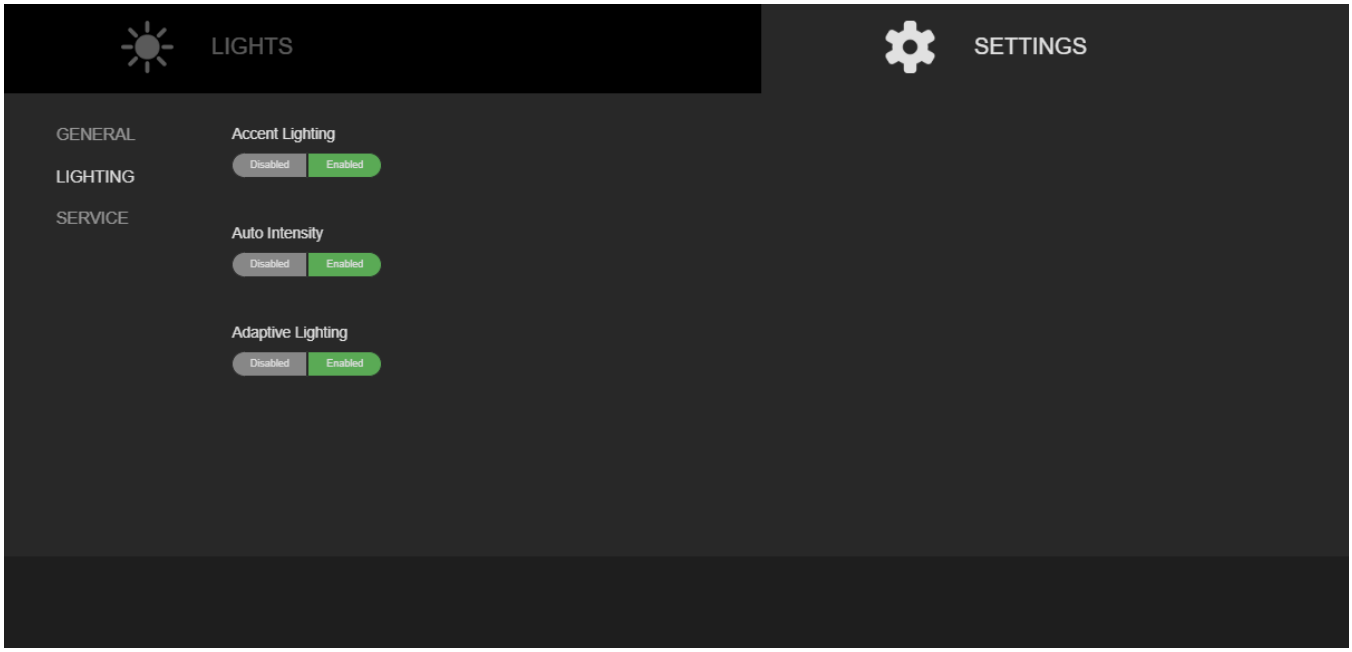

Figure 6-43. Adaptive Lighting

Set Camera Video Format

1. Press Settings button on IWC. See *Figure 6-44*.
2. Press Camera.
3. Under SELECTED CAMERA, select desired light with camera.
4. Under Camera Video Format, click drop-down menu.
5. Press desired camera video format from drop-down menu.

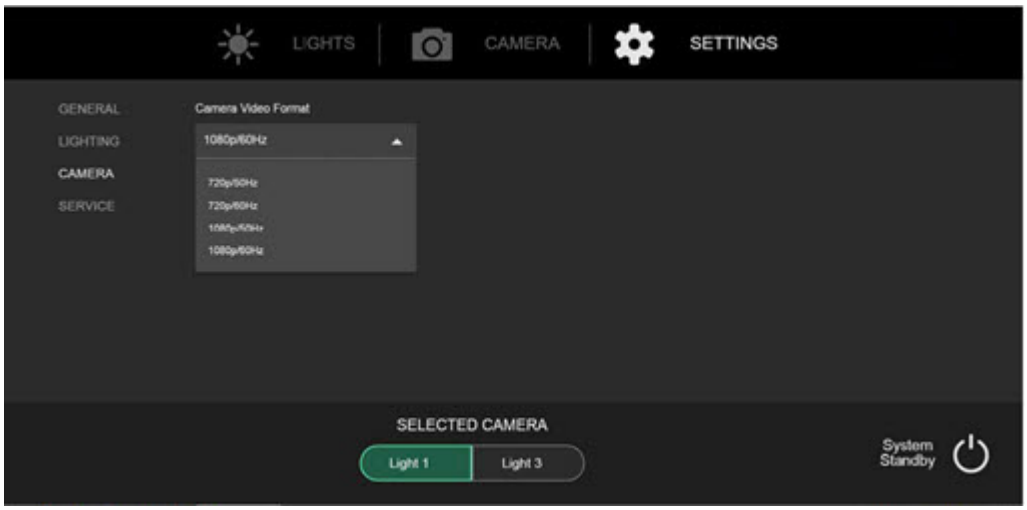

Figure 6-44. Camera Video Format

NOTE:

A-Series HD camera compatible video formats shown in *Figure 6-44*. A-Series 4K camera compatible video formats are 1080p/50Hz, 1080p/60Hz, 2160p/25Hz, and 2160p/30Hz.

6.18 System Standby

The button shown in *Figure 6-45* is used to place the IWC in Standby mode. When the IWC is in standby mode, the IWC displays a "screen saver" display.

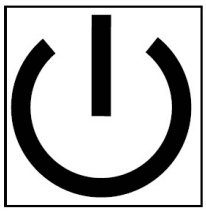

Figure 6-45. System Standby Screen

To resume normal operating mode, touch LCD as directed by the "Touch Here to Activate" text.

The screen saver display shifts to a new position every two minutes. The same screen saver is displayed after two minutes of inactivity (if enabled).

6.19 Ambient Light Fixture

Introduction

The optional ambient light can be installed when the system is initially commissioned, or can be added at a later date as an upgrade.

Operation Overview

Turn Light On Using IWC

Turn Light Off Using IWC

Set Ambient Light to Auto Mode

Operation Overview

The ambient light provides low-level, general illumination in the surgical suite. Illumination from the ambient light fixture can be configured to operate manually (turned on or off at the Integrated Wall Control [IWC]), or the ambient light can be configured to operate automatically (turns off when any system lighthead is turned on and turns on when all system lightheads are turned off). When configured for automatic operation, the ambient light can still be manually turned on or off at the IWC.

Turn Light On Using IWC

1. Press LIGHTS on Integrated Wall Control (IWC). See *Set Ambient Light to Auto Mode*.
2. Under AMBIENT LIGHTING, press On button.

Turn Light Off Using IWC

1. Press LIGHTS on Integrated Wall Control (IWC). See *Set Ambient Light to Auto Mode*.
2. Under AMBIENT LIGHTING, press Off button.

Set Ambient Light to Auto Mode

WARNING

ELECTRIC SHOCK HAZARD

⚠ Avoid possibility of electric shock, and refer any servicing of the ambient light fixture to qualified service personnel.

1. Press LIGHTS on Integrated Wall Control (IWC). See *Figure 6-46*.
2. Under AMBIENT LIGHTING, press Auto button.

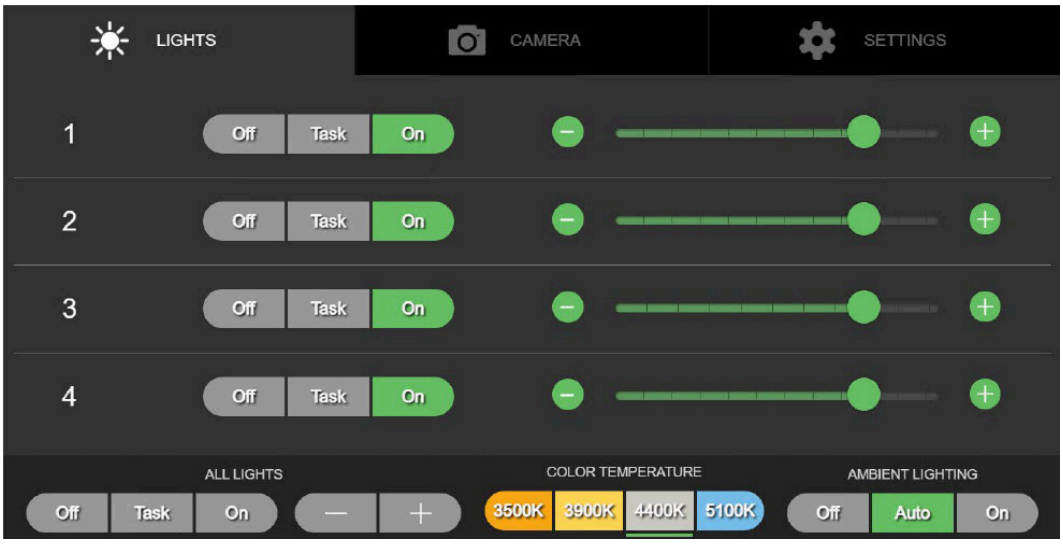

Figure 6-46. Ambient Lighting

6.20 Monitor Arms

The lighting system can be equipped with monitor support arms.

Monitor arms can be included in the lighting system either on the central spindle, or as an auxiliary spindle arm.

Refer to*Figure 6-47* and *Figure 6-48*. Monitor support arms are capable of the following articulations: (1) rotate 240° at auxiliary spindle; (2) rotate 320° at central spindle; (3) rotate 310° at the horizontal extension arm; (4) rotate 320° at the spring arm/yoke spindle; (5) move up or down by pivoting at spring arm knuckle up to 40° (20°, 30° stop locations) up, and 40° down. Monitor yoke also allows (6) tilt15° backward (up) and 90° forward (down).

- For information about the monitor, refer to separate operating instructions supplied with monitor(s).
- Power supply and input signals to monitors may be routed through the suspension wiring from an external video source (external video sources not provided by STERIS).
- Range of upward motion for spring arm can be limited to +20°, +30°, and +40° for accessory spring arms; 0°, 15°, and 30° for lighthead spring arms.

NOTE:

If weight or range of motion for monitor mount system is changed, refer to Installation Instructions, 11007640 for procedures to help ensure proper balancing and motion.

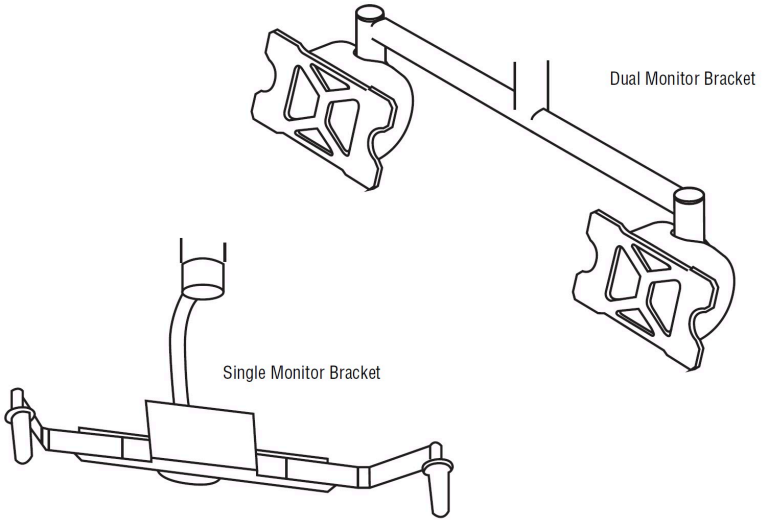

Figure 6-47. HarmonyAIR™ A-Series Surgical Lighting System Monitor Arms, Part 1

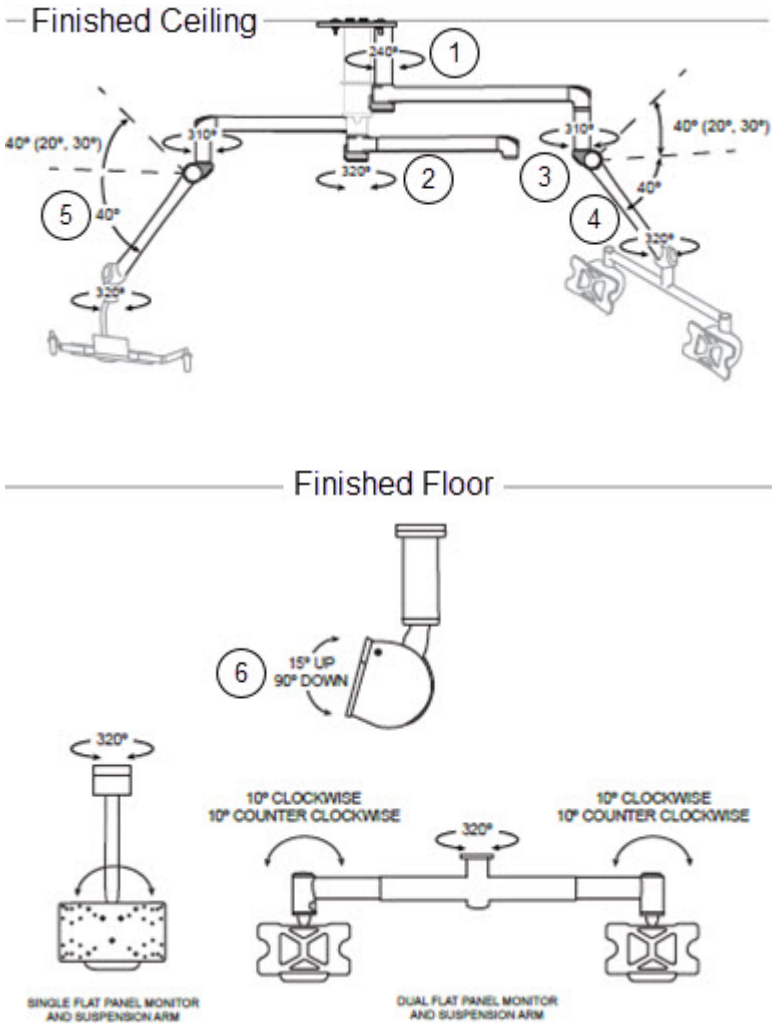

Figure 6-48. HarmonyAIR™ A-Series Surgical Lighting System Monitor Arms, Part 2

Troubleshooting

7.1 Operator Troubleshooting

WARNING

PERSONAL INJURY HAZARD

⚠

- Do not attempt to clean lighthead unless power is turned off and lighthead has cooled sufficiently.
- Do not attempt to adjust suspension system. Refer servicing to qualified service personnel.

WARNING

IMPACT HAZARD

⚠

- Do not remove tension screw from the lighthead spring arm joint until the lighthead has been securely installed onto the spring arm. Note: This warning applies at both installation and de-installation procedures.
- Monitor spring arms must be locked (using build-in safety pin) prior to installing and/or removing the monitor and/or monitor yoke.

Use the following Troubleshooting Chart to identify problems with the surgical lighting system. The chart also offers probable causes and corrections to problems that may occur.

If you are unable to correct the problem with this Troubleshooting Chart, or if a problem occurs that is not described on the chart, please contact STERIS. A representative will arrange to have your equipment promptly put into working order by a STERIS-trained service representative. **Never permit unqualified persons to service the lightheads, suspension arms or electronic system components.**

IMPORTANT:

Refer to separate operating and troubleshooting instructions supplied with monitor(s).

7.2 Color Temperature Controls Do Not Appear on IWC

Condition

Color Temperature controls do not appear on the IWC even though the system is optioned with A-Series ACT lightheads.

General Troubleshooting	Additional Information
Contact STERIS..	1. Contact STERIS.

Maintenance

8.1 Cleaning Equipment

WARNING

PERSONAL INJURY HAZARD

⚠ Do not attempt to clean lighthead unless power is turned off and the lighthead has cooled sufficiently.

CAUTION

POSSIBLE EQUIPMENT DAMAGE

Use of any disinfectant solution OTHER than those listed here may cause discoloration or deformation on the lens surface and other system components:

- Coverage® Plus Germicidal Surface Wipes Disinfecting/Deodorizing/Cleaning Wipes
- Quaternary Ammonium Compound (Quats) with Ethanol solvent
- Quaternary Ammonium Compound (Quats) with Isopropyl Alcohol (IPA) solvent
- Quaternary Ammonium Compound (Quats) with IPA + 2-Butoxyethanol solvent
- Quaternary Ammonium Compound (Quats) + Biguanide
- H2O2 (Hydrogen Peroxide)
- Neutral Cleaners
- Hypochlorite (3 to 6% solution diluted 1:10 in water)

⚠

⚠ The use of H2O2 + PAA (Hydrogen Peroxide + Peracetic Acid) is strongly discouraged for use on all STERIS products.

⚠ Always follow manufacturer instructions for concentrations and use of cleaning products.

⚠ Avoid discoloration of Integrated Wall Control (IWC). Do not clean IWC with povidone-iodine solutions or allow such solutions to contact bezel, bezel label and display surfaces.

⚠ Prevent leakage of fluids into interior of lighthead or Integrated Wall Control (IWC). Ensure no excess fluids remain on lighthead or IWC during and after cleaning.

⚠ Cleaning and disinfecting agents used on this lighting system must be certified by their manufacturer to be compatible with the following materials: polycarbonate (PC), thermoplastic elastomer (TPE), silicone, syndiotactic polystyrene (SPS), acrylic (PMMA).

⚠ DO NOT SPRAY any cleaning product directly onto the lighthead, Integrated Wall Control (IWC) or any system components. Clean IWC screen with a clean, lint-free cloth dampened with 90% isopropyl alcohol. For other system components, dampen a clean, soft cloth with the cleaning solution and wring out the excess moisture.

- Pail
- Sponge
- Lint free cloth wipes
- Rubber gloves
- Mild household detergent such as dishwashing liquid

8.2 Sterilization Recommendation

NOTE: Only the Sterilizable handle should be sterilized. The Non-Sterilizable handle may not be autoclaved.

1. Handle body must be sterilized before use in any surgical procedure. Always inspect handle for cracks or damage prior to sterilization.
2. When placing handle body in sterilizer for processing, best practice is to orient all objects with openings downward, as to allow water (or air) to flow out.
3. Recommended sterilization parameters for sterilizable handle body:

   Maximum Recommended Sterilization Cycles: 500

   Prevacuum (4-Pulse) Conditioning

   Temperature: 270°F (132°C)

   Exposure Time: 4 minutes

   Dry Time: 30 minutes

   Gravity Conditioning

   Temperature: 270°F (132°C)

   Exposure Time: 10 minutes

   Dry Time: 30 minutes

8.3 General Cleaning/Disinfecting Procedure

WARNING

PERSONAL INJURY HAZARD

⚠ Do not attempt to clean lighthead unless power is turned off and the lighthead has cooled sufficiently.

CAUTION

POSSIBLE EQUIPMENT DAMAGE

Use of any disinfectant solution OTHER than those listed here may cause discoloration or deformation on the lens surface and other system components:

- Coverage® Plus Germicidal Surface Wipes Disinfecting/Deodorizing/Cleaning Wipes
- Quaternary Ammonium Compound (Quats) with Ethanol solvent
- Quaternary Ammonium Compound (Quats) with Isopropyl Alcohol (IPA) solvent
- Quaternary Ammonium Compound (Quats) with IPA + 2-Butoxyethanol solvent
- Quaternary Ammonium Compound (Quats) + Biguanide
- H2O2 (Hydrogen Peroxide)
- Neutral Cleaners
- Hypochlorite (3 to 6% solution diluted 1:10 in water)

⚠ The use of H2O2 + PAA (Hydrogen Peroxide + Peracetic Acid) is strongly discouraged for use on all STERIS products.

⚠ Always follow manufacturer instructions for concentrations and use of cleaning products.

⚠ Avoid discoloration of Integrated Wall Control (IWC). Do not clean IWC with povidone-iodine solutions or allow such solutions to contact bezel, bezel label and display surfaces.

⚠ Prevent leakage of fluids into interior of lighthead or Integrated Wall Control (IWC). Ensure no excess fluids remain on lighthead or IWC during and after cleaning.

⚠ Cleaning and disinfecting agents used on this lighting system must be certified by their manufacturer to be compatible with the following materials: polycarbonate (PC), thermoplastic elastomer (TPE), silicone, syndiotactic polystyrene (SPS), acrylic (PMMA).

⚠ DO NOT SPRAY any cleaning product directly onto the lighthead, Integrated Wall Control (IWC) or any system components. Clean IWC screen with a clean, lint-free cloth dampened with 90% isopropyl alcohol. For other system components, dampen a clean, soft cloth with the cleaning solution and wring out the excess moisture.

---

1. Ensure system is turned off and lightheads are cooled sufficiently.
2. Wear rubber gloves.
3. Prepare an approved cleaning or disinfecting solution in accordance with the directions on the container's label.
4. **DO NOT SPRAY** any cleaning product directly onto the lighthead, Integrated Wall Control (IWC) or any system components. Clean IWC with a clean, lint-free cloth dampened with 90% isopropyl alcohol. For other system components, dampen a clean, soft cloth with the cleaning solution and wring out the excess moisture.

5. Thoroughly wipe the areas to be cleaned. All external surfaces of the suspension may be cleaned. Special focus should be put on areas that clinical staff touch (intentionally or inadvertent), and areas that are exposed to biological contaminates from the surgical field.
6. Rinse all surfaces with a clean soft cloth wipe and clear water.
7. Wipe all surfaces dry with a clean, dry soft cloth.
8. If Enhanced sterilizable handle is used without disposable light handle covers, verify the Enhanced handle is sterilized using a standard hospital cycle.

   NOTE: Always sterilize sterilizable handle between procedures if not using disposable covers. Sterilize light handle using conventional hospital sterilization procedures and a standard sterilization prevacuum or gravity cycle. Refer to *Section 8.2, Sterilization Recommendation*.

IMPORTANT: *If disposable lighthandle covers are used, verify a new one is used for each procedure.*

8.4 Manual Cleaning Using Enzymatic Solution for Sterile and Non-Sterile Handle Body

1. Prepare a neutral pH enzymatic cleaning solution by diluting chemistry in accordance with manufacturer's instructions. Any cleaner used must be compatible with aluminum and silicone.
2. Rinse instruments under flowing, warm (68-77°F/20-25°C) utility water for a minimum of one minute, using a soft-bristled nylon brush and/or gloved hands to aid in the removal of visible gross soil.
3. Immerse instruments in cleaning solutions. Soak the instruments for a minimum of five minutes (?? 131°F [55°C]).
4. While device is submerged, use a soft-bristled nylon brush and gloved hands to aid in the removal of visible residual soil, pay attention to rough surfaces and features where soil may be impacted or shielded from the cleaning process. Brush for a minimum of one minute.
5. Rinse instruments under flowing purified water for a minimum of two minutes. Thoroughly and aggressively flush difficult-to-reach areas.
6. Visually inspect for any remaining soil.
7. Repeat steps 3 through 6, if necessary.
8. Allow to air dry or dry the instrument with a clean, disposable, absorbent, non-shedding wipe.

8.5 Automated Cleaning Using Enzymatic Solution for Sterile and Non-Sterile Handle Body

1. Rinse instruments under flowing, warm (68-77°F/20-25°C) utility water for a minimum of one minute, using a soft-bristled nylon brush and/or gloved hands to aid in the removal of visible gross soil.
2. Load instruments into a wire mesh basket. Place a wire mesh lid on top of the instruments to prevent movement of the devices.

   NOTE: Arrange all instruments to allow for drainage of water.
3. Execute the cycle using a pH neutral enzymatic detergent according to the following parameters:

Step	Description	Minimum Temperature	Minimum Cycle Time
1	Pre-Wash	Cold Tap Water	2 Minutes
2	Wash (Detergent concentration per manufacturer's instructions	140°F (60°C)	2 Minutes
3	Rinse	Hot Tap Water	1 Minute

Step	Description	Minimum Temperature	Minimum Cycle Time
4	Thermal Rinse (No lubricant)	180°F (82.2°C)	1 Minute
5	Drying (Set to HIGH)	212°F (100°C)	6 Minutes

4. Upon completion, unload washer-disinfector.
5. Visually inspect each device for remaining soil and dryness. If soil remains, repeat cleaning process.

8.6 Areas to Be Cleaned Before Each Use

NOTE: Refer to the user manual supplied with the monitor for the manufacturer's recommended procedures for cleaning the monitor and the monitor control surface.

WARNING

PERSONAL INJURY HAZARD

⚠ Do not attempt to clean lighthead unless power is turned off and the lighthead has cooled sufficiently.

CAUTION

POSSIBLE EQUIPMENT DAMAGE

- Cleaning and disinfecting agents used on this lighting system must be certified by their manufacturer to be compatible with the following materials: polycarbonate (PC), thermoplastic elastomer (TPE), silicone, syndiotactic polystyrene (SPS), acrylic (PMMA).
- DO NOT SPRAY any cleaning product directly onto the lighthead, Integrated Wall Control (IWC) or any system components. Clean IWC with a clean, lint-free cloth dampened with 90% isopropyl alcohol. For other system components, dampen a clean, soft cloth with the cleaning solution and wring out the excess moisture.

⚠
- Use only recommended cleaning/disinfecting and/or anti-static agents on this light. Some degree of staining, pitting, and/or discoloration could occur if a phenolic-, iodophor-, or glutaraldehyde-based disinfectant is used on the surfaces of this light. Also, alcohol-based or aerosol spray cleaner/disinfectants containing a substantial amount of alcohol in the formula can damage the polycarbonate lens and acrylic sensors.
- Do not scratch optical coating on accessible portions of optic assembly when cleaning; always wear rubber gloves and use only a clean, white, lint-free cloth when wiping external surfaces.
- Prevent leakage of fluids into interior of lighthead or Integrated Wall Control (IWC). Ensure no excess fluids remain on lighthead or panel during and after cleaning.

The following areas of the lighting system must be cleaned and disinfected before each use of the system (see *Section 8.3, General Cleaning/Disinfecting Procedure* for instructions):

- **Lighthead and Monitor Suspension Arms-**Wipe entire suspension arm, including yoke.
- **Lighthead -** Wipe both top and side surfaces.
- **Lighthandle Adaptor -** Wipe all areas of adapter, including those covered when handle is installed.
- **Lens:**

IMPORTANT: *Clean only the exterior surface of the lens.*
See instructions below.

1. Remove lighthandle.
2. Clean/disinfect outer surface of the lens as outlined in *Section 8.3, General Cleaning/Disinfecting Procedure*.
3. Wipe outer surface of the lens with an anti-static cleaner and soft cloth.
4. Do not reinstall a sterile light handle (sterilizable handle only) until immediately before the lighting system is to be used in a surgical procedure.
   - When using a sterilizable light handle, verify light handle is sterilized according to facility sterile protocols between each surgical procedure.
   - When using disposable sterile light handle covers, verify a new one is used for each procedure.

   NOTE: Always sterilize sterilizable handle between procedures. Sterilize light handle using conventional hospital sterilization procedures and a standard sterilization prevacuum or gravity cycle.

- **Integrated Wall Control (IWC) -** Wipe housing and IWC with an anti-static cleaner and soft cloth. See*Section 8.3, General Cleaning/Disinfecting Procedure* for cleaning instructions.

8.7 Preventive Maintenance

NOTE: No part of this system shall be serviced while in use with a patient.

1. Regular service and maintenance MUST be performed only by STERIS or a STERIS-trained technician. Any work performed by inexperienced or unqualified persons or the installation of unauthorized parts could cause personal injury, invalidate the warranty or result in costly damage.
2. Under no circumstances should this equipment be serviced without the Maintenance Manual. The Maintenance Manual (P764338-491) can be purchased by contacting STERIS Customer Service.
3. A detailed Preventive Maintenance schedule and replacement parts list can be found in the Maintenance Manual. The Maintenance Manual can be purchased by contacting STERIS Customer Service.
4. Preventive Maintenance is essential in keeping this equipment in optimal working condition. STERIS recommends establishing an annual maintenance agreement with STERIS service.

   NOTE: Maintenance is necessary to maintain basic safety and essential performance, including EMC performance.

8.8 Inspect Suspension

Start at the highest point on the suspension, and work out toward the lightheads on each suspension arm. Verify proper operation of each braking point. If necessary, adjust each of the brakes in turn, with the goal of eliminating both binding and drift in the system. Refer to *Maintenance Manual, P764338-491*, if necessary.

Fully articulate monitor arm about each pivot point. Verify range of motion, ease of movement and that picture/display does not flicker on monitor. Verify monitor does not drift when positioned.

8.9 Inspect Integrated Wall Control (IWC)

1. Check control center operation by cycling it OFF and ON. No fault should be indicated.

   NOTE: IWC may take 30 seconds to turn on.
2. Cycle through command menus on display.
   a. Verify proper operation of touch screen.
   b. Verify display of the correct amount of lightheads, ambient lights, and cameras.
   c. Verify fault icon is not flashing on light control screen.

Replacement Parts

Parts listed in this section are those that are necessary to do minor maintenance on the lighting fixture. Any maintenance beyond replacement of the components listed should be performed only by an authorized STERIS service representative.

When ordering, please include the part number, description, and quantity for each replacement part requested.

To order directly, call STERIS; or visit https://eservice.steris.co

Description	Part Number (Catalog Number)
A-Series Lighthead	Call STERIS
HarmonyAIR A-Series Surgical Lighting System Maintenance Manual	P764338-491
Sterile Handle Cover (100 count)	LB83
Sterile Universal Handle Cover (200 count)	LB82
Sterile HD Camera Cover (100 count)	LB84
Sterile 4K Camera Cover (100 count)	LB85
Tension Screw	10099448
Single Use LOCTITE® 243*	11004115

* LOCTITE® is a registered trademark of Henkel Technologies.

EMC Compliance Technical Data for Wall Mounted IWC with Integrated Power Supplies

Table 10-1. Guidance and Manufacturer's Declaration - Electromagnetic Emissions - for all ME Equipment and ME Systems (per IEC 60601-1-2 clause 5.2.2.1)

The HarmonyAIR™ A-Series Surgical Lighting System with or without video monitor and video-monitor related components is intended for use in the electromagnetic environment specified below. The Customer or the user of the HarmonyAIR™ A-Series Surgical Lighting System with or without video monitor and video-monitor related components should assure that it is used in such an environment.		
Emissions test	**Compliance**	**Electromagnetic Environment Guidance**
RF emissionsCISPR 11	Group 1	The HarmonyAIR™ A-Series Surgical Lighting System with or without video monitor and video-monitor related components uses RF energy only for its internal function. Therefore, its RF emissions are very low and are not likely to cause any interference in nearby electronic equipment.
RF emissionsCISPR 11	Class A	The HarmonyAIR™ A-Series Surgical Lighting System with or without video monitor and video-monitor related components is suitable for use in all establishments, other than domestic and those directly connected to the public low-voltage power supply network that supplies buildings used for domestic purposes.
Harmonic emissionsIEC 61000-3-2	Class A	
Voltage fluctuations/flicker emissions IEC 61000-3-3	Complies	

Table 10-2. Guidance and Manufacturer's Declaration - Electromagnetic Immunity for all ME Equipment and ME Systems (per IEC 60601-1-2, Clause 5.2.2.1)

The HarmonyAIR™ A-Series Surgical Lighting System with or without video monitor and video-monitor related components is intended for use in the electromagnetic environment specified below. The Customer or the user of the HarmonyAIR™ A-Series Surgical Lighting System with or without video monitor and video-monitor related components should assure that it is used in such an environment.			
Immunity test	**IEC 60601 Test Level**	**Compliance Level**	**Electromagnetic Environment Guidance**
Electrostatic discharge (ESD) IEC 61000-4-2	±8 kV contact ±15 kV air	±8 kV contact ±15 kV air	Floors should be wood, concrete or ceramic tile. If floors are covered with synthetic material, the relative humidity should be at least 30%.
Electrical fast transient/burst IEC 61000-4-4	±2 kV for power supply lines ±1 kV for input/output lines	±2 kV for power supply lines ±1 kV for input/output lines	At 100 kHz, mains power quality should be that of a typical commercial or hospital environment.

Table 10-2 Guidance and Manufacturer's Declaration - Electromagnetic Immunity for all ME Equipment and ME Systems (per IEC 60601-1-2, Clause 5.2.2.1) (Continued)

Surge IEC 61000-4-5	±1 kV line(s) to line(s) ±2 kV line(s) to earth	±1 kV line(s) to line(s) ±2 kV line(s) to earth	Mains power quality should be that of a typical commercial or hospital environment.
Voltage dips IEC 61000-4-11	0% U_T 0,5 cycle at 0°, 45°, 90°, 135°, 180°, 225°, 270° and 315° 0% U_T 1 cycle 70% U_T 30 cycles (60 Hz) Single phase at 0%	0% U_T 0,5 cycle at 0°, 45°, 90°, 135°, 180°, 225°, 270° and 315° 0% U_T 1 cycle 70% U_T 30 cycles (60 Hz) Single phase at 0%	Mains power quality should be that of a typical commercial or hospital environment. If the user of the HarmonyAIR™ A-Series Surgical Lighting System with or without video monitor and video-monitor related components requires continued operation during power mains interruptions, it is recommended that the HarmonyAIR™ A-Series Surgical Lighting System with or without video monitor and video-monitor related components be powered from an uninterruptible power supply or a battery.
Voltage Interruption IEC 61000-4-11	0% U_T 250 cycle (50 Hz)or 300 cycle (60 Hz)	0% U_T 250 cycle (50 Hz)or 300 cycle (60 Hz)	
Power frequency (50/60 Hz) magnetic field IEC 61000-4-8	30 A/m	30 A/m	Power frequency magnetic fields should be at levels characteristic of a typical location in a typical commercial or hospital environment.
NOTE: U_T is the AC mains voltage prior to application of the test level.			

Table 10-3. Guidance and Manufacturer's Declaration - Electromagnetic Immunity for ME Equipment and ME Systems that are not Life-Supporting (per IEC 60601-1-2, Clause 5.2.2.1)

The HarmonyAIR™ A-Series Surgical Lighting System with or without video monitor and video-monitor related components is intended for use in the electromagnetic environment specified below. The Customer or the user of the HarmonyAIR™ A-Series Surgical Lighting System with or without video monitor and video-monitor related components should assure that it is used in such an environment.			
Immunity test	**IEC 60601 Test Level**	**Compliance Level**	**Electromagnetic Environment Guidance**
Conducted RF IEC 61000-4-6 Radiated RF IEC 61000-4-3	3 Vrms at 0.15 - 80 MHz and 6V atm ISM Frequency 150 kHz to 80 MHz 3 V/m 80 MHz - 2.7 GHz and 9 -28V/m at 385 - 6000 MHz, Pulsed Mode	3 Vrms at 0.15 - 80 MHz and 6V atm ISM Frequency 3 V/m	Portable and mobile RF communications equipment should be used no closer to any part of the HarmonyAIR™ A-Series Surgical Lighting System with or without video monitor and video-monitor related components, including cables, than the recommended separation distance calculated from the equation applicable to the frequency of the transmitter. **Recommended separation distance:** $d = [\frac{3,5}{3}]\sqrt{P} = 1,2\sqrt{P}$ 150 kHz to 80 MHz $d = [\frac{3,5}{3}]\sqrt{P} = 1,2\sqrt{P}$ 80 MHz to 800 MHz $d = [\frac{7}{3}]\sqrt{P} = 2,3\sqrt{P}$ 800 MHz to 2.5 GHz where P is the maximum output power rating of the transmitter in watts (W) according to the transmitter manufacturer and d is the recommended separation distance in metres (m). Field strengths from fixed RF transmitters, as determined by an electromagnetic site survey,a should be less than the compliance level in each frequency range.b Interference may occur in the vicinity of equipment marked with the following symbol: 
Proximity Magnetic IEC 6100–4–39	8 A/m or 138.06 dBμ A/m (30 kHz) 65 A/m or 156.26 dBμ A/m (134.2 kHz) 7.5 A/m or 137.5 dBμ A/m (13.56 MHz)		8 A/m test only applies to Home Healthcare Fields
NOTE: At 80 MHz and 800 MHz, the higher frequency range applies.			

Table 10-3 Guidance and Manufacturer's Declaration - Electromagnetic Immunity for ME Equipment and ME Systems that are not Life-Supporting (per IEC 60601-1-2, Clause 5.2.2.1) (Continued)

NOTE: These guidelines may not apply in all situations. Electromagnetic propagation is affected by absorption and reflection from structures, objects and people.
a: Field strengths from fixed transmitters, such as base stations for radio (cellular/cordless) telephones and land mobile radios, amateur radio, AM and FM radio broadcast and TV broadcast cannot be predicted theoretically with accuracy. To assess the electromagnetic environment due to fixed RF transmitters, an electromagnetic site survey should be considered. If the measured field strength in the location in which the HarmonyAIR™ A-Series Surgical Lighting System with or without video monitor and video-monitor related components is used exceeds the applicable RF compliance level above, the HarmonyAIR™ A-Series Surgical Lighting System with or without video monitor and video-monitor related components should be observed to verify normal operation. If abnormal performance is observed, additional measures may be necessary, such as reorienting or relocating the HarmonyAIR™ A-Series Surgical Lighting System with or without video monitor and video-monitor related components.
b: Over the frequency range 150 kHz to 80 MHz, field strengths should be less than 3 V/m.

Table 10-4. Recommended Separation Distances Between Portable and Mobile RF Communications Equipment and the HarmonyAIR™ A-Series Surgical Lighting System with or without Video Monitor and Video-Monitor Related Components (per IEC 60601-1-2, Clause 5.2.2.1)

The HarmonyAIR™ A-Series Surgical Lighting System with or without video monitor and video-monitor related components is intended for use in an electromagnetic environment in which radiated RF disturbances are controlled. The Customer or the user of the HarmonyAIR™ A-Series Surgical Lighting System with or without video monitor and video-monitor related components] can help prevent electromagnetic interference by maintaining a minimum distance between portable and mobile RF communications equipment (transmitters) and the HarmonyAIR™ A-Series Surgical Lighting System with or without video monitor and video-monitor related components as recommended below, according to the maximum output power of the communications equipment.

Rated maximum output power of transmitter (W)	**Separation distance according to frequency of transmitter (m)**		
	150 kHz to 80 MHz $d = [\frac{3,5}{3}]\sqrt{P}$	80 MHz to 800 MHz $d = [\frac{3,5}{3}]\sqrt{P}$	800 MHz to 2.5 GHz $d = [\frac{7}{3}]\sqrt{P}$
0,01	0.12	0.12	0.23
0,1	0.38	0.38	0.73
1	1.2	1.2	2.3
10	3.8	3.8	7.3
100	12	12	23

For transmitters rated at a maximum output power not listed above, the recommended separation distance d in metres (m) can be estimated using the equation applicable to the frequency of the transmitter, where P is the maximum output power rating of the transmitter in watts (W) according to the transmitter manufacturer.

NOTE: At 80 MHz and 800 MHz, the separation distance for the higher frequency range applies.

NOTE: These guidelines may not apply in all situations. Electromagnetic propagation is affected by absorption and reflection from structures, objects and people.