HexaLux™

Examination light

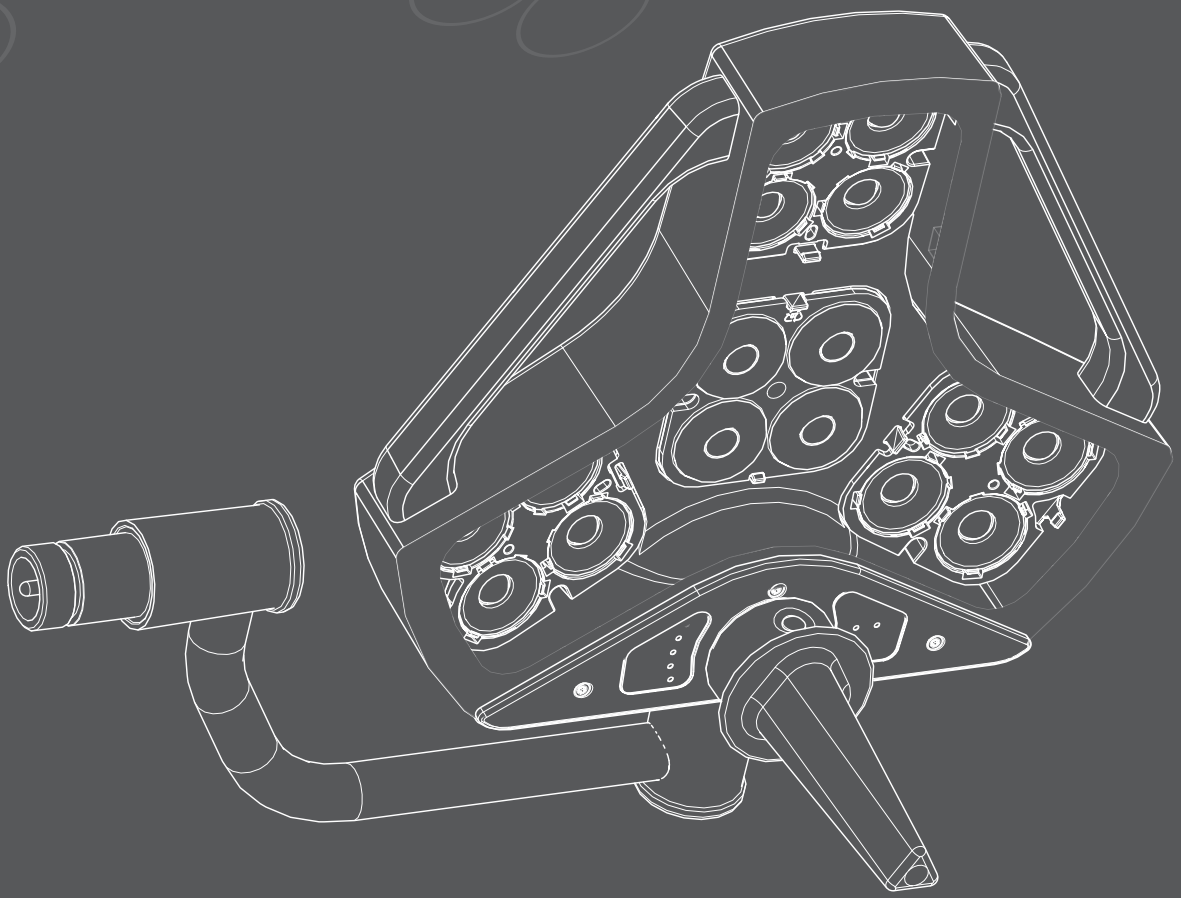

User manual
[operation & maintenance]

STERIS®

11064834 REV A HexaLux

INDEX

1 - Quality requirements 3
2 - Safety instructions 4
3 - Symbols used 6
4 - Overview 7
5 - characteristics 9
6 - Installing the sterilizable handle 11
7 - Operation 11
8 - Cleaning / Disinfection / Sterilization 14
9 - List of recommended spare parts 15
10 - Quick troubleshooting guide 16
11 - Environmental protection 16
12 - Maintenance schedule 16
13 - Electromagnetic environment 17

Dear Customers, STERIS would like to thank you for choosing the HexaLux™ examination light, which has been designed to cover all your needs.
Please read these instructions carefully, to enable you to use the product as effectively and safely as possible.

STERIS Corporation
2720 Gunter Park Dr. East
Montgomery, AL 36109 • USA
334-277-6660/800-444-9009
www.steris.com

1 - QUALITY REQUIREMENTS

The STERIS quality system holds the following certification:

- **ISO 13485***

For the design, manufacture, sale, installation, and after-sales service of operating tables, tabletops, transfer trolleys, and their extensions and accessories, lighting systems, washers and disinfection units.

The HexaLux™ examination light has been designed in compliance with international medical electrical equipment regulations: Marking medical ETL CLASSIFIED intertek 32702 equipment, with respect to electrical shock, fire and mechanical hazards only in accordance with:

- **ANSI/AAMI ES60601-1:2005/(R)2012/A2:2021**
- **CAN/CSA-C22-2 NO. 60601-1:14/A2:22**
- **IEC 60601-1 (EN 60601-1)***
- **IEC 60601-2-41 (EN 60601-2-41)***
- **IEC 60601-1-2 (EN 60601-1-2)***
- **IEC 60601-1-6 (EN 60601-1-6)***

Intended purpose:
HexaLux™ Examination Light is a medical device intended to illuminate the body of a patient during examination procedures, to support diagnosis or treatment.

Indication for use
HexaLux™ Examination Light has no indication for use, which means that this medical device is not used to diagnose, prevent, monitor, treat, alleviate, compensate, replace, modify or control any clinical condition of a patient.

Clinical benefit
HexaLux™ Examination Light does not bring any direct positive impact on the health of the patient which would be measurable or meaningful.
By illuminating the body of a patient in a safe and appropriate manner, then the examination lights will facilitate the diagnosis or treatment operations carried out on the patient: this will have a positive impact on management of the patient by the medical staff during the examination procedure.

Contraindication – Undesirable side-effect – Residual risks
There is no contraindication, undesirable side-effect or residual risk associated with the use of HexaLux™ Examination Light. All safety instructions related to the use of this medical device are listed in chapter 2.
There is no limitation for the use of HexaLux™ Examination Light and associated accessories, except that these devices must not be used in a surgical room for surgical procedures.

Patient target group
HexaLux™ Examination Light is not directed to a particular patient population: they are supposed to suit any type of patient, regardless of age, anatomy, gender, etc.
HexaLux™ Examination Light is reusable medical device. It is intended for multiple patients and multiple uses on each of them.

Intended user
HexaLux™ Examination Light and associated accessories should only be used by qualified staff authorized to work in the healthcare facilities. This medical device shall be operated in a controlled environment by a professional familiar with appropriate techniques with such equipment.

Essential performance
There is no essential performance for HexaLux™ Examination Light since its performance can be interrupted without causing a hazardous situation for the patient.

Intended lifetime
The intended lifetime of HexaLux™ Examination Light is set at 10 years, provided that the conditions of use, the cleaning and maintenance instructions listed in this user manual are correctly followed.

Placing on the market
The HexaLux™ examination light was launched in 2016.

Any utilization going beyond the aforementioned conditions is deemed to be not for intended purposes. Only the user is liable for any loss or damage arising from this.
HexaLux™ examination light is a class 1 medical device and is registered with ANSM (French national medicinal product and healthcare product safety agency).

* According to the version in force

2 - SAFETY INSTRUCTIONS

⚠ Warning: This device cannot be modified without the manufacturer's authorization.

⚠ Any serious incident that occurs in relation to this medical device should be reported to STERIS and the competent authority of the member state in which the user and/or patient is established.

Operation

⚠ Light is an energy that can potentially dry out tissue. The user should adapt the lighting level to the needs of the examination carried out.

⚠ This product emits possibly hazardous optical radiation. Do not stare at the light emitted from the HexaLux™ light head. Eye injury may occur.

⚠ Do not look directly at the light source, given its high intensity and the blue light in the LED.

⚠ The optical radiation emitted by this product complies with the exposure limits for reducing the risk of photobiological hazards in IEC 60601-2-41.

⚠ When the handle is being used sterile, ensure that only staff with sterile gloves are manipulating the handle.

⚠ Do not use the light suspension to carry or lift objects. Do not hang from the light: improper swinging on the arm or the lighthead may cause serious injury.

⚠ HexaLux™ examination lights are not intended for upward lighting. Do not tilt the lights upside down.

⚠ In some configurations, due to the presence of several hinges on the suspensions, there is a risk of fingers being caught. Avoid placing hands near the hinges and move the extension arms with caution.

⚠ Avoid handling the suspension roughly, particularly excessive shocks against the end of travel stop. Do not bump the lighthead into walls or other equipment. Always use handles when positioning the lighthead during examination procedures, or when cleaning or servicing the examination lighting system.

⚠ Avoid handling the sterilizable handle and the external handles roughly. When using the light control handle, do not exert excessive loads and torque on it.

⚠ Power cord shall be handled carefully. Do not pull them up, do not force their entry in the mains socket IEC.

Installation

⚠ The lighting system should not be installed in areas subject to an explosive risk (presence of flammable anesthetic gases).

⚠ HexaLux™ examination lights must not be used in the vicinity of strong magnetic fields (MRI environment).

⚠ HexaLux™ examination lights are not intended to operate in an oxygen rich-environment.

⚠ To prevent any risk of electric shock, this appliance should only be connected to a grounded power supply system.

⚠ Installation and integration operations should only be assigned to STERIS technicians or qualified technicians and should be carried out according to the installation instructions prepared by STERIS.

⚠ Disconnect all utilities to the examination light before servicing. Do not install the examination lighting system unless all utilities have been properly locked out. Always follow OSHA lockout tagout and electrical safety related work practice standards.

⚠ For fixed installations (wall and ceiling) take care to avoid colliding the light head against the wall (no stop limitations).

⚠ One disconnect device accessible to operator and which have mains indicator, must be provided during the installation of wall and ceiling examination lights.

Maintenance

⚠ The safety, reliability and proper operation of the lighting system can only be ascertained and guaranteed by STERIS. Repairs or adjustments should only be assigned to STERIS technicians or approved technicians.

⚠ Dismantling some sub-assemblies may impact operation and safety. For example:

- In the case of a procedure on the electrical power supply,
- In the case of a procedure on the suspension arms and the balancing system

⚠ Observe the maintenance schedules set out by STERIS and described in this document.

⚠ Never try to adjust the suspension yourself.

⚠ STERIS recommends a preventive maintenance or a control of batteries every year.

⚠ During maintenance and repair, only original parts must be used.

⚠ No interventions may be undertaken on HexaLux™ examination lights system before all electrical power is switched off and the supplies made safe.

⚠ No part of HexaLux™ examination lights shall be serviced or maintained while in use with a patient.

Cleaning / disinfection / Sterilization

⚠ Avoid infiltration of liquids inside the light head. This type of infiltration is liable to affect or damage the lighting system.

⚠ Do not use any products based on chlorine or its derivatives, because this might cause excessive corrosion.

⚠ To prevent damaging equipment, do not use abrasive pads or cleaners. Do not spray cleaner or disinfectants directly on equipment.

⚠ Do not dismantle the suspension components (spring arms, light head yoke) during cleaning procedures. Only qualified STERIS maintenance personnel are authorized to dismantle these components.

⚠ Check that power to the examination lighting system is OFF before cleaning.

⚠ Do not attempt to clean the light head unless light head has cooled sufficiently.

⚠ After cleaning procedures on mobile versions, ensure that no residual water remains on the mains socket IEC.

⚠ Remove all water residue before connecting the power cord to the mains.

⚠ To ensure satisfactory sterilization, take care not to allow any dirt to penetrate inside the handle.

⚠ After each sterilization and before each additional use of the sterilizable handle:

- Check that there is no cracking and that the latch works
- Replace the handle if it shows crack or deformation
- Refit the handle in the light and lock by turning (click)

⚠ Sterilizable handles should be disposed of in a similar manner to that of other hazardous hospital waste

⚠ Ensure that the sterilization process has been successfully carried out before putting the sterilizable handle into service.

Environmental conditions

- Transport / storage: temperature 0°C-60°C / 32°F-140°F, humidity 10-75% non-condensing, pressure 500 to 1060hPa
- Operation: temperature 10°C-35°C / 50-95°F, humidity 30-75%, pressure 800 to 1060hPa

⚠ HexaLux™ examination light is not intented for outdoor use, and shall not be exposed to high humidity for extented periods.

FCC Part 15

⚠ This equipment has been tested and found to comply with the limits for a Class A digital device, pursuant to part 15 of the FCC Rules. These limits are designed to provide reasonable protection against harmful interference when the equipment is operated in a commercial environment. This equipment generates, uses, and can radiate radio frequency energy and, if not installed and used in accordance with the instruction manual, may cause harmful interference to radio communications. Operation of this equipment in a residential area is likely to cause harmful interference in which case the user will be required to correct the interference at his own expense.

Electrical safety

⚠ Warning: To prevent any risk of electric shock, this appliance should only be connected to a grounded power supply system.

⚠ The mobile floor stand must always be positioned so that the power cord with its mains plug can be disconnected easily when connected to the examination light.

⚠ The power cord with its mains plug is thus the device used to isolate the mobile floor stand version from supply mains.

⚠ It is better to use the batteries option isolated from the mains if you have doubts about the protective ground.

⚠ In case of any damage to the power supply cable or plug, do not connect the equipment and immediately contact STERIS technician.

Moving the mobile stand

⚠ When moving the mobile floor stand version apart from examination procedures, phase fold up the spring arm to the mast stand in order to improve the stability of the device.

⚠ Before moving the equipment, ensure the path is free of obstacles. Move the mobile base floor stand carefully. Adapt the speed to the environment (corridor width, corner angles, doors, etc...)

⚠ Before moving the equipment, ensure that the power cord is disconnected.

⚠ Before starting any examination procedures, ensure that the mobile floor stand is stable. Never step on the mobile base of the examination light.

⚠ Do not place any objects on the mobile base because they could impair the proper operation of the product.

Connections

⚠ Always use the power cord provided by STERIS.

⚠ Avoid handling the cables roughly when connecting or disconnecting the power cord set.

⚠ When power cord is connected to the examination light, and therefore is lying on the floor, pay attention to this power cord when moving around the examination light.

Antistatic link

⚠ Use the examination light on an antistatic floor, or connect it to an equipotential cable using the socket designed for this.

Electromagnetic compatibility

⚠ If the examination light is used close to other electrical equipment, ensure that these comply with the regulations in force regarding electromagnetic compatibility.

Potential equalization conductor

⚠ Connect together potential equalization conductors to overcome the problem of differing potentials across networks.

⚠ Originally intended for cardiac areas, it protects the patient from electric shock during procedures where even small potentials may cause harm.

⚠ When a potential equalization conductor is connected, the examination light MUST NOT be used with a defibrillator.

⚠ When the use of the potential equalization conductor allows to create an electromedical system, then this system must meet the requirements of IEC 60601-1.

3 - SYMBOLS USED

Local light control (keypad)			
	Light On/Off		Light intensity indication
	Decrease light intensity		Increase light intensity
	Low batteries charge indicator		
Identification labels			
	Caution: consult accompanying documents		Warning: electricity
	Date of manufacture (YYYY/MM/DD)		Name and address of manufacturer
	No stepping on surface		Do not push
	Caution		
	Direct current		Alternating current
	Equipotentiality plug		Protective earth ground
	Maximum weight capacity of the accessory (basket, shelf)		Maximum weight of mobile versions, with their accessories
	Medical equipment with respect to electrical shock, fire and mechanical hazards only in accordance with standards listed in section 1		Compliance with essential requirements of European legislation
	WEEE Directive: the product must be recycled	REF	Product reference
MD	Medical device	SN	Serial number
	Temperature limit		This way up
	Atmosphere pressure limitation		Fragile, handle with care
	Humidity limitation		Handle with care
	Stacking limit by number (N=7)	UK REP	UK Authorized Representative
UK CA	UKCA Marked (UK Conformity Assessed) Compliance with essential requirements of UK Medical Devices Regulations 2002	CH REP	Swiss Authorized Representative

4 - OVERVIEW

The HexaLux™ examination light is suitable for use in examination, treatment and emergency procedures. The HexaLux™ examination light provides medical staff the ability to vary the field diameter and light intensity in order to ensure effective lighting of the patient and procedure site HexaLux™ examination light is available in four configurations: mobile unit with or without batteries, ceiling or wall mounted.

1) MOBILE VERSION WITH OPTIONS

The mobile version offers a range of practical accessories meant to facilitate operation in a clinical environment (retractable power cord reel, battery, basket, shelf).

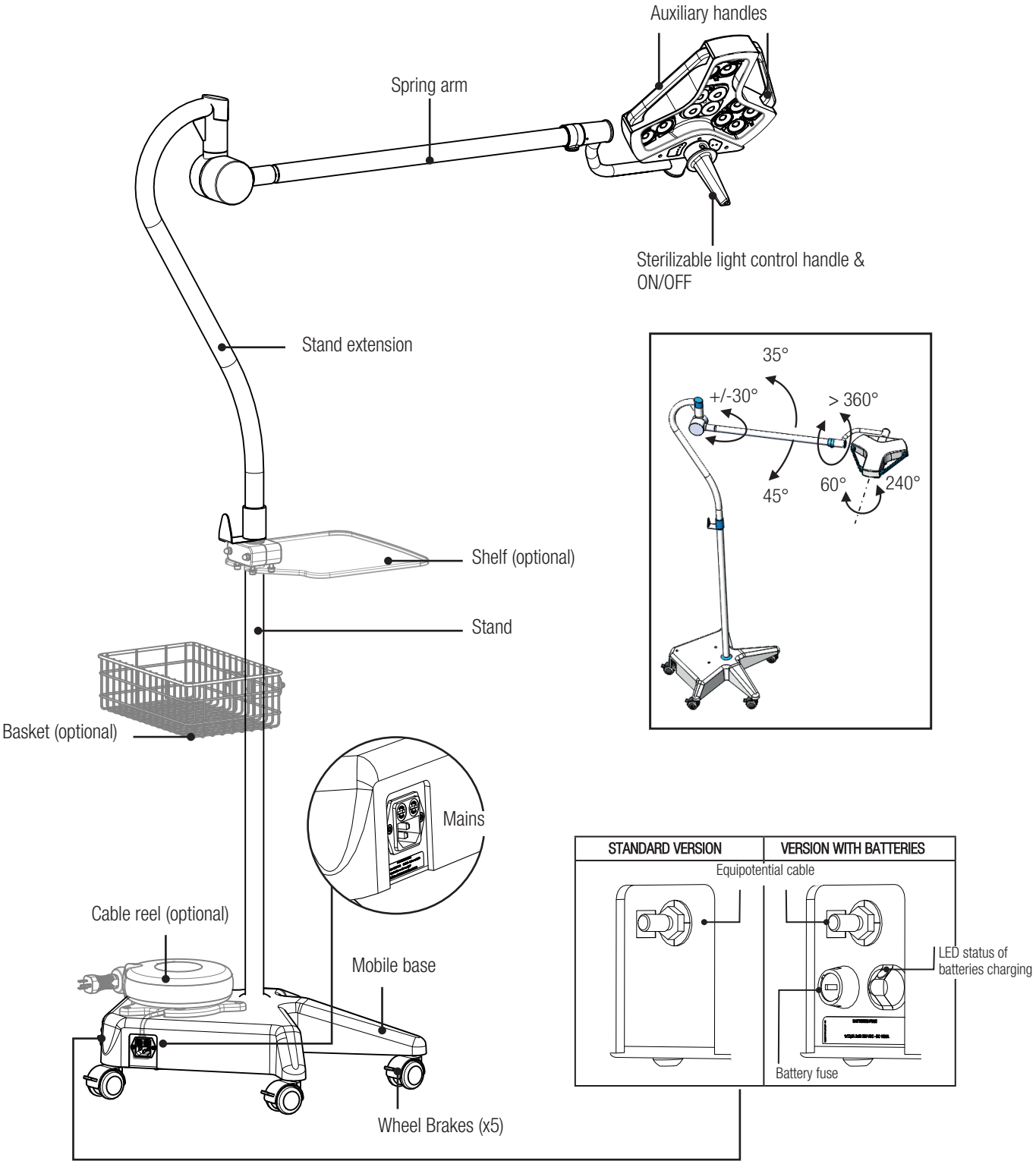

STERIS

2) CEILING MOUNTED VERSION

Suspended on a vertical tube, the HexaLux™ examination light allows an approximate 5'9" (1762 mm) radial coverage area.

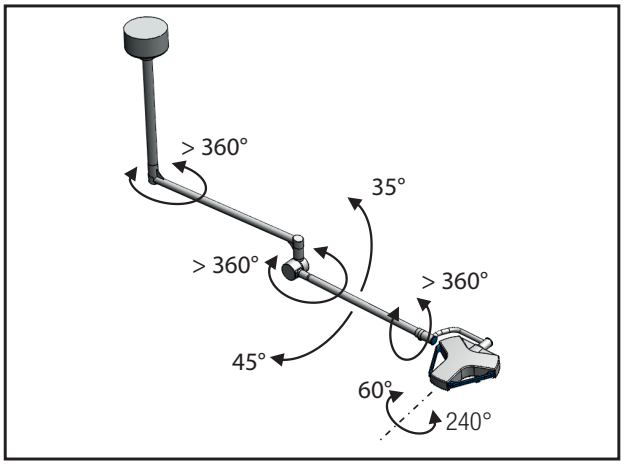

3) WALL MOUNTED VERSION

The same horizontal extension arm and spring arm are used on the ceiling and wall-mounted version, allowing an approximate 5'9" (1762 mm) radial coverage area.

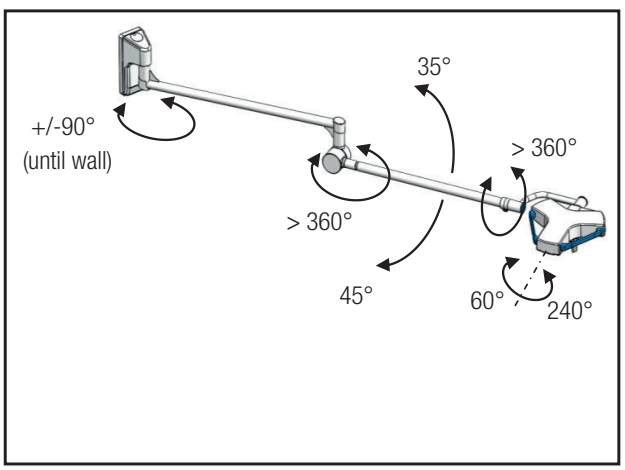

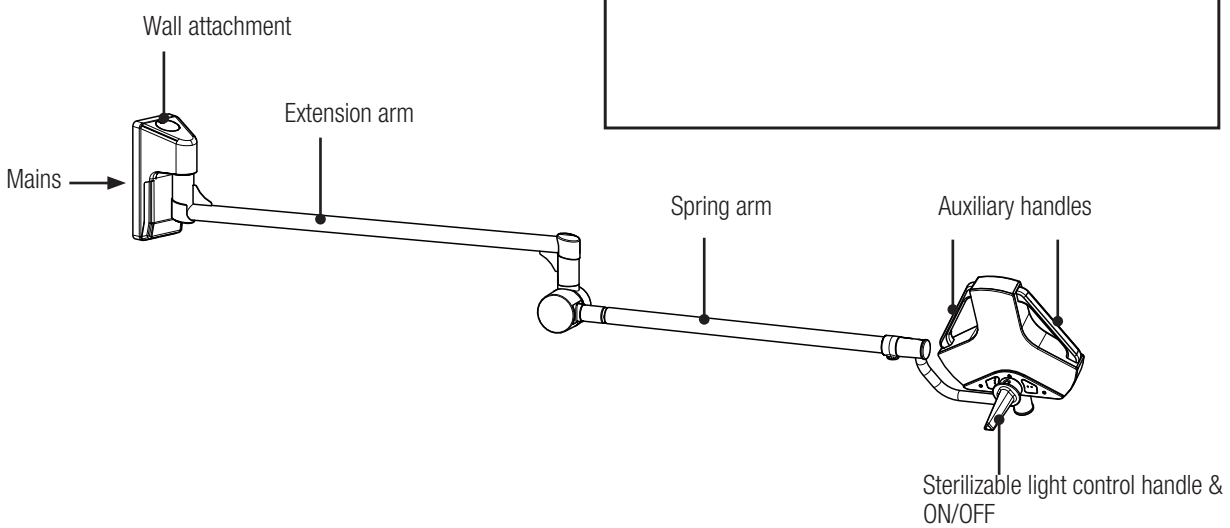

5 - CHARACTERISTICS

Electrical characteristics:

Mains	100-240 VAC 50/60Hz (except for mobile with batteries: 50-60 Hz) 1 phase max 104 VA (for mobile standard version) 1 phase max 90 VA (for mobile with batteries)
Protection	Class 1
Fuse (accessible to operator)	Mobile standard version: 2xT2.5A 250V PC1500A Mobile version with batteries: 2xT2.5A 250V PC1500A (mains) 1xT2.5A 250V PC1500A (batteries)
Batteries	2x 12V 7Ah Sealed lead
Standalone operation	Min. 3h00 to 6h30 max.

Charge/discharge indicator	on mobile base + light head
Operation	Continuous
Equipotential plug	For Mobile versions: Din 4280 cord not supplied

Optical characteristics:

Characteristics	Unit	At the center of the light pattern
Central illuminance measured ($E_{C,Ref}$) (+/-10%) Dref= 85cm	lux	22 000 to 100 000
Color temperature (+/-6%) Dref= 85cm	K	4400
Ra Color rendering index (+/-6%) Dref= 85cm		95
R9 Red rendering index (+/-10%) Dref= 85cm		97
d50 light field diameter at 50% $E_{C,Ref}$ (+/-10%) Dref= 85cm	cm (inch)	7.7 to 10 (2.8 to 3.9)
d10 light field diameter at 10% $E_{C,Ref}$ (+/-10%) Dref= 85cm	cm (inch)	13.5 to 18 (5.1 to 7)
Depth of illumination (L1 + L2 at 60% $E_{c,Ref}$) (+/-6%) Dref= 85cm	cm (inch)	63 (24.8)
Maximum central illuminance $E_{C,MI}$ (+/-6%) measured at Dmi = 70cm at Step 5	Lux	122 000
Maximum total energy irradiance E_{Total}, (+/-10%) measured at Dmi= 70cm at Step 5	W/m^2	450
Life span (L70 up to 30% loss of illumination)	hrs	50000

Step	Picture	Diameter D10 of Pattern cm (inch)	Illumination Lux (Foot Candle)
		Dref= 85cm +/-10%	Dref= 85cm +/-10%
Off	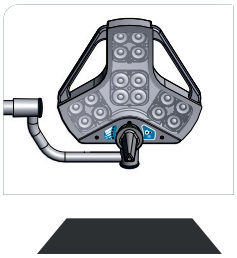	0	0 (0)
1	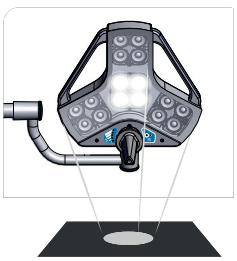	13.5 (5.1)	22000 (2044)
2	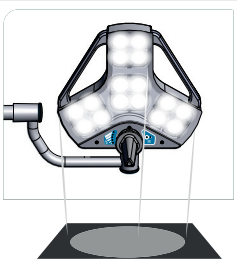	18 (7)	45000 (4181)
3	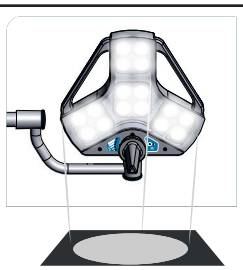	18 (7)	60000 (5574)
4	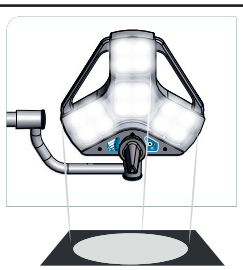	18 (7)	80000 (7432)
5	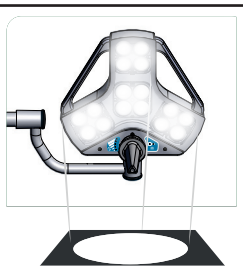	18 (7)	100000 (9290)

6 - INSTALLING THE STERILIZABLE HANDLE

a) Installing / removing the sterilizable handle

1) Set-up
Insert the sterilizable handle (1) onto its mount (2) and orient it by turning it until you hear a “click” indicating that the handle is in place.

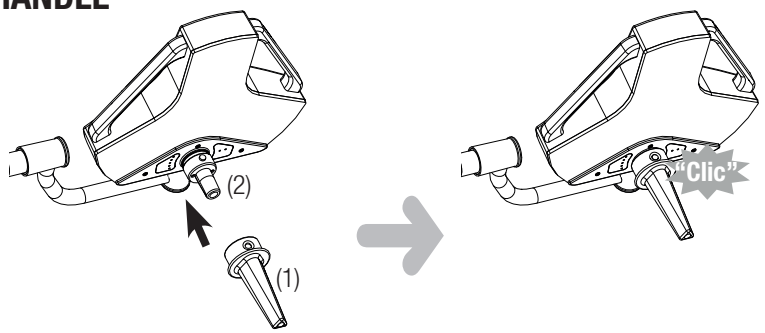

2) Removal
To remove the sterilizable handle (1) from the light, keep the push-button (2) pressed down while pulling the handle downwards, to remove it from its mount (3).

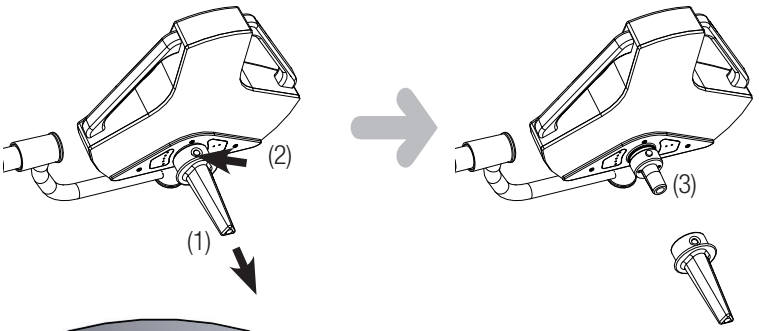

7 - OPERATION



Step 5
Step 4
Step 3
Step 2
Step 1

Light intensity indicator

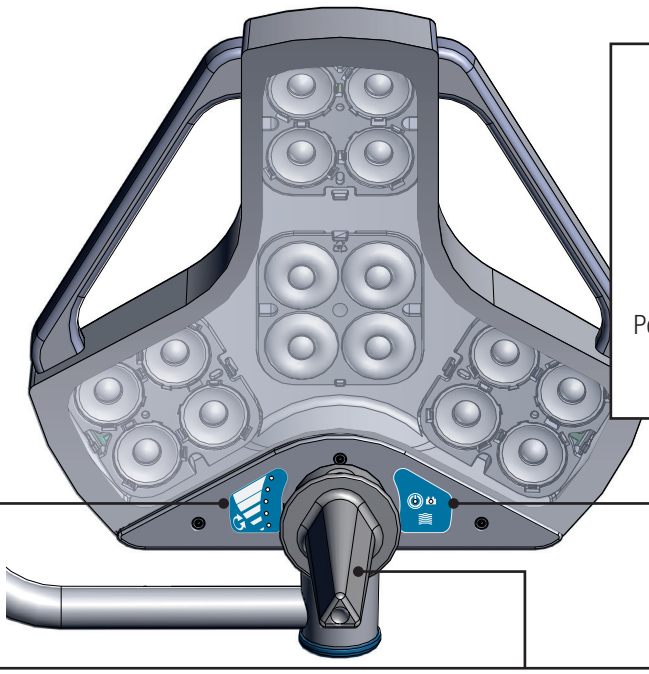

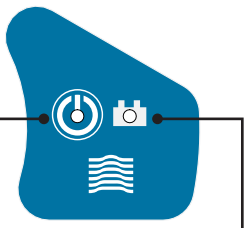

Power supply

Low battery charge indicator

LIGHT CONTROL HANDLE

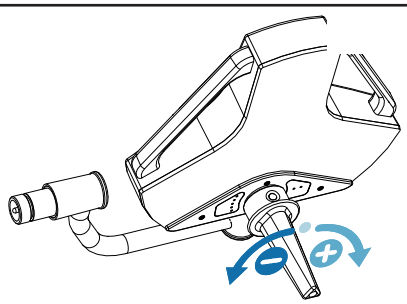

ON/OFF
The HexaLux™ examination light is equipped with a "ON" switch and a "OFF" switch integrated in the handle.

Turn and hold at the stop for 2 seconds.

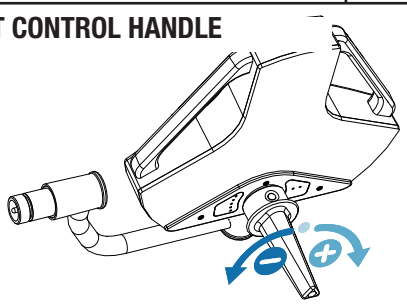

Adjusting the light intensity
The light intensity level is adjusted by pulsing clockwise ⊕ and counterclockwise ⊖ the light intensity level indicator includes 5 LEDs, indicating the 5 possible lighting levels.

Pulse clockwise to increase intensity
Pulse counterclockwise to decrease intensity

The sign is present even on the standard version with the mains connection and no battery.

7.1 - OPERATING THE MOBILE VERSION

7.1.1 USE OF THE WHEEL BRAKES

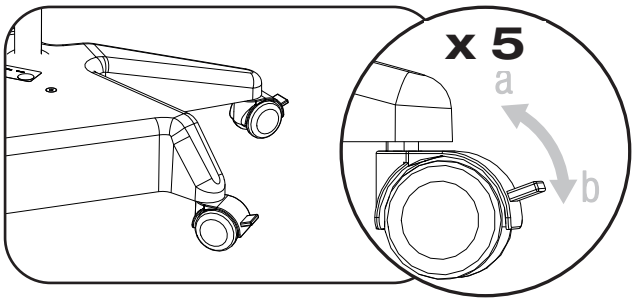

WHEEL BRAKES

To brake: press the pedal STOP (b) down

To release brake: put the pedal STOP in high position (a)

7.1.2 MOVING THE MOBILE VERSION

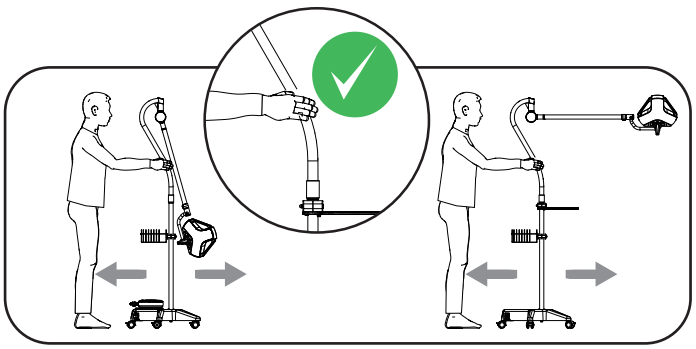

Recommended

Mandatory

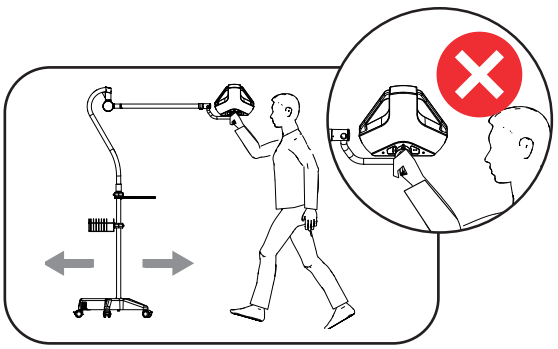

Forbidden

Risk of tipping

7.1.3 SETUP FOR THE MOBILE VERSION

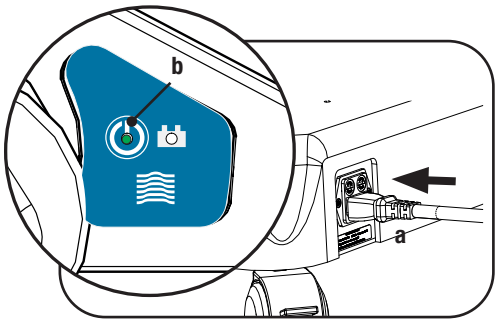

Connecting to the mains (standard version)

- Insert the fuse in the fuse holders supplied separately (2 for mains)
- Push and turn to connect the fuse holders
- Check that the mains voltage matches the indications on the HexaLux™ examination light
- Connect the power cord to the mains socket IEC (a). The power supply indicator should light up in green color (b)

Power plug should be inserted into a contact protected power socket that has been installed and grounded in accordance with National Electric Code (NEC) and local codes. STERIS recommends the use of the power cord set or reel-in option (shown on page 13).

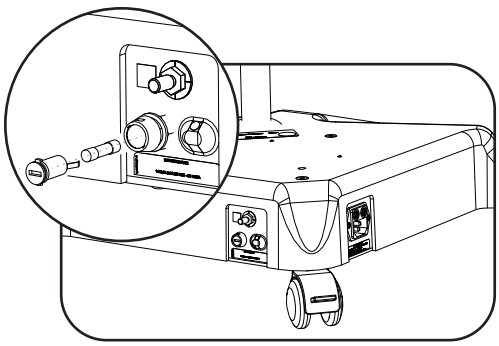

In-service (version with battery)

For safety reasons, during transport, the battery protection fuse is packed separately.

- Insert the fuse in the fuse holders supplied separately (2 for mains and 1 for the battery)
- Push and turn to connect the fuse holders

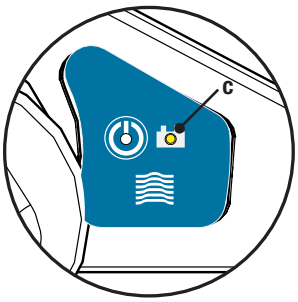

When the light head is turned on, the power supply indicator lights up in green color. The low battery LED indicator blinks in yellow (c) when the batteries need to be recharged by connecting the base to the mains.
When it flashes yellow, the mobile version should be plugged in quickly, because the mobile version will not work if the batteries are completely discharged, even if it is then plugged into the mains.

For an optimal charge of the batteries, it is recommended to leave the light switched OFF.
For an optimal life time of batteries, it is recommended to:

- Recharge batteries systematically after each use (no-use conditions or short-duration storage).
- Recharge batteries systematically when the indicator “Low battery charge” switches on and blinks in yellow.
- Avoid the deep discharge (when the power supply indicator is turned off).
- If the HexaLux™ examination light is due to remain out of use for a significant period of time (> 1 month), firstly fully recharge the batteries and secondly remove the batteries fuse before putting it in storage condition.
- Respect the maintenance recommendations of batteries given in chapter 2 “Safety instructions”.

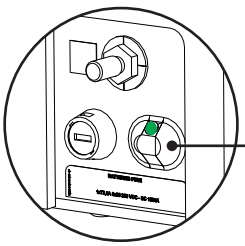

Power LED / charge of the battery	Appearance	% Charge
	Orange	0-80%
	Yellow	80-95%
	Green	95-100%

8 - CLEANING / DISINFECTION / STERILIZATION

The user should contact the sanitary specialists of the facility to ensure compliance with national hygiene and disinfection requirements (standards and directives). The recommended products and procedures should be applied. If in doubt regarding of the compatibility of the active substances to be used, contact the local STERIS after-sales support department.

8.1 - CLEANING AND DISINFECTING THE LIGHT:

Before any cleaning, check that the light has been switched off and has cooled down.
Wear the recommended personal protective equipment (gloves, goggles).
After cleaning procedures on mobile versions, ensure that no residual water remains on the mains socket IEC.

Remove all water residue before connecting the power cord to the mains.

General cleaning, disinfection and safety instructions:

- Remove the sterilizable handles.
- Wear rubber gloves.
- Clean the lighting system and the suspension using a surface detergent and follow the manufacturer's dilution and temperature recommendations.
- Rinse using a well-wrung cloth, wipe and leave to dry.
- Apply a disinfectant evenly, according to the manufacturer's recommendations.
- Leave to dry.
- Rinse using a moistened cloth, to remove any residual product.

Cleaning the lighting surface

- Check that the light has been switched off and has cooled down sufficiently.
- Prepare a disinfectant or cleaning solution intended for plastic materials (PC/PMMA).
- NEVER SPRAY ANYTHING directly onto the light. Moisten a soft cloth using cleaning solution and squeeze out the excess moisture.
- Scrub the surfaces to be cleaned thoroughly.
- Rinse all the surfaces using a well-wrung clean soft cloth and clear water
- Wipe all surfaces with a clean and dry soft cloth.

Steam Cleaning

The steam cleaning is not recommended for HexaLux™ Examination Light. However, if this method of cleaning is used, do not spray water near the wall and ceiling attachments.
Ensure at least a distance of 50cm with these attachments.
Use non-aggressive spray nozzles. Respect the rinsing and drying instructions described above.

Examples of recommended products

STERIS recommends the use of cleaning and disinfectant chemicals whose compounds are based on isopropyl alcohol (<45%) or based on a quaternary ammonium.

Products which are not recommended

Glutaraldehyde, phenol, Iodine, bleach solution, ethanol, Betadine®.

8.2 - CLEANING AND STERILIZING STERILIZABLE HANDLES

8.2.1 - Preparation before cleaning

Immediately after using the handle, take a soft cloth to clean external dirt. Store the handles in a location allowing them to be kept moist, to facilitate future cleaning. Take care to arrange so as to prevent any internal soiling.

8.2.2 - Cleaning

- Immerse the handles in a detergent solution.
- Follow the manufacturer's recommendations.

8.2.3 - Inspecting cleanliness

- During cleaning, regularly inspect the handles for cleanliness to ensure that no internal or external soiling remains.
- Otherwise, repeat the cleaning process or use an ultrasonic cleaning process.
- Rinsing: remove the detergent solution completely, rinsing with plenty of clean water.

8.2.4 - Drying

- Wipe the handle using a lint-free clean cloth.
- Before use, the handles should undergo steam sterilization.

8.2.5 - Sterilization

The previously cleaned handles should undergo steam sterilization, according to the following instructions and cycles:

Country	Sterilization cycle	Temperature	Time [min]
USA & Canada	Gravity	250°F 121°C	30
USA & Canada	Pre-vacuum	270°F 132°C	4
USA & Canada	Pre-vacuum	275°F 135°C	3
France	ATNC (Prion) (Pre-vacuum)	134°C	18
Other countries	Pre-vacuum	Comply with national regulations	

- Ensure that each handle is clean before continuing the process.
- Wrap the handles in sterilization wrap (double wrap or equivalent).
- The handles can also be packed in paper/plastic sterilization bags, for easier identification and reuse.
- Place the handles, with the opening facing down, on the sterilizer trays.
- Attach the biological and/or chemical indicators for monitoring the sterilization process, according to current regulations.
- Start the sterilization cycle, according to the sterilizer manufacturer's instructions.
- Ensure that the sterilization process has been successfully carried out before putting the sterilizable handle into service.

This sterilizable plastic handle has a limited lifetime expectancy because of the sterilization cycles it will undergo.
As a consequence, after each sterilization and before each additional use of the sterilizable handle:

- Check that there is no cracking and that the latch works
- Replace the handle if it shows crack or deformation
- Refit the handle in the light and lock by turning (click)

9 - LIST OF RECOMMENDED SPARE PARTS

REFERENCES	DESCRIPTIONS	
EXLHAN3	Kit of 3 HexaLux™ examination light sterilizable handles	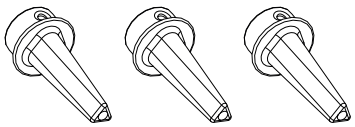
EXLEU13: 13 ft Europe EXLUS10: 10 ft US EXLUK13: 13 ft UK EXLAU13: 13 ft Australia EXLBR13: 13 ft Brazil EXLCN13: 13 ft China EXLIT13: 13 ft Italy EXLJP10: 10 ft Japan EXLZA13: 13 ft South Africa EXLCH13: 13 ft Switzerland	Retractable power cord reel – up to 13 feet (4m)	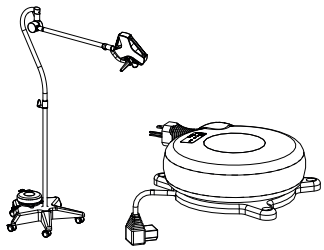
EXLPCEU: Europe EXLPCUS: US EXLPCUK: UK EXLPCAU: Australia EXLPCBR: Brazil EXLPCCN: China EXLPCIT: Italy EXLPCJP: Japan EXLPCZA: South Africa EXLPCCH: Switzerland	Power cord set (3.5m)	
EXLSHLF: Shelf EXLCLMP: Fastener	Small shelf for mobile stand	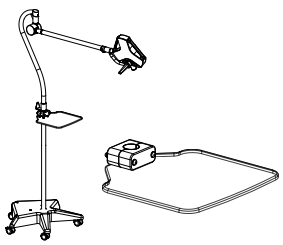
EXLCLMP: Fastener EXLBASK: Basket	Basket for mobile stand	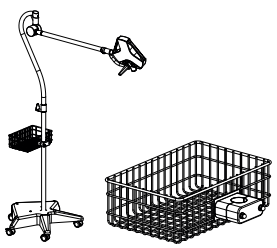

10 - QUICK TROUBLESHOOTING GUIDE

FAULT OBSERVED	POSSIBLE CAUSE	CORRECTIVE ACTION
Light does not switch on	- Mains power voltage	- Make sure the handle is held for 2 seconds - Check whether another appliance is running on the same system - Check the fuse - Check the battery (if equipped - mobile version)
	- Other cause	- Call the STERIS after-sales department
The sterilizable handle does not insert into the mount correctly	- Sterilization setting overshoot (temperature, time)	- Check that the locking mechanism (audible click) and the handle assembly work
	- The maximum service life has been exceeded/the handle is deformed	- Replace the handle
Light deviation	- Suspension tube verticality defect - Unstable ceiling structure - The brakes are not fastened tightly enough	- Check the verticality and ceiling structure - Call the STERIS after-sales department - Adjust the brakes
Light too flexible or too hard to handle	- Incorrect brake setting - Lack of lubrication	- Adjust the balancing system - Call the STERIS after-sales department

In the event of a repeated or major malfunction, contact the STERIS technical department. Any modification or repair to this device by personnel not approved by STERIS is prohibited.

11 - ENVIRONMENTAL PROTECTION

Product recycling: this equipment should be disposed of with a licensed electrical and electronic component recycling authority.

12 - MAINTENANCE SCHEDULE

12.1- Preventive maintenance

To retain the initial performances and reliability of your examination light, maintenance and inspection operations should be performed once a year as follows:

- During the warranty period, by a STERIS technician or a STERIS-approved agent,
- Outside the warranty period, by a STERIS technician or a STERIS-approved agent, or the hospital technical department.

Before any maintenance, check that the light has been switched off and has cooled down

12.2 - Level one maintenance

a) Daily inspection:

- Check that the sterilizable handle clicks into place and locks correctly.
- Check the position of the arm.

The daily inspection must be performed by qualified personnel, approved by the body in charge of maintenance operations in the surgical facility.

b) Annual inspection (should be carried out by an approved technician):

b.1- Safety points

Check the following points:

- Proper tightening of the securing screws on the suspension tube and position of the seals
- Assembly of the arm(s)
- Additional light attachment stop segments, light disassembly and sleeve lubrication
- Attachment of all caps and plugs
- Presence of stop segments and check the wear of stop segment
- Condition and tightness of brakes of spring arm
- Check the stops (angular range...)
- Check the caster and the brakes

b.2 - Other inspections

- Nominal lighting: see technical data.
- Earth continuity: 0.2 Ohm max.
- Suspension tube verticality.
- Balancing system setting.
- Sterilizable handle locking mechanism.
- Visual inspection inside and outside the lighthead (connection of wiring harnesses, state of electronic cards, general appearance and cleanliness...)
- Control of the proper operation of the battery. (Any battery change shall be carried out only by STERIS technicians or approved technicians)
- Control of the presence and proper features of electronic components (fuses, IEC socket, snap ferrite, etc.)

For this type of procedure, contact the STERIS-approved after-sales department. The circuit diagrams, component lists, technical descriptions or any other useful information for the service personnel assigned to install or to repair the HexaLux™ examination light are available from STERIS on request.

13 - ELECTROMAGNETIC ENVIRONMENT

Essential performance of HexaLux™ examination light is the delivery of illumination and the limitation of energy to the operating field. As this equipment is not intended to be used in operating rooms, HexaLux™ examination light can be interrupted without any hazard for the patient in case of failure of the light due to EM disturbance. The loss of essential performance described above does not incluce any problem for the operator and the patient.
WARNING: Use of this equipment adjacent to or stacked with other equipment should be avoided because it could result in improper operation. If such use is necessary, this equipment and the other equipment should be observed to verify that they are operating normally.
WARNING: Use of accessories, transducers and cables other than those specified or provided by the manufacturer of this equipment could result in increased electromagnetic emissions or decreased electromagnetic immunity of this equipment and result in improper operation
WARNING: Portable RF communications equipment (including peripherals such as antenna cables and external antennas) should be used no closer than 30 cm (12 inches) to any part of the HexaLux™ examination light, including cables specified by the manufacturer. Otherwise, degradation of the performance of this equipment could result. Before connecting any equipment, the user should make sure that they respect the applicable regulations and that their connections comply with the manufacturers' recommendations. HexaLux™ examination light needs special precautions regarding electromagnetic compatibility and needs to be installed and put into service according to EMC information provided in this instruction of use. HexaLux™ examination light is compliant with standard IEC 60601-1-2 : 2014

Guidance and manufacturer's declaration - Electromagnetic emissions			**List of the cables & accessories in conformity with the emissions and immunity testing**
The HexaLux™ examination light is intended for use in an electromagnetic environment specified below. The customer or the user of HexaLux™ examination light should assure that it is used in such environment.			Power cord set EXLPCEU Power cord reel EXLEU13
Emission test	**Compliance**	**Electromagnetic environment – guidance**	
RF emissions CISPR 11	Group 1	The HexaLux™ examination light uses RF energy only for its internal function. Therefore, its RF emissions are very low and are not likely to cause any interference in nearby electronic equipment.	
RF emissions CISPR 11	Class A	Equipment is suitable for use in all establishments other than domestic and those directly connected to the public low-voltage power supply network that supplies building used for domestic purposes. NOTE The EMISSIONS characteristics of this equipment make it suitable for use in industrial areas and hospitals (CISPR 11 class A). If it is used in a residential environment (for which CISPR 11 class B is normally required) this equipment might not offer adequate protection to radio-frequency communication services. The user might need to take mitigation measures, such as relocating or re-orienting the equipment.	
Harmonic emissions IEC 61000-3-2	Class A		
Voltage fluctuations/ flicker emissions IEC 61000-3-3	Conforms		

Guidance and manufacturer's declaration - Electromagnetic immunity			
The HexaLux™ examination light is intended for use in an electromagnetic environment specified below. The customer or the user of HexaLux™ examination light should assure that it is used in such environment.			
Immunity test	**IEC 60601-test level**	**Compliance level**	**Electromagnetic environment – guidance**
Electrostatic discharge (ESD) IEC 61000-4-2	±8 kV contact ±15 kV air	±8 kV contact ±15 kV air	Professional healthcare facility environment Floors should be wood, concrete or ceramic tile. If floors are covered with synthetic material, the relative humidity should be at least 30%.
Electrical fast transient/burst IEC 61000-4-4	±2 kV on mains ±1 kV on inlet / outlet	±2 kV ±1 kV	Professional healthcare facility environment Mains power quality should be that of a typical commercial or hospital environment
Surge IEC 61000-4-5	±1 kV line(s) to line(s) ±2 kV line(s) to earth	±1 kV ±2 kV	
Voltage dips, short interruptions and voltage variations on power supply input lines IEC 6100-4-11	<5 % UT (>95% dip in UT) for 0,5 cycle 40 % UT(60 % dip in UT) for 5 cycles 70 % UT (30 % dip in UT) for 25 cycles <5 % UT (>95 % dip in UT) for 5 sec	<5 % UT (>95% dip in UT) for 0,5 cycle 40 % UT(60 % dip in UT) for 5 cycles 70 % UT (30 % dip in UT) for 25 cycles <5 % UT (>95 % dip in UT) for 5 sec	Professional healthcare facility environment Mains power quality should be that of a typical commercial or hospital environment. If the user of HexaLux™ examination light requires continued operation during power mains interruptions, it is recommended that the HexaLux™ examination light be powered from an uninterruptible power supply or a battery.
Power frequency (50/60 Hz) magnetic field IEC 61000-4-8	30 A/m	30 A/m	Professional healthcare facility environment Power frequency magnetic fields should beat at levels characteristic of a typical location in a typical commercial or hospital environment.
RF Conducted IEC 61000-4-6	3V 150 kHz to 80 MHz 6V in ISM bands between 0,15 MHz and 80 MHz 80% MA at 1 kHz	3V 150 kHz to 80 MHz 6V in ISM bands between 0,15 MHz and 80 MHz 80% MA at 1 kHz	Professional healthcare facility environment
RF Radiated IEC 61000-4-3	3V/m 80 MHz to 2,7 GHz 80% MA at 1 kHz 9V/m 710 MHz, 745 MHz 780 MHz, 5240 MHz 5550 MHz, 5785 MHz 27V/m 385 MHz 28V/m 450 MHz, 810 MHz 870 MHz, 930 MHz 1720 MHz, 1845 MHz 1970 MHz, 2450 MHz	3V/m 80 MHz to 2,7 GHz 80% MA at 1 kHz 9V/m 710 MHz, 745 MHz 780 MHz, 5240 MHz 5550 MHz, 5785 MHz 27V/m 385 MHz 28V/m 450 MHz, 810 MHz 870 MHz, 930 MHz 1720 MHz, 1845 MHz 1970 MHz, 2450 MHz	Professional healthcare facility environment

STERIS®

CH REP STERIS GmbH
c/o BDO AG Längfeldweg 116A
CH-2504 Biel-Bienne
Switzerland

EC REP STERIS Ireland Limited
IDA Business and Technology Park
Tullamore, County Offaly
R35 X865 Ireland

UK REP STERIS Solutions Limited
Chancery House, Rayns Way
Watermead Business Park, Syston
Leicester
LE7 1PF
United Kingdom

STERIS Corporation
2720 Gunter Park Dr. East
Montgomery, AL 36109 • USA
334-277-6660/800-444-9009
www.steris.com

11064834 REV A HexaLux