Patient Positioning Instructions Quick Reference Guide

STERIS 4000- & 5000-Series General Surgical Tables



STERIS

Table of Contents

Important Information 3
Hand Control Information 4

General / Robotic / Bariatric Surgery

Gall Bladder and Abdominopelvic Procedures. 7
Rectal and Colorectal Procedures. 8
Robotic Procedures Steep Trendelenburg 9
Bariatric Gastric and Esophageal Procedures 10
Bariatric Steep Reverse Trendelenburg 11
Bariatric Steep Reverse Trendelenburg with Split Legs. 12
Bariatric Surgery Lithotomy / Nissen Fundoplication 13

Cardiac / Vascular Surgery

Cardiac and Thoracic Procedures 14
Endovascular Procedures 15
Femoral-Popliteal Bypass Procedures 16

Urology Surgery

Endo-urology 18
Cystoscopy 19
Kidney, Lateral Thoracic Procedures 20

Gynecology Surgery

Gynecology Procedures 21

Neurosurgery

Seated Neurosurgery 22
Lateral Neurosurgery 23
Supine (Frontal) Neurosurgery 24
Prone (Posterior Fossa) Neurosurgery 25
Prone Thoracic Neurosurgery 26
Kneeling Neurosurgery 27

Orthopedic Surgery

Shoulder Procedures 28
Total Hip Replacement 30
Orthopedic Extension 31
Total Knee Arthroscopy 32
Total Knee Replacement 33

Ophthalmic / ENT Surgery

Ophthalmic or ENT Procedures 34

STERIS Patient Positioning Guide

Important Information

The information contained in this document is for reference only to help one understand the basic principles of the setup of STERIS™ 4000- & 5000-Series Surgical Tables (henceforth referred to by their series # respectively) for various surgical procedures. It is important to realize that a patient's anatomical constraints may require deviations from what is shown.

Before positioning patients, review and fully understand the material content of all related Operating Manuals and Instructions For Use for the table and accessory or accessories. Surgical table operator manuals:

Surgical Tables	
Product Name	**Document No.**
5095	P056404-485
5085 SRT	P413724-247
5085	P413724-246
4095	P056404-443
4085	P150832-639

In all instances:

- Never exceed the overall rated load for the table or accessory (the lowest rating listed indicates the overall rated load).
- All 5095 Surgical Tables are rated to support:
  - **1200lb (544 kg)** patient support, including raise/lower (centered on the column)
  - **900lb (408kg)** full table articulation (centered on the column); includes rotation for 5085 SRT models
  - **600lb (272 kg)** full table articulation, including table top slide
- All 5085 SRT and 5085 Surgical Tables are rated to support:
  - **1200 lb. (544 kg)** patient support, including raise/lower (centered on the column)
  - **1000 lb. (454 kg)** full table articulation (centered on the column); includes rotation for 5085 SRT models
  - **600 lb. (272 kg)** full table articulation, including table top slide; includes rotation and transport as well for 5085 SRT models

Note: These weight claims apply to normal and reverse orientations.

- All 4095 Surgical Tables are rated to support:
  - **1,100 lb. (499 kg)** patient support, including raise/lower (centered on the column)*
  - **1,000 lb (454 kg)** full table articulation (centered on the column)*
  - **600 lbs (272 kg)** full table articulation, including slide in Normal Orientation, and slide ONLY toward the feet in Reverse Orientation
  - **575 lb. (261 kg)** full table articulation, including slide toward the head in Reverse Orientation

Note: Unless stated otherwise, these weight claims apply to normal and reverse orientations.

- Patient weight limitations for table accessories are listed in the STERIS Surgical Table Accessory Catalog.
- All 4085 Surgical Tables are rated to support:
  - **1,100 lb. (499 kg)** patient support, including raise/lower (centered on the column)
  - **1000 lb. (454 kg)** full table articulation (centered on the column)
  - **600 lb. (272 kg)** full table articulation, including table top slide

Note: These weight claims apply to normal and reverse orientations.

- Always provide proper patient restraints to adequately secure the patient to the table for the intended procedure or for a possible medical emergency.
- Never add additional accessories to the table to extend the table platform further from the column (unless you have consulted with STERIS). This may cause table instability.
- Always monitor the patient during the procedure to prevent possible patient injury.
- Always follow safe patient positioning practices.
- Never use a damaged or broken table accessory or one that can't be adequately secured to the table.

Fluoroscopic Imaging and X-Ray Tops:

The 4000- & 5000-Series tables were designed for maximum C-arm capability to facilitate the use of fluoroscopy during virtually any surgical procedure. The 18" (46 cm) longitudinal slide permits full body imaging length up to:

- Upper body: 43" (1092 mm), from the top of the head to the femoral artery, when the table is slid to the head on 4085, 4095, 5085 and 5095 models. 41.4" (1051 mm) on the 5085 SRT model.
- Lower body: 43" (1092 mm) (from the sternum to the toes) when the table is slid to the foot on 4085 & 4095 models. 39.5" (1002 mm) on the 5085, 5085 SRT, and 5095 models.

The 36" (91 cm) long Carbon Fiber Fluoro Extension and 9" (228 mm) long Urology Extension add imaging length, respectively. All anatomic references will depend on actual patient sizes.

If utilizing optional X-ray tops follow this procedure:

1. Before patient is in the room, remove table pads from each section
2. Apply X-ray tops to the appropriate table section
3. Replace pads securely

Orthopedic procedures:

The 4000- & 5000-Series tables have a wide range of accessories to facilitate orthopedic procedures, and to that end, we have developed a comprehensive Orthopedic Extension Set Up Guide (P150832-316) that details the set up for lower extremity procedures. Please reference this publication for more detailed information on patient positioning for orthopedic procedures.

ENSURE SAFE PATIENT POSITIONING PRACTICES ARE FOLLOWED AND ALL PRESSURE POINTS ARE PROTECTED.

Universal Hand Control 2.0

Capabilities You Know and Love:

The Universal Hand Control 2.0 features the same benefits and capabilities of the Universal Hand Control including, but not limited to:

- Power On/Off
- Smart Display
- Slide HEAD/FOOT
- Height UP/Dn
- Back UP/DN
- Leg UP/DN
- Trendelenburg/Reverse
- Tilt LEFT/RIGHT
- Flex/Reflex
- Kidney UP/DN
- Reverse Orientation
- Floor Lock
- Level

On top of these capabilities, please see the right side of the page to learn about the new features that take this hand control to the next level.

Compatible with all CMAX, 4000- & 5000-Series Tables

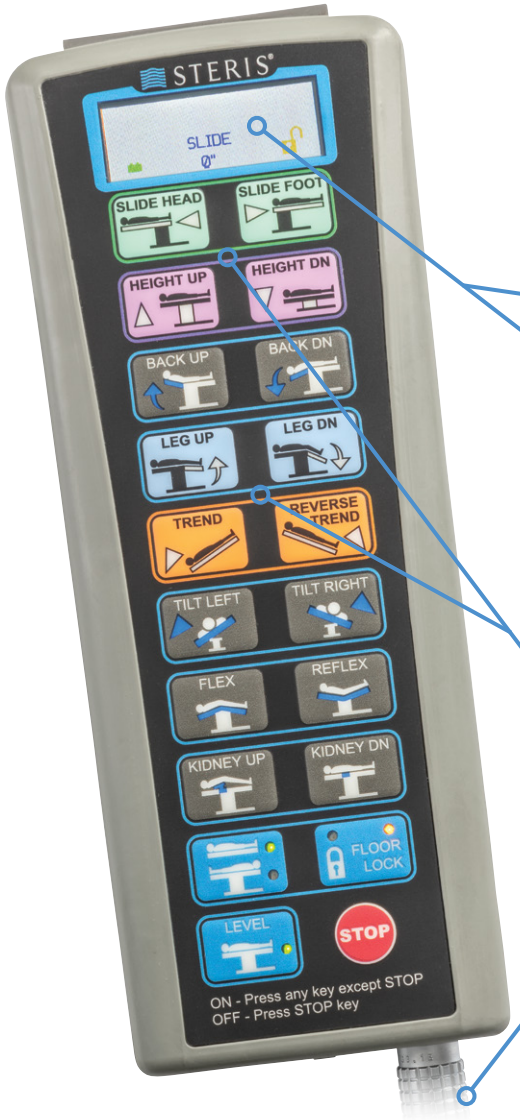

LCD:

Provides information on basic patient status and potential table section interference through the auto limit sensor function and service diagnostics

Backlit screen:

For clear viewing in darkened Operating Rooms

Auto-collision sensors:

Will stop sectional collisions and suggests an alternate articulation

Impact resistance:

With improved LCD Screen coverage and internal foam padding to resist damage from drops and being crushed

Colored buttons:

Offer quick and confident identification of the most frequently used functions

Detachable cord:

Offering quick connect and disconnect in case the cord is damaged during use

STERIS Universal Hand Control

Compatible with all CMAX, 4000- & 5000-Series Tables

Refer to surgical table operator manual for details on table operation using hand control.

Power On / Off:

The "STOP" button (power off) is located in the lower right hand corner of the hand control; ANY button turns the hand control on. Much like a laptop computer, the Universal Hand Control "sleeps" after ten hours of inactivity; any button (except "STOP") will re-activate it. For example, if you want to raise the table height during a procedure, press the "HEIGHT UP" button to turn the hand control back on, then press it again to achieve the desired height.

Smart display:

There is a small window at the top of the hand control that displays useful information. Indications for battery power, floor lock status and slide from center are provided. Service codes are also provided.

Slide:

The Universal Hand Control will slide 4000- or 5000-series table 18" (457 mm); 9" to the head and 9" to the foot end. When sliding from the head to the foot (or vice versa), it automatically pauses when the table is centered so you know when you've passed through the midpoint.

Tilt (left / right):

Up to 20° of lateral tilt in either direction is available.

Reverse Orientation:

This feature is used for a few accessories such as (but not limited to) the Shoulder Chair and 36" Fluoro Extension. To return to level, disable Reverse Orientation (press the button again) and then press "LEVEL".



Height:

A 4000-series table can be raised to 45" (1143 mm), or lowered to 26" (660 mm).

A 5000-series table can be raised to 42.5" (1080 mm), or lowered to 22.8" (581 mm).

Back (up / down):

The Back Section can be lowered 40° or raised to an 80° upright position.

Leg down:

The Leg Section can be lowered a full 105° or removed altogether.

Trendelenburg / Reverse:

Patients can be postured to 30° Trendelenburg and 30° Reverse Trendelenburg.

Kidney:

The motorized, radiolucent kidney bridge gives you up to 4" (102 mm) of additional lift for kidney procedures.

Floor Lock:

Press "FLOOR LOCK" and then press "LOCK" or "UNLOCK" to engage or disengage the floor locks.

Level:

The "LEVEL" button automatically returns the patient to level in an anatomically correct sequence of articulations. It also returns the table slide back to center following activation of slide mode. If the table is in Reverse Orientation, level will need to be achieved by section or by exiting Reverse Orientation mode.

ENSURE SAFE PATIENT POSITIONING PRACTICES ARE FOLLOWED AND ALL PRESSURE POINTS ARE PROTECTED.

STERIS 5085 SRT Advanced Hand Control Information

MEMORY (MEM):

The STERIS 5085 SRT/5085 advanced hand control has memory buttons that articulate the table for Beach Chair mode, as well as two other programmable memory buttons that can store the user's most frequently used clinical postures. The STERIS 5085 SRT/5085 advanced hand control also has the Transport and Rotation modes stored in memory as one-touch configurations (applicable for the STERIS 5085 SRT table only). An Exit Beach Chair mode also appears as a Memory option yet is only visible if the table is in Beach Chair mode.

Power On / Off:

The "STOP" button (power off) is located in the lower right hand corner of the hand control; ANY button (except "STOP") turns the hand control on. Much like a laptop computer, the STERIS 5085 SRT / 5085 advanced hand control "sleeps" after ten hours of inactivity; any button will re-activate it. For example, if you want to raise the table height during a procedure, press the "HEIGHT UP" button to turn the hand control back on, then press it again to achieve the desired height.

Easy-to-read LCD:

The large LCD window at the top of the hand control displays both graphics and text. For example, if you push the "HEIGHT UP" button, the window will display "UP" and show an icon of the table with the current height in inches at the top of the screen. As you continue to press the "HEIGHT UP" button, the table height range will change accordingly.

Move keys / Menu arrows:

The STERIS 5085 SRT/ 5085 advanced hand control features move keys (like modern cell phones) that allow the user to access menus of table articulation choices. The operator uses the left and right menu arrows to choose which table section to articulate and that section becomes highlighted in the icon in the display window. For example, to lower the Back Section, press a move key until the Back Section is highlighted in the window, and then press the right move key to lower the Back Section. The built-in Auto Limit Sensor will alert you if there is a sectional conflict, and will provide the corrective action in the window.



Floor Lock:

Press "FLOOR LOCK" and then press "LOCK" or "UNLOCK" to engage or disengage the floor locks. A helpful LED light indicates when the table's floor locks are engaged.

Trendelenburg / Reverse:

Patients can be postured to 30° Trendelenburg and 30° Reverse Trendelenburg.

Height:

The 5085 tables can be raised to 42.5" (1080 mm), or lowered to 22.8" (581 mm).

Tilt (left / right):

Up to 20° of lateral tilt in either direction; current table position is displayed on the top portion of the hand control.

Reverse Orientation:

This feature is used for a few accessories such as (but not limited to) the Shoulder Chair and 36" Fluoro Extension, and an LED indicator shows which orientation the table is in.

Level:

The "LEVEL" button automatically returns the patient to level in an anatomically correct sequence of articulations. It also returns the table slide back to center if the table had been slid. An LED indicator shows when the table has been leveled. Note: The return to level feature is available in Beach Chair mode. All other reverse orientation procedures require you to press "REVERSE" button again to return to Normal Orientation, then press "LEVEL".

Gall Bladder and Abdominopelvic Procedures

Position: Supine with Flexion
Table Orientation: Normal; (table slid to head)

Equipment:

- 1 set of X-ray Tops (optional) (BF219)
- 2 Anesthesia Armboards with pads that match the table mattress pad depth. 2" pads (BF803)
- 1 Foot Extension with Siderail Locks (BF2)
- 1 Restraint Strap (BF45), standard length (66 1/2")
- Anesthesia screen of choice: Universal Ether Screen (BF074) or Winged Ether Screen (BF075)

Set Up Procedure:

1. If X-ray Tops (not shown) are required for the procedure, see page 3 for instructions.
2. Apply padding, gel, and other pressure management and positioning devices per usual clinical practice and facility guidelines.
3. Carefully transfer patient onto surgical table per facility procedures in Normal Orientation and align waist (intercostals area) with the junction between the Back Section and the Seat Section of the table.
4. Secure the safety strap across the patient's thighs.
5. Secure armboard(s) onto siderails on both sides of the patient; verify proper attachment.
6. Place arms onto armboards and properly secure.
7. Slide table top all the way to the head end.
8. Place the Foot Extension onto the Leg Section of the table at the required length; ensure Siderail Locks are tightened.
9. Articulate the table using the flex button (Reverse Trendelenburg and back down maneuvers) to achieve appropriate positioning.
10. Apply anesthesia screen (not shown) and position as necessary.



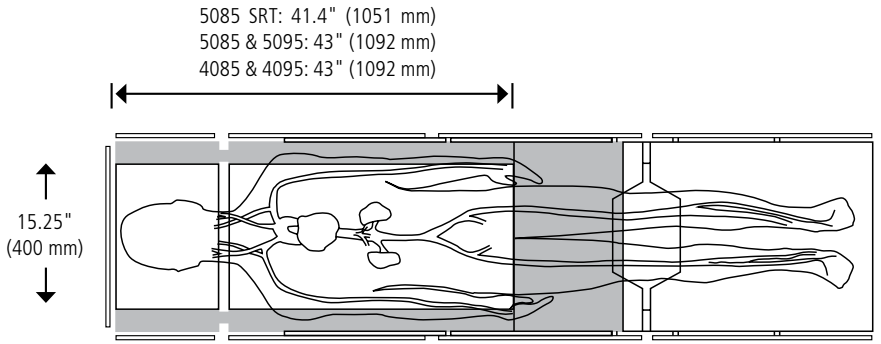

Note: Figure in illustration above is a 6'4" 180 lb. (193 cm, 82 kg) male
Note: White area depicts image access.
Note: Image provided for illustration and reference only.

ENSURE SAFE PATIENT POSITIONING PRACTICES ARE FOLLOWED AND ALL PRESSURE POINTS ARE PROTECTED.

Rectal / Colo-rectal Procedures

Position: Lithotomy with Trendelenburg
Table Orientation: Normal (table slid to foot)

Equipment:

- 1 TrenGuard Trendelenburg Patient Restraint Device (BF122)
- 450 Hybrid Procedure Pack (BF124) (shown in photo) or other procedure pack as needed
- 2 Lateral Stabilizing Pillows (BF125) (shown in photo)
- 2 Multi-axis Armboards RC (BF71239) (optional)
- 2 Rail Clamps (BF462)
- 1 Foot Control (BF586) (optional)
- 2 Legholders of choice with appropriate clamps

Legholder recommendations: Power-lift Stirrups, shown right (BF453), Bariatric Power-lift Stirrups (BF454), or Cysto-lift Knee Crutch (BF25)

Set Up Procedure:

1. Level tabletop and plug in optional Foot Control.
2. Remove or lower Head Section. Do not attach TrenGuard to the Head Section.
3. Install Rail Clamps symmetrically on right and left side of the table at approximate location of patient's neck with their perineum aligned with perineal edge of Seat Section.
4. Attach TrenGuard Patient Support Frame to the table.
   a. Install 2 DAS Slotted Rail Clamps to the side rails of the proximal Back Section of the table. Do not tighten at this time.
   b. Install TrenGuard Patient Support Frame to proximal Seat Section, inserting its mounting bars into the Slotted Rail Clamps. Do not tighten rail clamps at this time. Continue to leave them loose.
   c. Cover the TrenGuard Patient Support Frame with a pillow.
5. Carefully transfer patient onto surgical table per facility procedures so perineum is aligned with perineal edge of Seat Section of table.
6. Apply padding, gel, and other pressure management and positioning devices per usual clinical practice and facility guidelines.
7. From the TrenGuard Procedure Pack of choice, install the Neck Bolster (Speed Bump) foam pad to the TrenGuard Frame. Remove pillow from under patient head and support patient head and neck while installing pad.
8. Slide the entire TrenGuard Frame (with attached bolster pad and rail clamps) into position under the patients neck. Ensure the Neck Bolster is positioned under the cervical notch of the patient's neck. Tighten the 2 Slotted Rail Clamps to secure the TrenGuard system to the table top.
9. From the TrenGuard Procedure Pack of choice, install the Head Stabilizing foam pad. Place the patient's head into position and ensure patient ears are not touching the Head pad.
10. From the TrenGuard Procedure Pack of choice, install left and right side Lateral Stabilizing Pillows under the patient's shoulders. Ensure the shoulder pillows cover the metal TrenGuard Support Frame beneath.
11. Carefully tuck patient's arms at their sides ensuring fingers don't extend past the end of the seat section.
12. Install appropriate clamps for chosen Lithotomy Stirrups to siderails near right and left hips.
13. Place Lithotomy Stirrups into appropriate clamps at symmetrical locations beside the patient's hips.
14. Position legs into the lithotomy stirrups per clinical practice guidelines and facility policies. Typically 2 persons using slow, simultaneous movement of both legs during positioning of legs into the stirrups. Secure using stirrups straps.
15. Remove table's Leg Section.
16. Articulate the table to desired angle of Trendelenburg.
17. Adjust height and angle of legholders (follow operating instructions for legholders).
18. Slide tabletop all the way to the foot end for C-arm imaging.

Completion of Procedure

1. Return table to level position.
2. Reattach Leg Section.
3. Slowly and simultaneously, lower patient's legs on the table.
4. Remove legholders and clamps.



Robotic Procedures Steep Trendelenburg

Position: Lithotomy
Table Orientation: Normal; Steep Trendelenburg, full tabletop slide to foot; Leg Section removed

Equipment:

- TrenGuard™ Trendelenburg Patient Restraint (BF122)
- 2 DAS Slotted Rail Clamps (BF121)
- Classic Procedure Pack (BF123), or Hybrid Procedure Pack (BF124) with 2 Hybrid Reusable Stabilizing Pillows (BF134)
- 9" Urology Extension (BF578) optional
- Plug-In (Urology) Transfer Board (BF204)
- Standard Restraint Strap (BF45)
- 2 Lithotomy Stirrups of choice* with appropriate clamps
- *Power-lift Stirrups (BF453) shown
- *2 Clip-On Blade Clamps (BF15)

Lithotomy Stirrup recommendations:

STERIS offers Power-Lift Stirrups (BF453), Bariatric Power-Lift Stirrups (BF454), Junior Power-Lift Stirrups (BF855) or Pediatric Power-Lift Stirrups (BF854).

Set Up Procedure:

1. Remove Head Section (optional). Never install TrenGuard to the Head Section of the tabletop.
2. Attach TrenGuard Patient Support Frame to the table.
   a. Install 2 DAS Slotted Rail Clamps to the side rails of the proximal Back Section of the table. Do not tighten at this time.
   b. Install TrenGuard Patient Support Frame to proximal Seat Section, inserting its mounting bars into the Slotted Rail Clamps. Do not tighten rail clamps at this time. Continue to leave them loose.
   c. Cover the TrenGuard Patient Support Frame with a pillow.
3. Carefully transfer patient onto surgical table per facility procedures so perineum is aligned with perineal edge of Seat Section of table.
4. Apply padding, gel, and other pressure management and positioning devices per usual clinical practice and facility guidelines.
5. From the TrenGuard Procedure Pack of choice, install the Neck Bolster (Speed Bump) foam pad to the TrenGuard Frame. Remove pillow from under patient head and support patient head and neck while installing pad.
6. Slide the entire TrenGuard Frame (with attached bolster pad and rail clamps) into position under the patients neck. Ensure the Neck Bolster is positioned under the cervical notch of the patient's neck. Tighten the 2 Slotted Rail Clamps to secure the TrenGuard system to the table top.
7. From the TrenGuard Procedure Pack of choice, install the Head Stabilizing foam pad. Place the patient's head into position and ensure patient ears are not touching the Head pad.
8. From the TrenGuard Procedure Pack of choice, install left and right side Lateral Stabilizing Pillows under the patient's shoulders. Ensure the shoulder pillows cover the metal TrenGuard Support Frame beneath.
9. Carefully tuck patient's arms at their sides ensuring fingers don't extend past the end of the Seat Section.
10. Install appropriate clamps for chosen Lithotomy Stirrups to siderails near right and left hips.
11. Place Lithotomy Stirrups into appropriate clamps at symmetrical locations beside the patient's hips.
12. Position legs into the lithotomy stirrups per clinical practice guidelines and facility policies. Typically 2 persons using slow, simultaneous movement of both legs during positioning of legs into the stirrups.. Secure using stirrups straps.
13. Remove table's Leg Section (if still attached) or Plug-In Transfer Board (installed in Urology Extension).
14. Position stirrups such that the robot used for the procedure can adequately access the surgical site.
15. Attach and secure the standard safety strap across patient's mid-line and ensure arms are tucked in below the strap.
16. Additional safety straps or devices may be needed.
17. Slide tabletop completely to foot end.
18. Articulate the table using "REVERSE TREND" button and adjust Lithotomy Stirrups as needed.

Completion of Procedure:

1. Return table to level position.
2. Reattach Leg Section or Plug-In Transfer Board (to Urology Extension).
3. Slowly and simultaneously, remove patient's legs from Lithotomy Stirrups and lower onto table.
4. Remove Lithotomy Stirrups and clamps.



ENSURE SAFE PATIENT POSITIONING PRACTICES ARE FOLLOWED AND ALL PRESSURE POINTS ARE PROTECTED.

Bariatric Gastric/Esophageal

Position: Supine, split legs
Table Orientation: Normal (table slid to foot); Leg Section removed or reverse orientation

Equipment:

- 2 Multi-axis Armboards RC (BF71239)
- 1 Split Leg Positioner (BF351)
- 1 pair of Knee Restraint Straps (BF552)
- 1 pair of Clark Sockets (BF083) or Multi-Accessory Clamps (BF43)
- 2 Foot Rests (MTPA09 left; MTPA10 right)
- Bariatric Width Extenders (BF643 or BF644). BF643 supplied with 2" pads or BF644 supplied with 4" pads for use with or without X-ray tops.
- Anesthesia screen of choice: Universal Ether Screen (BF074) or Winged Ether Screen (BF075)

Legholder recommendations: Power-lift Stirrups (BF453), Bariatric Power-lift Stirrups (BF454), Split Leg Positioning Package (BF537), or Cysto-lift Knee Crutch (BF25)

Set Up Procedure:

1. Remove or lower Head Section (as needed to enhance anesthesia access).
2. Remove Leg Section. Note: the Auto Limit Sensor feature of the table will be disabled for the Leg Section once it is removed.
3. Attach Bariatric Width Extenders if needed.
4. Attach Split Leg Positioner to Seat Section of table (follow operating instructions); ensure secure attachment.
5. Apply padding, gel, and other pressure management and positioning devices per usual clinical practice and facility guidelines.
6. Carefully transfer patient onto surgical table per facility procedures so perineum is aligned with perineal edge of Seat Section of table.
7. Secure armboards onto siderails on both sides of the patient; verify proper attachment.
8. Place arms onto armboards and properly secure.
9. Place clamps at the appropriate location on the Split Leg Positioner to support patient's feet.
10. Insert Foot Rests into Clark Sockets or Multi-Accessory Clamps; ensure secure attachment.
11. Attach knee safety straps, being careful not to make them too tight or too loose on the patient.
12. Slide table top all the way to the foot end.
13. Once patient is anesthetized, articulate the table using "REVERSE TREND" button.
14. Apply anesthesia screen (not shown) and position as necessary.
15. Abduct Split Leg Positioners as needed for surgeon access to patient midline.



Bariatric Steep Reverse Trendelenburg

Position: Supine
Table Orientation: Normal; Steep Reverse Trendelenburg

Equipment:

- 2 Anesthesia Armboards with pads that match the table mattress pad depth. 2" pads (BF803)
- Bariatric Width Extenders (BF643 or BF644). BF643 supplied with 2" pads or BF644 supplied with 4" pads for use with or without X-ray tops.
- 1 Bariatric Foot Extension (BF542)
- 2 Side Rail Locks (BF133
- 1 Extra Long (126" / 3200 mm) Restraint Strap (BF451)
- Pads also available as 4"

Set Up Procedure:

1. Install Bariatric Width Extenders to the table; ensure secure attachment.
2. Apply padding, gel, and other pressure management and positioning devices per usual clinical practice and facility guidelines.
3. Carefully transfer patient onto surgical table per facility procedures.
4. Secure the safety strap across the patient's waist.
5. Secure armboards onto siderails on both sides of the patient; verify proper attachment.
6. Place arms onto armboards and properly secure.
7. Place the Bariatric Foot Extension onto the Leg Section of the table at the required length; ensure Siderail Locks are tightened.
8. Articulate the table using "REVERSE TREND" button.



ENSURE SAFE PATIENT POSITIONING PRACTICES ARE FOLLOWED AND ALL PRESSURE POINTS ARE PROTECTED.

Bariatric Steep Reverse Trendelenburg with Split Legs

Position: Supine
Table Orientation: Normal; Steep Reverse Trendelenburg, Leg Section removed, Split Legs installed

Equipment:

- Split-leg Positioners, pair (BF351)
- 2 Foot Rests (MTPA09 left; MTPA10 right)
- 2 Clark Sockets (BF083)
- Bariatric Nissen Thigh Straps, pair (BF15)
- Knee Restraint Straps, pair (BF552)
- 2 Anesthesia Armboards (BF803)
- Perineal Cutout Filler (BF205)
- Bariatric Width Extenders (BF643 or BF644). BF643 supplied with 2" pads or BF644 supplied with 4" pads for use with or without X-ray tops.

Set Up Procedure:

1. Remove or lower Head Section (as needed to enhance anesthesia access).
2. Remove Leg Section. Note: the Auto Limit Sensor feature of the table will be disabled for the Leg Section once it is removed. Split Legs will not be recognized by the Auto Limit Sensor feature.
3. Attach Bariatric Width Extenders if needed.
4. Attach Split Leg Positioners to Seat Section side rails (follow Split Leg Instructions for Use); ensure secure attachment. If using Bariatric Width Extenders, attach Split Leg Positioners at the Seat Section Width Extenders side rails.
5. Install a Perineal Cutout Filler over the perineal cutout of the table's Seat Section. Install under the table pad.
6. Apply padding, gel, and other pressure management and positioning devices per usual clinical practice and facility guidelines.
7. Carefully transfer patient onto surgical table per facility procedures so perineum is aligned with perineal edge of Seat Section of table.
8. Secure armboards onto siderails on both sides of the patient; verify proper attachment.
9. Place patient's arms onto armboards and properly secure.
10. Place Clark Sockets on each of the Split Leg Positioner's siderails, and position near patient's feet. Do not tighten.
11. Insert Left and Right Foot Rests into Clark Sockets; adjust to patient's feet, align, and tighten Clark Sockets to ensure secure attachment.
12. Attach Left and Right Knee Safety Straps over patient's lower thigh, knee and upper shin, adjust to secure patient while maintaining natural neutral alignment of the knee and not exerting undue constraints on the skin or joint. Safety Straps should be secured in a manner that holds knees in extended position.
13. Attach Bariatric Nissen Thigh Straps around the patient's upper thigh and groin, and secure to siderail on Seat Section side rails, being careful not to make them too tight or too loose on the patient.
14. Adjust Split Legs to desired abduction and articulate the tabletop using "REVERSE TREND" button.

Completion of Procedure:

1. Return table to level position.
2. Remove all straps on patient's legs.
3. Adjust Split Leg Positioners to fully Adducted position (patient legs together).
4. Remove Foot Rests and Clark Sockets.
5. Remove Armboards.



Bariatric Surgery Lithotomy / Nissen Fundoplication

Position: Low Lithotomy
Table Orientation: Normal (table slid to foot); Leg Section removed

Equipment:

- 2 Multi-axis Armboards RC (BF71239)
- Bariatric Width Extenders (BF643 or BF644). BF643 supplied with 2" pads or BF644 supplied with 4" pads for use with or without X-ray tops.
- 1 pair of Adult Nissen Thigh Straps (BF14) (Bariatric size: BF15)
- Anesthesia screen of choice: Universal Ether Screen (BF074) or Winged Ether Screen (BF075)
- 2 Legholders of choice with appropriate clamps

Legholder recommendations: Power-lift Stirrups (BF453), Bariatric Power-lift Stirrups (BF454), Split Leg Positioning Package (BF537), or Cysto-lift Knee Crutch (BF25)

Set Up Procedure:

1. Remove or lower Head Section (as needed to enhance anesthesia access).
2. Apply padding, gel, and other pressure management and positioning devices per usual clinical practice and facility guidelines.
3. Attach Bariatric Width Extenders if needed.
4. Carefully transfer patient onto surgical table per facility procedures so perineum is aligned with perineal edge of Seat Section of table. If additional leg support is required, there are three options to extend the length of the table:
   a. Place a 4085/5085 Head Section (BF73) at the foot end of the table
   b. Place a Foot Extension (BF2 or BF542 for Bariatric width) at the foot end of the table in a horizontal position
   c. Use a lightweight transfer board (BF588)
5. Secure armboards onto siderails on both sides of the patient; verify proper attachment.
6. Place arms onto armboards and properly secure.
7. Place legholders into appropriate clamps at symmetrical locations beside the patient's hips.
8. Slowly and simultaneously, raise patient's legs and place into legholders.
9. Remove table's Leg Section. Note: the Auto Limit Sensor feature of the table will be disabled for the Leg Section once it is removed.
10. Adjust height and angle of legholders (follow operating instructions for legholders).
11. Attach Nissen Thigh Straps to the table, being careful not to make them too tight or too loose on the patient.
12. Articulate the table using "REVERSE TREND" button and adjust legholders as needed.
13. Slide table top all the way to the foot end.
14. Apply anesthesia screen (not shown) and position as necessary.

Completion of Procedure:

1. Level the table using the "LEVEL" button.
2. Reattach Leg Section.
3. Slowly and simultaneously, lower patient's legs on the table.
4. Remove legholders and clamps.



ENSURE SAFE PATIENT POSITIONING PRACTICES ARE FOLLOWED AND ALL PRESSURE POINTS ARE PROTECTED.

Cardiac and Thoracic Procedures With Fluoroscopic Imaging

Position: Supine
Table Orientation: Normal; (table slid to head)

Equipment:

- 1 set of X-ray Tops (optional) (BF219)
- 2 Anesthesia Armboards with pads that match the table mattress pad depth. 2" pads (BF803)
- 1 Foot Extension with Siderail Locks (BF2)
- 1 Restraint Strap (BF45), standard length (66 1/2")

Set Up Procedure:

1. If X-ray Tops (not shown) are required for the procedure, see page 3 for instructions.
2. Apply padding, gel, and other pressure management and positioning devices per usual clinical practice and facility guidelines.
3. Carefully transfer patient onto surgical table per facility procedures.
4. Secure the safety strap across the patient's thighs.
5. Secure armboards (not shown) onto siderails on both sides of the patient; verify proper attachment.
6. Place arms onto armboards and properly secure.
7. Place the Foot Extension onto the Leg Section of the table at the required length; ensure Siderail Locks are tightened.
8. Slide table top all the way to the head end.

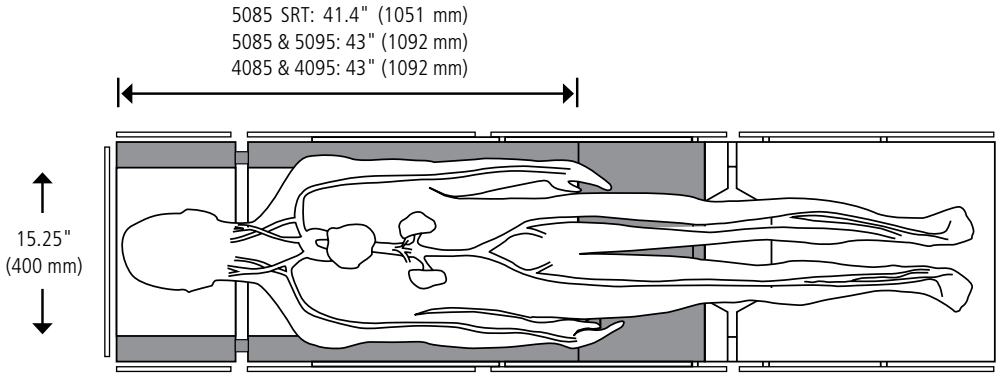

Note: Figure in illustration above is a 6'4" 180 lb. (193 cm, 82 kg) male.
Note: White area depicts image access.



Endovascular Procedures with Fluoroscopic Imaging

Position: Supine
Table Orientation: Reverse; (table slid to foot)

Equipment:

- 1 36" Carbon Fiber Fluoro Extension with 2" pad (BF642)
- 2 Standard Siderail Adaptors (TA00012)
- 2 Anesthesia Armboards with 2" pads (BF803)
- 1 Foot Extension with Siderail Locks (BF2)
- 1 Restraint Strap (BF45), standard length (66 1/2")

Set Up Procedure:

1. Press "REVERSE" button on bottom left of Hand Control. Note: The Auto Limit Sensor feature is disabled when in Reverse Orientation Mode.
2. Remove table's Leg Section. Note: the Auto Limit Sensor feature of the table will be disabled for the Leg Section once it is removed.
3. Attach 36" Carbon Fiber Fluoro Extension to Seat Section siderails; ensure secure attachment.
4. Position two Standard Siderail Adaptors on Carbon Fiber Fluoro Extension in approximate location of armboards if using Anesthesia Armboards.
5. Apply padding, gel, and other pressure management and positioning devices per usual clinical practice and facility guidelines.
6. Carefully transfer patient onto surgical table per facility procedures in Reverse Orientation and align head close to distal end of Carbon Fiber Fluoro Extension.
7. Secure the safety strap across the patient's thighs.
8. Secure armboards onto Siderail Adaptors on both sides of the patient; verify proper attachment.
9. Place arms onto armboards and properly secure.
10. Remove Head Section if desired.
11. Place the Foot Extension onto the Back Section of the table at the required length; ensure Siderail Locks are tightened.
12. Slide table top all the way to the foot end.

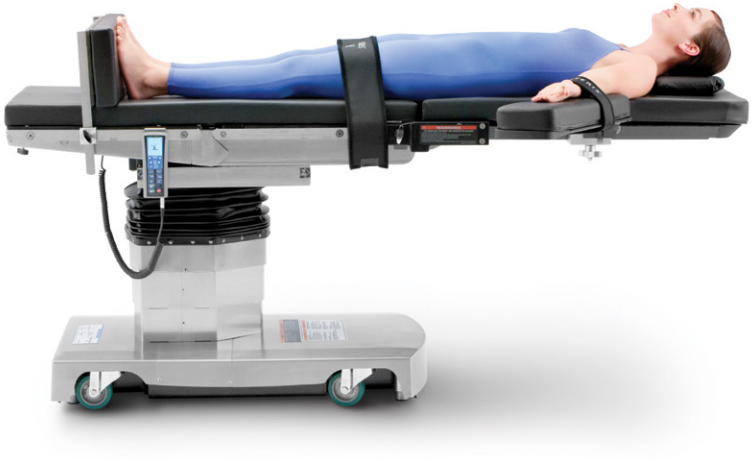

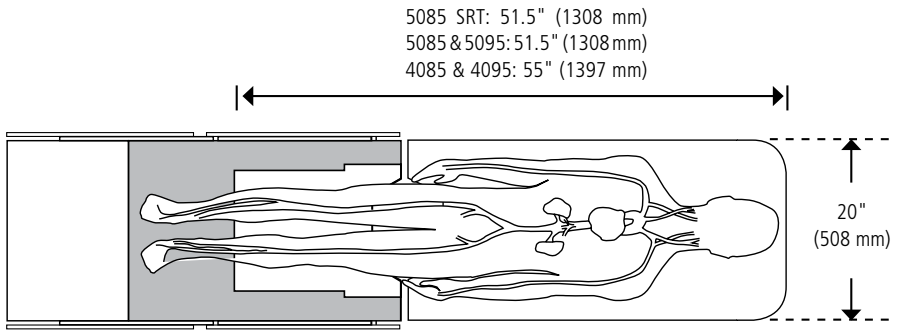

Note: Figure in illustration above is a 6' 4" 180 lb. (193 cm, 82 kg) male.
Note: White area depicts image access.

ENSURE SAFE PATIENT POSITIONING PRACTICES ARE FOLLOWED AND ALL PRESSURE POINTS ARE PROTECTED.

Femoral-Popliteal Bypass Procedures with Fluoroscopic Imaging

Position: Supine
Table Orientation: Normal with Head Section attached to Leg Section; (table slid to foot)

Equipment:

- 2 Anesthesia Armboards with pads that match the table mattress pad depth. 2" pads (BF803)
- 1 Foot Extension with Siderail Locks (BF2)
- 1 Restraint Strap (BF45), standard length (66 1/2")
- Anesthesia screen of choice: Universal Ether Screen (BF074) or Winged Ether Screen (BF075)

Set Up Procedure:

1. Remove Head Section and attach it to distal end of Leg Section to provide additional lower body imaging. Ensure secure attachment.
2. If using a Foot Extension to support the feet (as shown), place Siderail Locks on distal end of Head Section once it has been attached to Leg Section.
3. Apply padding, gel, and other pressure management and positioning devices per usual clinical practice and facility guidelines.
4. Carefully transfer patient onto surgical table per facility procedures and position according to patient height and surgeon preference.
5. Secure the safety strap across the patient's thighs.
6. Secure armboards onto siderails on both sides of the patient; verify proper attachment.
7. Place arms onto armboards and properly secure.
8. Place Foot Extension vertically into the Siderail Locks on distal end of table at the required length to support the feet (as shown). Ensure Siderail Locks are tightened.
9. Slide table top all the way to the foot end.
10. Attach anesthesia screen (Winged Ether Screen is shown) to Back Section and position as necessary.



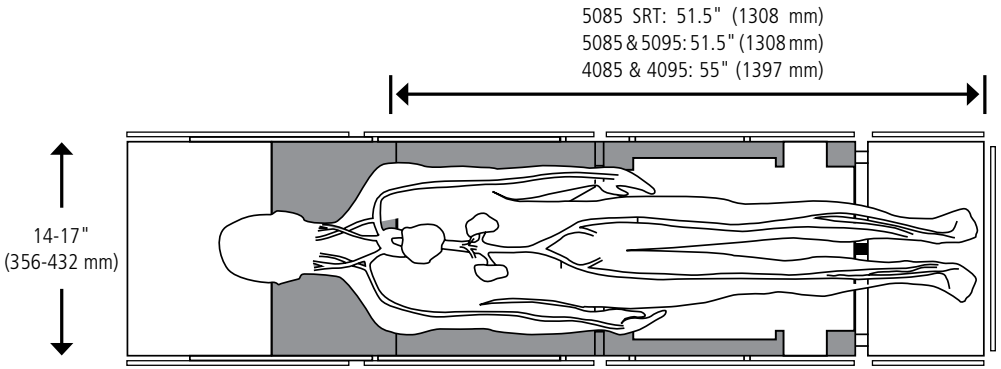

Note: Figure in illustration above is a 6' 4" 180 lb. (193 cm, 82 kg) male.
Note: White area depicts image access.

Alternate Option: Femoral-Popliteal Bypass Procedures with Fluoroscopic Imaging

Position: Supine
Table Orientation: Normal; (table slid to foot)

Equipment:

- 1 36" Carbon Fiber Fluoro Extension with 2" pad (BF642)
- 2 Anesthesia Armboards with pads that match the table mattress pad depth. 2" pads (BF803)
- Anesthesia screen of choice: Universal Ether Screen (BF074) or Winged Ether Screen (BF075)

Set Up Procedure:

1. Remove table's Head Section and Leg Section. Note: the Auto Limit Sensor feature of the table will be disabled for the Leg Section once it is removed.
2. Attach 36" Carbon Fiber Fluoro Extension to Seat Section siderails; ensure secure attachment.
3. Apply padding, gel, and other pressure management and positioning devices per usual clinical practice and facility guidelines.
4. Carefully transfer patient onto surgical table per facility procedures in Normal Orientation and align feet close to distal end of Carbon Fiber Fluoro Extension.
5. Secure armboards onto siderails on both sides of the patient; verify proper attachment.
6. Place arms onto armboards and properly secure.
7. Slide table top all the way to the foot end.
8. Apply anesthesia screen (not shown) to Back Section and position as necessary.



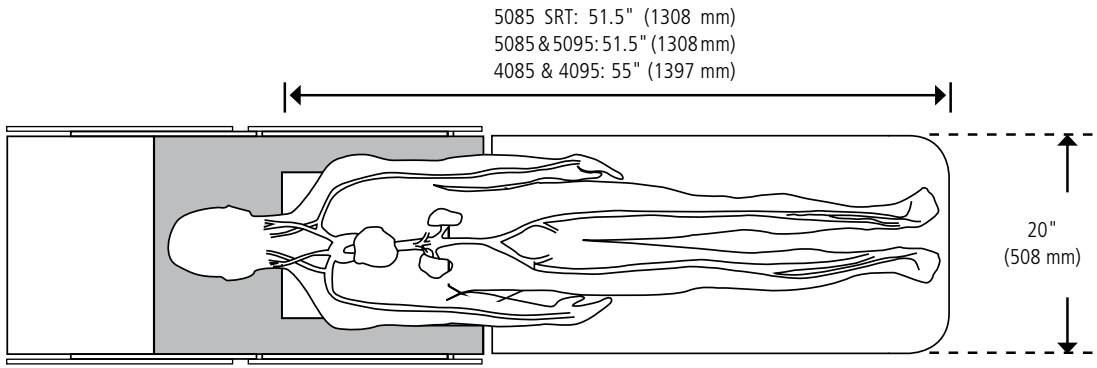

Note: Figure in illustration above is a 6' 4" 180 lb. (193 cm, 82 kg) male.
Note: White area depicts image access.

ENSURE SAFE PATIENT POSITIONING PRACTICES ARE FOLLOWED AND ALL PRESSURE POINTS ARE PROTECTED.

Endo-urology with Fluoroscopic Imaging

Position: High Lithotomy
Table Orientation: Normal (table slid to foot); Leg Section removed

Equipment:

- 2 Anesthesia Armboards with pads that match the table mattress pad depth. 2" pads (BF803)
- 1 9 Inch Urology Extension (BF578)
- 1 Fluid Collection System (BF457)
- 1 Fluid Collector Bag, Sterile (BF458)
- 1 Foot Control (BF586)
- 1 Patient Transfer Board with 2" pad (BF204)
- 2 Legholders of choice with appropriate clamps
- Anesthesia screen of choice: Universal Ether Screen (BF074) or Winged Ether Screen (BF075)

Legholder recommendations: Power-lift Stirrups (BF453) or Bariatric Power-lift Stirrups (BF454), or Cysto-lift Knee Crutch (BF25)

Set Up Procedure:

1. Plug in Foot Control.
2. Remove or lower Head Section (optional; to enhance anesthesia access).
3. Remove Leg Section. Note: the Auto Limit Sensor feature of the table will be disabled for the Leg Section once it is removed.
4. Attach Urology Extension to Seat Section siderails; ensure secure attachment.
5. Attach Fluid Collection System to end of Urology Extension siderails.
6. Place Patient Transfer Board onto end of Urology Extension; ensure secure attachment.
7. Apply padding, gel, and other pressure management and positioning devices per usual clinical practice and facility guidelines.
8. Carefully transfer patient onto surgical table per facility procedures in Normal Orientation so that perineum is aligned with the perineal edge of the Urology Extension.
9. Secure armboards onto siderails on both sides of the patient; verify proper attachment.
10. Place arms onto armboards and properly secure.
11. Place legholders into appropriate clamps at symmetrical locations beside the patient's hips.
12. Slowly and simultaneously, raise patient's legs and place into legholders.
13. Adjust height and angle of legholders (follow operating instructions for legholders).
14. Remove Patient Transfer Board.
15. Slide table top all the way to the foot end.
16. Apply anesthesia screen (not shown) and position as necessary.
17. Attach Fluid Collector Bag to Fluid Collection System.

Completion of Procedure:

1. Attach Patient Transfer Board.
2. Slowly and simultaneously, lower patient's legs onto the transfer board.
3. Remove legholders and clamps.



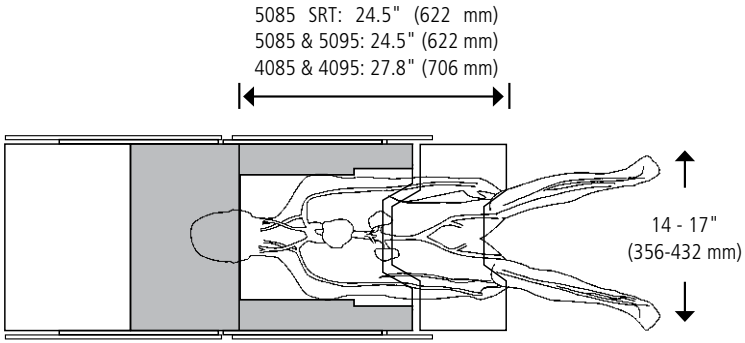

Note: White area depicts image access.

Cystoscopy

Position: High Lithotomy
Table Orientation: Normal (table slid to foot); Leg Section removed

Equipment:

- 2 Anesthesia Armboards with pads that match the table mattress pad depth. 2" pads (BF803)
- 1 Foot Control (BF586)
- 1 Fluid Collection System (BF457)
- 1 Fluid Collector Bag, Sterile (BF458)
- 2 Legholders of choice with appropriate clamps
- 2 Legholders of choice with appropriate clamps
- Anesthesia screen of choice: Universal Ether Screen (BF074) or Winged Ether Screen (BF075)

Legholder recommendations: Power-lift Stirrups (BF453) or Bariatric Power-lift Stirrups (BF454), or Cyso-lift Knee Crutch (BF25)

Set Up Procedure:

1. Plug in Foot Control.
2. Remove or lower Head Section (as needed to enhance anesthesia access). Head Section can be attached to distal end of Leg Section for taller patients if needed.
3. Apply padding, gel, and other pressure management and positioning devices per usual clinical practice and facility guidelines.
4. Carefully transfer patient onto surgical table per facility procedures so perineum is aligned with perineal edge of Seat Section. If additional leg support is required, there are two options to extend the length of the table:
   a. Place the Head Section at the foot end of the table (not allowed for SRT)
   b. Place a Foot Extension (BF2 or BF542 for Bariatric width) at the foot end of the table in a horizontal position
5. Secure armboards onto siderails on both sides of the patient; verify proper attachment.
6. Place arms onto armboards and properly secure.
7. Place legholders into appropriate clamps at symmetrical locations beside the patient's hips.
8. Slowly and simultaneously, raise patient's legs and place into legholders.
9. Remove table's Leg Section. Note: the Auto Limit Sensor feature of the table will be disabled for the Leg Section once it is removed.
10. Attach Fluid Collection System to Seat Section of table.
11. Attach Fluid Collection Bag to Fluid Collection System.
12. Adjust height and angle of legholders (follow operating instructions for legholders).
13. Slide table top all the way to the foot end.
14. Apply anesthesia screen (not shown) and position as necessary.

Completion of Procedure:

1. Reattach Leg Section.
2. Slowly and simultaneously, lower patient's legs onto the table.
3. Remove legholders and clamps.



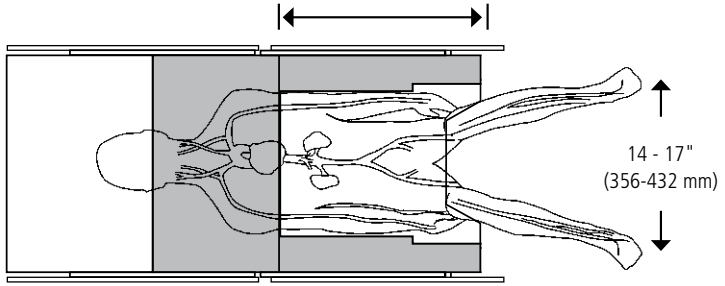

Note: White area depicts image access.

ENSURE SAFE PATIENT POSITIONING PRACTICES ARE FOLLOWED AND ALL PRESSURE POINTS ARE PROTECTED.

Kidney, Lateral Thoracic Procedures with Fluoroscopic Imaging

Position: Lateral with Kidney Elevation or Flexion
Table Orientation: Normal (table slid to head)

Equipment:

- 1 Anesthesia Armboard with 2" pad (BF803)
- 1 Multi-Posture Armboard with 2" pad (BF432)
- 1 ELITE Lateral Positioner (BF484)
- 1 ELITE Supine Headrest (BF466)
- 1 pair of Clark Sockets (BF083) or Multi-Accessory Clamps (BF43)
- 1 Restraint Strap (BF45), standard length (66 1/2")
- 1 Foot Extension with Siderail Locks (BF2)
- Anesthesia screen of choice: Universal Ether Screen (BF074) or Winged Ether Screen (BF075)

Legholder recommendations: Power-lift Stirrups (BF453) or Bariatric Power-lift Stirrups (BF454), or Cyso-lift Knee Crutch (BF25)

Set Up Procedure:

1. Install Lateral Positioner on the table; secure Velcro strap.
2. Place Supine Headrest on top of Lateral Positioner.
3. Apply padding, gel, and other pressure management and positioning devices per usual clinical practice and facility guidelines.
4. Carefully transfer patient onto surgical table per facility procedures so shoulder blades align with the groove in the Lateral Positioner.
5. Secure armboards onto siderails of the table on unaffected side of the patient; verify proper attachment (anesthesia armboard should align with the groove in the Lateral Positioner).
6. Once patient has been anesthetized, place patient in lateral position so that arm and shoulder of unaffected side fit into the groove in the Lateral Positioner.
7. Position the lower arm onto the Anesthesia Armboard and secure.
8. Position the upper arm onto the Multi-Posture Armboard and secure.
9. Slide table top all the way to the head end. (not shown)
10. Use the Flex command or use a combination of "REVERSE TREND" and Back down.
11. Flex patient's lower leg and place protective padding between patient's legs.
12. Raise the kidney elevator to the required height per surgeon instructions and/or flex the table to the appropriate position.
13. Place the safety strap across patient's thighs.
14. Place the Foot Extension onto the Leg Section of the table at the required length; ensure Siderail Locks are tightened.
15. Apply anesthesia screen (not shown) and position as necessary.



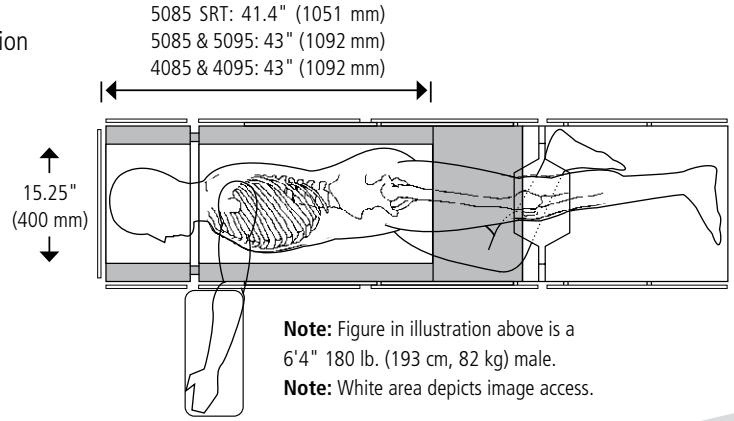

Note: Figure in illustration above is a 6'4" 180 lb. (193 cm, 82 kg) male.
Note: White area depicts image access.

Gynecology Procedures

Position: High Lithotomy
Table Orientation: Normal (table slid to foot)

Equipment:

- 2 Anesthesia Armboards with pads that match the table mattress pad depth. 2" pads (BF803)
- 1 Foot Control (BF586) (not shown)
- 2 Legholders of choice with appropriate clamps
- Anesthesia screen of choice: Universal Ether Screen (BF074) or Winged Ether Screen (BF075)

Legholder recommendations: Power-lift Stirrups (BF453) or Bariatric Power-lift Stirrups (BF454), or Cyso-lift Knee Crutch (BF25)

Set Up Procedure:

1. Plug in Foot Control.
2. Remove or lower Head Section (as needed to enhance anesthesia access).
3. Apply padding, gel, and other pressure management and positioning devices per usual clinical practice and facility guidelines.
4. Carefully transfer patient onto surgical table per facility procedures so perineum is aligned with perineal edge of Seat Section. If additional leg support is required, there are two options to extend the length of the table:
   a. Place the Head Section at the foot end of the table (not allowed for SRT)
   b. Place a Foot Extension (BF2 or BF542 for Bariatric width) at the foot end of the table in a horizontal position
5. Secure armboards onto siderails on both sides of the patient; verify proper attachment.
6. Place arms onto armboards and properly secure.
7. Place legholders into appropriate clamps at symmetrical locations beside the patient's hips.
8. Slowly and simultaneously, raise patient's legs and place into legholders.
9. Remove table's Leg Section. Note: the Auto Limit Sensor feature of the table will be disabled for the Leg Section once it is removed.
10. Adjust height and angle of legholders (follow operating instructions for legholders).
11. Slide table top all the way to the foot end.
12. Apply anesthesia screen (not shown) and position as necessary.

Completion of Procedure:

1. Reattach Leg Section.
2. Slowly and simultaneously, lower patient's legs on the table.
3. Remove legholders and clamps.



ENSURE SAFE PATIENT POSITIONING PRACTICES ARE FOLLOWED AND ALL PRESSURE POINTS ARE PROTECTED.

Seated Neurosurgery

Position: High Fowler's
Table Orientation: Normal; Head Section removed

Equipment:

- 1 Posterior Sitting Attachment #1801 (BF011)
- 1 Multi-Poise Headrest (BF038)
- 2 Multi-Posture Armboards with 2" pads (BF432)
- 1 pair of Clark Sockets (BF083) or Multi-Accessory Clamps (BF43)
- 1 Foot Extension with Siderail Locks (BF2)
- 1 Restraint Strap (BF45), standard length (66 1/2")

Legholder recommendations: Power-lift Stirrups (BF453) or Bariatric Power-lift Stirrups (BF454), or Cyso-lift Knee Crutch (BF25)

Set Up Procedure:

1. Apply padding, gel, and other pressure management and positioning devices per usual clinical practice and facility guidelines.
2. Carefully transfer patient onto surgical table per facility procedures and align shoulders with distal end of Back Section.
3. Once patient is anesthetized, lower Leg Section of the table so patient's legs are bent slightly.
4. Slowly raise Back Section so patient is in a seated position.
5. Secure the safety strap across the patient's thighs. (not shown)
6. Once patient is in the seated position, secure armboards onto Seat Section of the table on both sides of the patient; verify proper attachment.
7. Place arms onto armboards and properly secure.
8. Attach Posterior Sitting. Attachment to Back Section of the table at mid-sternum level.
9. Attach Multi-Poise Headrest to the Posterior Sitting Attachment and align steel knobs with patient's skull.
10. Secure patient's head to the Multi-Poise Headrest (follow headrest's operating instructions).
11. Remove Head Section of the table.
12. Place the Foot Extension onto the Leg Section of the table at the required length; ensure Siderail Locks are tightened.



Lateral Neurosurgery

Position: Lateral "park bench"
Table Orientation: Normal; Head Section removed

Equipment:

- 1 Eye-ENT-Neuro Headrest Adaptor (BF173 for 4085 and 5085 tables; BF309 for 5085 SRT tables)
- 1 Frontal Sitting Attachment #1802 (BF01)
- 1 Multi-Poise Headrest (BF038)
- 2 Multi-Posture Armboards with 2" pads (BF432)
- 2 Clark Sockets (BF083) or Multi-Accessory Clamps (BF43)
- 1 Foot Extension with Siderail Locks (BF2)
- 1 Restraint Strap (BF45), standard length (66 1/2")

Legholder recommendations: Power-lift Stirrups (BF453) or Bariatric Power-lift Stirrups (BF454), or Cyso-lift Knee Crutch (BF25)

Set Up Procedure:

1. Apply padding, gel, and other pressure management and positioning devices per usual clinical practice and facility guidelines.
2. Carefully transfer patient onto surgical table per facility procedures in Normal Orientation (supine) and align shoulders with distal end of Back Section.
3. Secure the safety strap across the patient's thighs.
4. Once patient is anesthetized, support patient's head and remove Head Section of the table.
5. Attach Eye-ENT-Neuro Headrest Adaptor to Back Section of table.
6. Attach Frontal Sitting Attachment to headrest adaptor.
7. Attach Multi-Poise Headrest to the Frontal Sitting Attachment and align with patient's skull.
8. Attach armboards onto Back Section of the table on both sides of the patient; one will need to be below the table and one will need to be above the table as shown in photo; verify proper attachment.
9. Remove safety strap and carefully roll patient into a lateral position.
10. Secure patient's head to the Multi-Poise Headrest (follow headrest's operating instructions).
11. Place arms onto armboards and properly secure.
12. Flex patient's lower leg and place protective padding (not shown) between patient's legs (such as BF478 AQUAGEL Leg Protector).
13. Secure the safety strap across the patient's thighs.
14. Place the Foot Extension onto the Leg Section of the table at the required length; ensure Siderail Locks are tightened.



ENSURE SAFE PATIENT POSITIONING PRACTICES ARE FOLLOWED AND ALL PRESSURE POINTS ARE PROTECTED.

Supine Neurosurgery (Cranial / Frontal Procedures)

Position: Supine
Table Orientation: Normal; Head Section removed

Equipment:

- 1 Eye-ENT-Neuro Headrest Adaptor (BF173 for 4085 and 5085 tables; BF309 for 5085 SRT tables)
- 1 Horizontal Attachment #1800 (BF008)
- 1 Multi-Poise Headrest (BF038)
- Anesthesia Armboards with pads that match the table mattress pad depth. 2" pads (BF803)
- 1 Foot Extension with Siderail Locks (BF2)
- 1 Restraint Strap (BF45), standard length (66 1/2")

Set Up Procedure:

1. Apply padding, gel, and other pressure management and positioning devices per usual clinical practice and facility guidelines.
2. Carefully transfer patient onto surgical table per facility procedures in Normal Orientation (supine) and align shoulders with distal end of Back Section.
3. Attach armboards onto Back Section of the table on both sides of the patient; verify proper attachment.
4. Place arms onto armboards and properly secure.
5. Secure the safety strap across the patient's thighs.
6. Once patient is anesthetized, support patient's head and remove Head Section of the table.
7. Attach Eye-ENT-Neuro Headrest Adaptor to Back Section of table.
8. Attach Horizontal Attachment to headrest adaptor.
9. Attach Multi-Poise Headrest to accommodate patient's head, and align with patient's skull.
10. Secure patient's head to the Multi-Poise Headrest (follow headrest's operating instructions).
11. Place Foot Extension onto the Leg Section of the table at required location; ensure siderail locks are tightened.



Prone Neurosurgery (Cranial / Posterior Fossa Procedures)

Position: Prone
Table Orientation: Normal; Head Section removed

Equipment:

- 1 Eye-ENT-Neuro Headrest Adaptor (BF173 for 4085 and 5085 tables; BF309 for 5085 SRT tables)
- 1 Horizontal Attachment #1800 (BF008)
- 1 Multi-Poise Headrest (BF038)
- Anesthesia Armboards with pads that match the table mattress pad depth. 2" pads (BF803)
- 1 ELITE Prone Headrest, not shown (BF464 or BF465)
- 1 ELITE Prone Positioner (BF485)
- 2 ELITE Flat-bottom Chest Rolls (BF483)
- 1 Restraint Strap (BF45), standard length (66 1/2")

Set Up Procedure:

1. Install ELITE Prone Positioner on table and secure Velcro straps.
2. Install ELITE Flat-bottom Chest Rolls at patient's armpit level and beneath patient's ankles as demonstrated in photo to help ensure proper spinal alignment.
3. Place Prone Headrest on Head Section of table.
4. Apply padding, gel, and other pressure management and positioning devices per usual clinical practice and facility guidelines.
5. Carefully transfer patient onto surgical table per facility procedures in prone position and place head in Prone Headrest.
6. Attach armboards onto Back Section of the table on both sides of the patient; verify proper attachment.
7. Place arms onto armboards and properly secure.
8. Secure the safety strap across the patient's thighs.
9. Remove Head Section of the table (and Prone Headrest), being careful that a staff member is supporting the patient's head.
10. Attach Eye-ENT-Neuro Headrest Adaptor to Back Section of the table.
11. Attach Horizontal Attachment to the Eye-ENT-Neuro Headrest Adaptor.
12. Attach Multi-Poise Headrest and adjust it to accommodate patient's head.
13. Secure patient's head to the Multi-Poise Headrest.



ENSURE SAFE PATIENT POSITIONING PRACTICES ARE FOLLOWED AND ALL PRESSURE POINTS ARE PROTECTED.

Prone Thoracic Spinal Neurosurgery

Position: Prone
Table Orientation: Normal

Equipment:

- 1 set of X-ray Tops (optional) (BF219)
- Anesthesia Armboards with pads that match the table mattress pad depth. 2" pads (BF803)
- 1 ELITE Prone Headrest (BF464 or BF465)
- 1 ELITE Prone Positioner (BF485)
- 2 ELITE Flat-bottom Chest Rolls (BF483)
- 1 Restraint Strap (BF45), standard length (66 1/2")

Set Up Procedure:

1. If X-ray Tops (not shown) are required for the procedure, see page 3 for instructions.
2. Install ELITE Prone Positioner on table and secure Velcro straps.
3. Install ELITE Flat-bottom Chest Rolls at armpit level and beneath patient's ankles as demonstrated in photo to help ensure proper spinal alignment.
4. Place Prone Headrest on Head Section of table.
5. Apply padding, gel, and other pressure management and positioning devices per usual clinical practice and facility guidelines.
6. Carefully transfer patient onto surgical table per facility procedures in prone position and place head in Prone Headrest.
7. Attach armboards onto siderails on both sides of the patient; verify proper attachment.
8. Place arms onto armboards and properly secure.
9. Secure the safety strap across the patient's thighs.
10. Slide the table all the way to the head end.

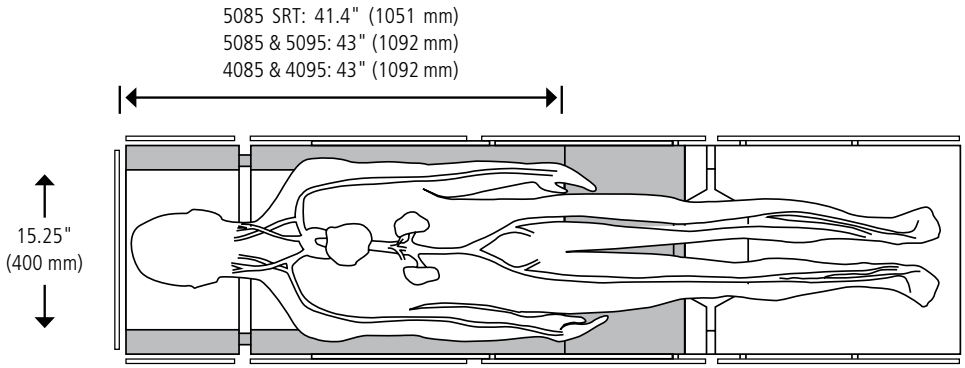

Note: Figure in illustration above is a 6'4" 180 lb. (193 cm, 82 kg) male.
Note: White area depicts image access.



Kneeling Neurosurgery (Orthospinal) with Fluoroscopic Imaging

Position: Prone kneeling
Table Orientation: Normal (table slid to foot); Head Section removed

Equipment:

- 2 Anesthesia Armboards with pads that match the table mattress pad depth. 2" pads (BF803)
- 1 Morgan Pelvic Rest (BF135)
- 2 Side Rail Locks (BF133)
- 2 Clark Sockets (BF083) or Multi-Accessory Clamps (BF43)
- 1 Foot Extension with Siderail Locks (BF2) for 5085 SRT tables
- 1 Restraint Strap (BF45), standard length (66 1/2")

Set Up Procedure:

1. Remove Head Section and attach to distal end of Leg Section to provide additional patient support. Ensure secure attachment.
2. Remove table back/Seat Section pad and replace with 4-inch (102-mm) thick pad with cutout.
3. Apply padding, gel, and other pressure management and positioning devices per usual clinical practice and facility guidelines.
4. Carefully transfer patient onto surgical table per facility procedures in prone position so patient's hips are aligned with the perineal edge of the Seat Section of the table.
5. Attach armboards onto Seat Section of the table on both sides of the patient; verify proper attachment.
6. Place arms onto armboards and properly secure.
7. Slide table top all the way to the foot end.
8. Lift patient's legs to 90° and remove the Head Section (or Foot Extension) from the table.
9. Using Siderail Locks, securely lock the Morgan Pelvic Rest kneeling surface beneath the patient's raised legs.
10. Lower the table's Leg Section to the clinically appropriate position. (If necessary, re-raise Leg Section and adjust patient and kneeling surface.)
11. Using Clark Sockets, securely lock the hip holders under the patient's iliac crest to stabilize.
12. Secure the safety strap across the patient's thighs.
13. Apply anesthesia screen (not shown) and position as necessary.



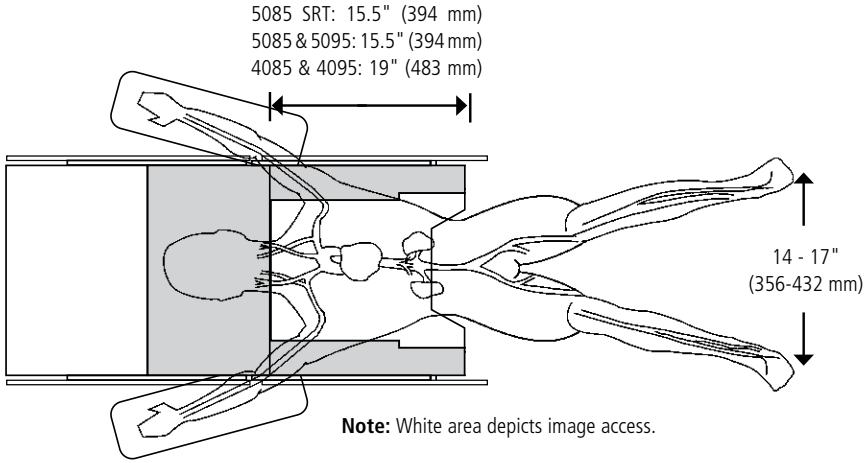

Note: White area depicts image access.

ENSURE SAFE PATIENT POSITIONING PRACTICES ARE FOLLOWED AND ALL PRESSURE POINTS ARE PROTECTED.

Shoulder Procedures

Applies to 4085, 4095, 5085 and 5095 tables using the Universal Hand Control or Universal Hand Control 2.0
Position: High Fowler's
Table Orientation: Reverse

Equipment:

- 1 Power-lift Beach Chair (BF590)
- 1 Head Restraint Strap (BF039)
- 1 Multi-Posture Armboard with 2" pad (BF432)
- 1 Clark Socket (BF083) or Multi-Accessory Clamp (BF43)
- 1 Foot Extension with Siderail Locks (BF2)
- 1 Restraint Strap (BF45), standard length (66 1/2")

Set Up Procedure:

1. Remove the Leg Section.
2. Insert the optional Perineal Filler Piece at the cutout for additional support.
3. Table should be centered, raised approximately 6" high, and rotated for reverse orientation positioning.
4. Attach Power-lift Beach Chair to Seat Section of table following operating instructions. Ensure secure attachment.
5. Lower Power-lift Beach Chair to horizontal (supine) position by pressing "LEG DN" key if in Normal Orientation or "BACK DN" key if in Reverse Orientation on the hand control.
6. Apply padding, gel, and other pressure management and positioning devices per usual clinical practice and facility guidelines.
7. Carefully transfer patient onto surgical table per facility procedures in reverse orientation and align buttocks with end of Seat Section. Once patient is anesthetized, secure patient's head with head safety strap; ensure that top ball joint knob behind patient's head and Head Section slide knob are loose (patient's head will be secured once patient is in seated position).
8. Tighten the flexion/extension knob. This knob is found beneath the head rest on the back side of the support rod that connects the Back Section to the head rest.
9. Secure the safety strap across the patient's thighs (not shown).
10. Place patient's hands in her/his lap.
11. Support and attend to the head and arms while the patient is being positioned.
12. Raise Power-lift Beach Chair by pressing the "LEG UP" key if the hand control is in Normal Orientation, or the "BACK UP" key if it is in Reverse Orientation.
13. Press the "FLEX" key if hand control is in Normal Orientation or use a combination of "TREND" and "LEG DN" if hand control is in Reverse Orientation.
14. Secure the patient's head with forehead and chin straps.
15. Adjust the lateral and tilt positioning of the head by means of the adjustment levers on the top and bottom of the headrest support bar and tighten all levers.
16. Position the patient's arms.
17. Remove the shoulder panel of the operative side.
18. Insert the lateral support brace.
19. Attach Foot Extension and any additional positioning aids as needed.

Note: Table can be articulated with the hand control in Normal or Reverse Orientation. In Reverse Orientation, Flex and Return to Level Functions are disabled.





Right shoulder panel removed for surgical site access

Shoulder Procedures

Applies to 5085 SRT tables using the Beach Chair Memory function
Position: High Fowler's
Table Orientation: Reverse

Equipment:

- 1 Power-lift Beach Chair (BF590)
- 1 Head Restraint Strap (BF039)
- 1 Multi-Posture Armboard with 2" pad (BF432)
- 1 Clark Socket (BF083) or Multi-Accessory Clamp (BF43)
- 1 Foot Extension with Siderail Locks (BF2)
- 1 Restraint Strap (BF45), standard length (66 1/2")

Set Up Procedure:

1. Remove the X-ray tops.
2. Remove the Leg Section.
3. Insert the optional Perineal Filler Piece at the cutout for additional support.
4. Press "REVERSE" key on lower left of hand control.
5. Table should be centered, raised approximately 6" high, and rotated for reverse orientation positioning.
6. Attach Power-lift Beach Chair to Seat Section of table following operating instructions. Ensure secure attachment.
7. Lower Power-lift Beach Chair to horizontal (supine) position pressing Back Down key.
8. Apply padding, gel, and other pressure management and positioning devices per usual clinical practice and facility guidelines.
9. Carefully transfer patient onto surgical table per facility procedures in reverse orientation and align buttocks with end of Seat Section. Once patient is anesthetized, secure patient's head with head safety strap; ensure that top ball joint knob behind patient's head and Head Section slide knob are loose (patient's head will be secured once patient is in seated position).
10. Tighten the flexion/extension knob. This knob is found beneath the head rest on the back side of the support rod that connects the Back Section to the head rest.
11. Secure the safety strap across the patient's thighs (not shown).
12. Place patient's hands in her/his lap.
13. Support and attend to the head and arms while the patient is being positioned.
14. Press the "MEM" button.
15. Press and scroll with either arrow key on the Menu touch panel until screen displays "Beach chair/Setup Beach Chair".
16. Press and hold the left dot under the Go command on the Move touch panel. Floor locks will engage and table will articulate into beach chair position.
17. The table defaults in to Reverse Orientation in Beach Chair mode.
18. If additional articulations are needed, press the right dot under the Exit command on the Move touch panel.
19. Pressing Exit does not remove the table from Beach Chair mode. An icon of a seated patient will appear on the left of the display screen identifying Beach Chair mode.
20. Secure the patient's head with forehead and chin straps.
21. Adjust the lateral and tilt positioning of the head by means of the adjustment levers on the top and bottom of the headrest support bar and tighten all levers.
22. Position the patient's arms.
23. Remove the shoulder panel of the operative side.
24. Insert the lateral support brace.
25. Attach Foot Extension and any additional positioning aides as needed.
26. At the conclusion of the case, Return to Level is enabled in Beach Chair mode despite being a Reverse Orientation position.
27. To remove Beach Chair mode, press the "MEM" button and scroll with either Menu arrow key until "Detach Beach Chair" appears in the screen. Press the left dot under the word Yes in the Menu panel. This step also converts the hand control back to Normal Orientation. Note: The Detach Beach Chair Memory option only appears while in Beach Chair mode.





Attach and lock Shoulder Chair to table.

ENSURE SAFE PATIENT POSITIONING PRACTICES ARE FOLLOWED AND ALL PRESSURE POINTS ARE PROTECTED.

Total Hip Replacement with Fluoroscopic Imaging

Position: Lateral with Flexion
Table Orientation: Normal (table slid to head)

Equipment:

- 1 Anesthesia Armboard with pad that matches the table mattress pad depth. 2" pad (BF803)
- 1 Multi-Posture Armboard with 2" pad (BF432)
- 1 ELITE Lateral Positioner (BF484)
- 1 ELITE Supine Headrest (BF466)
- 2 Clark Sockets (BF083) or Multi-Accessory Clamps (BF43)
- 1 Restraint Strap (BF45), standard length (66 1/2")
- 1 Foot Extension with Siderail Locks (BF2)
- Anesthesia screen of choice: Universal Ether Screen (BF074) or Winged Ether Screen (BF075)

Set Up Procedure:

1. Install Lateral Positioner on the table; secure Velcro strap.
2. Place Supine Headrest on top of Lateral Positioner.
3. Apply padding, gel, and other pressure management and positioning devices per usual clinical practice and facility guidelines.
4. Carefully transfer patient onto surgical table per facility procedures in Normal Orientation (supine) so that shoulder blades align with the groove in the Lateral Positioner.
5. Secure armboards onto siderails of the table on unaffected side of the patient; verify proper attachment (anesthesia armboard should align with the groove in the Lateral Positioner).
6. Once patient has been anesthetized, place patient in lateral position so that arm and shoulder of unaffected side fit into the groove in the Lateral Positioner.
7. Position the lower arm onto the Anesthesia Armboard and secure.
8. Position the upper arm onto the Multi-Posture Armboard and secure.
9. Place the safety strap across patient's unaffected thigh.
10. Place the Foot Extension onto the Leg Section of the table at the required length; ensure Siderail Locks are tightened.
11. Slide table top all the way to the head end.
12. Flex the table with a combination of "REVERSE TREND" and Back Down maneuvers to achieve proper patient positioning.
13. Apply anesthesia screen (not shown) and position as necessary.



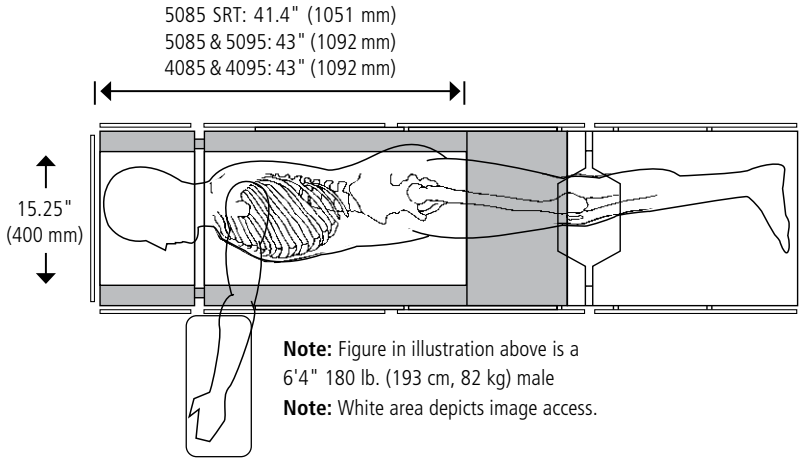

Note: Figure in illustration above is a 6'4" 180 lb. (193 cm, 82 kg) male
Note: White area depicts image access.

Orthopedic Extension

Position: Supine with Traction (Left Hip Pinning shown)
Table Orientation: Normal; Leg Section removed

Equipment:

- Orthopedic Accessory package (BF806)
- Other accessories as needed for each procedure (reference P150832-316 for a list of accessories)
- Optional: Surgical Drape Support (BF00018)
- Optional: Supplementary Accessory Package (BF808)

Set Up Procedure:

1. Remove X-ray tops (if previously installed) and remove Leg Section. Note: the Auto Limit Sensor feature of the table will be disabled for the Leg Section once it is removed.
2. Using hand control, lower leg receptacles all the way down.
3. Lower or remove Head Section (as needed to enhance anesthesia access).
4. Raise table just above edge of the orthopedic extension cart.
5. Bring Orthopedic Extension adjacent to perineal edge of the table.
6. Loosen each siderail locking knob of the Orthopedic Extension completely.
7. Using one person on either side of the table, each person should grab the siderail locking knob with one hand and the abductor bar with other.
8. Lift slightly and slide the mounting bracket onto the siderails until the gravity locks fall into place.
9. Firmly tighten the siderail locking knobs and remove the accessory cart from the operating area.
10. Place the Back/Seat Section pad in a reversed position to cover the perineal cutout area.
11. Follow the set-up instructions in the Orthopedic Extension set-up guide (P150832-316) to attach accessories. Carefully transfer patient onto surgical table per facility procedures and position the patient as directed.
12. The comprehensive Orthopedic Extension Set-Up Guide (P150832-316) contains the list of accessories that are needed for each specific orthopedic procedure, as well as detailed patient positioning instructions.

Completion of Procedure:

1. Once patient has been transferred off of the table and table/accessories have been cleaned and disinfected, raise the table all the way up.
2. Bring Orthopedic Extension accessory cart to the perineal edge of the table.
3. Lock the abductor bars so the inner bars (short sections) are rotated outward 90º and the outer bars (long sections) are perpendicular to the inner bars.
4. Using two people (one on either side of the table), loosen each siderail locking knobs.
5. Each person should then grab the siderail locking knob with one hand and the abductor bar with other, and holding the gravity locks up to clear the siderail standoffs, lift slightly and slide the Orthopedic Extension off of the table and onto the accessory cart and remove it from the surgical area.
6. Raise Leg Section receptacles and reattach Leg Section of table.



ENSURE SAFE PATIENT POSITIONING PRACTICES ARE FOLLOWED AND ALL PRESSURE POINTS ARE PROTECTED.

Total Knee Arthroscopy

Position: Supine
Table Orientation: Normal; Tabletop slid to foot; Leg Section removed or articulated down (-105 degrees); Head Section removal optional

Equipment:

- 2 Anesthesia Armboards with pads that match the table mattress pad depth. 2" pads (BF803)
- Deluxe Knee Arthroscopy System (BF12 & BF13)
- 1 Clip-On Socket Clamp (BF10), or Clark Socket (BF083)
- Universal Legholder (BF266 or BF267) or Split Leg Positioner (BF351)
- 1 Clip-On Socket Clamp (BF10), or Clark Socket (BF083)

Set Up Procedure:

1. Remove Head Section (optional).
2. Apply padding, gel, and other pressure management and positioning devices per usual clinical practice and facility guidelines.
3. Carefully transfer patient onto surgical table per facility procedures in Normal Orientation (supine) and align the patient's perineum with the perineal edge of the Seat Section. Ensure the operative knee is positioned such that it allows adequate articulation of the operative knee once the Leg Section is removed or articulated down. Typically, knee should be positioned to allow for the operative leg to free from Seat Section from mid to low thigh down.
4. Attach armboards onto Back Section of the table on both sides of the patient; verify proper attachment.
5. Place arms onto armboards and properly secure.
6. Install Clip-On Socket Clamp (BF10), or Clark Socket (BF083) onto the siderail of the patient's operative side, positioned near the operative knee on the distal end of the Seat Section.
7. Install Deluxe Knee Arthroscopy System into socket clamp on operative limb side of the table and properly secure.
8. Place the operative leg into the Deluxe Knee Arthroscopy System as follows. First, place the disposable leg holder pad around the distal thigh and secure using Velcro® fasteners. Second, place the operative leg with pad into the rigid system, adjust for leg size using the width adjustment tabs (2). Lastly, insert the ratchet strip into the ratchet block and tighten to secure operative leg.
9. Install Clip-On Socket Clamp (BF10), or Clark Socket (BF083), onto the siderail of the patient's non-operative side, near the distal Seat Section.
10. Install Universal Legholder into the socket clamp on the non-operative limb side of the table and properly secure.
11. Place the non-operative leg into the Universal Legholder, while adjusting the Legholder for neutral positioning and alignment of the non-operative limb, and secure in place.
12. Remove Leg Section, or lower Leg Section using table controls, and carefully lower operative leg into hanging position.
13. Inspect operative leg for potential pinch points around Knee Arthroscopy Holder. Adjust patient or system as needed.



Total Knee Replacement

Position: Supine
Table Orientation: Tabletop slid to foot; Head Section removed (optional)

Equipment:

- 2 Anesthesia Armboards with pads that match the table mattress pad depth. 2" pads (BF803)
- 1 TKR positioner of choice

TKR positioner recommendations:

STERIS offers the TKR Positioner (BF155 or BF156) and Disposable Sterile TKR Boot Liner (BF157). Alternatively, choose the Schure Loc XPS Limb Positioner (BF041) including Schure Loc TKR Positioner Attachment (BF168) and Disposable Sterile TKR Boot Liner (BF157).

Set Up Procedure:

1. Carefully transfer patient onto surgical table per facility procedures, and adjust patient so heels are aligned near the distal end of the Leg Section of the table.
2. Slide tabletop all the way to the foot end.
3. Remove Head Section (optional).
4. Apply padding, gel, and other pressure management and positioning devices per usual clinical practice and facility guidelines.
5. Attach armboards onto the siderails of the table on both sides of the patient just below the shoulder; verify proper attachment.
6. Place arms onto armboards and properly secure.
7. Attach total knee replacement positioning device of choice (e.g., Schure Loc XPS Limb Positioner depicted above) on operative limb side of the table and properly secure.
8. Articulate the TKR positioner in order to achieve proper alignment of the patient's leg & foot in the TKR boot. Positioning of the TKR device may vary slightly based on the size of the patient. Adjust as needed.
9. Place disposable boot liner into TKR positioner's boot.
10. Place patient foot into TKR positioner and secure using sterile wrap (not included).
11. Adjust TKR positioner to achieve patient knee positioning per surgeon preference.



ENSURE SAFE PATIENT POSITIONING PRACTICES ARE FOLLOWED AND ALL PRESSURE POINTS ARE PROTECTED.

Ophthalmic or ENT Procedures

Position: Supine
Table Orientation: Normal; (table slid to head)

Equipment:

- 1 Foot Control (BF586)
- 1 Narrow Headrest (BF592) with Wrist Rest (BF593) optional
- 1 Eye-ENT-Neuro Headrest Adaptor (BF173 for 4085 and 5085 tables; BF309 for 5085 SRT tables) optional
- 2 Anesthesia Armboards with pads that match the table mattress pad depth. 2" pads (BF803)
- 1 Foot Extension with Siderail Locks (BF2)
- 1 Restraint Strap (BF45), standard length (66 1/2")

Set Up Procedure:

1. Plug in Foot Control.
2. Remove head section (not shown).
3. Attach Eye-ENT-Neuro Headrest Adaptor to back section; ensure secure attachment (not shown).
4. Attach Narrow Head Rest to Eye-ENT-Neuro Headrest Adaptor; ensure secure attachment (not shown).
5. Apply padding, gel, and other pressure management and positioning devices per usual clinical practice and facility guidelines.
6. Carefully transfer patient onto surgical table per facility procedures and position head in head rest.
7. Secure the safety strap across the patient's thighs.
8. Secure armboards onto siderails on both sides of the patient; verify proper attachment.
9. Place arms onto armboards and properly secure.
10. Place the Foot Extension onto the leg section of the table at the required length; ensure Siderail Locks are tightened.
11. Articulate table to position patient according to procedure or surgeon preference.
12. Slide table top all the way to the head end.



Document # P150832-738EN-CA Rev. A, B/P 01-25-24
©2024 STERIS
All rights reserved.

STERIS

T : 800-661-3937
F : 877-585-2279
E : Canada_Resource@steris.com