STERIS®

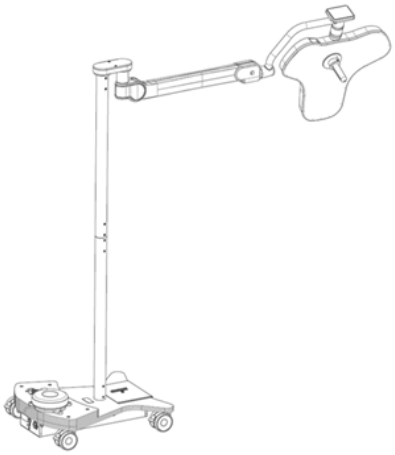

ALYON™ Surgical Lighting System Mobile Stand

Operator Manual

en
11062956
Revision A

© 2025 STERIS. All rights reserved.

Published: 2025-7-14

TABLE OF CONTENTS

Section Number		Description	Page
1	**A Word from STERIS**		**1**
1.1	Copyright Information		1
1.2	Introduction		1
1.3	Intended Use		1
1.4	Advisory		1
1.5	Certifications		2
1.6	Service Information		2
1.7	Addresses		2
2	**Safety Precautions**		**3**
2.1	Summary of Warnings and Cautions		3
2.2	Waste Products Disposal		14
2.3	REACH Information		14
3	**Symbols and Labels**		**15**
3.1	Symbols		15
4	**Specifications and Requirements**		**18**
4.1	Characteristics		18
4.2	Environmental Conditions		18
4.3	Lighthead Optical Performance		19
4.4	Camera Performance		20
5	**Component Identification**		**22**
5.1	Component Identification		22
5.2	Operator Controls		23
6	**Operating Instructions**		**25**
6.1	Getting Started		25
6.2	Positioning the Light		25
6.3	Using the Light Handle		27
6.4	Using the Touchscreen		34
6.5	Using the Video Camera		39
7	**Routine Maintenance and Inspection**		**43**
7.1	Scheduled Maintenance		43
7.2	Preventative Maintenance		44
8	**Troubleshooting**		**46**
8.1	Introduction		46
8.2	LED Module Does Not Turn On		46
8.3	Light Does Not Turn On		47
8.4	Light Flickers When Moved		47
8.5	Light Pattern Does Not Change		47
8.6	Lighthead Drifts Once Set in Position and Released		47
8.7	Poor Light Pattern		48
9	**Appendix**		**49**
9.1	EMC Compliance		49

A Word from STERIS

1.1 Copyright Information

ALYON Mobile Stand is a trademark of STERIS or its affiliates. All other company or product names referenced in this document are trademarks of their respective owners.

© 2025 STERIS Corporation. All rights reserved.

This publication is protected by copyright. Copying, disclosure to others, or the use of this publication is prohibited without the express written consent of STERIS.

STERIS reserves the right to make changes in the specifications shown herein without notice or obligation. For additional information, contact STERIS.

1.2 Introduction

This manual contains information about the operation and routine maintenance of the ALYON Mobile Stand. All personnel involved in the operation or routine maintenance of the ALYON Mobile Stand should carefully review and comply with the warnings, cautions, and instructions in this manual. The manual is intended to protect the health and safety of such personnel and should therefore be made easily accessible for reference.

1.3 Intended Use

The mobile stand is a fixed or variable pattern, variable intensity surgical lighting fixture designed to provide visible illumination of the surgical field or the patient for the operating room staff.

1.4 Advisory

The following is an important message from STERIS about the advantages and limitations associated with the use of high intensity surgical lighting systems.

Because of the variety of surgical procedures performed and the wide range of individual preferences of surgical staffs, it is desirable that a surgical lighting system be capable of selective control across a wide range of illumination intensities. The Illuminating Engineering Society (IES) stresses that in addition to providing control of intensity, surgical lighting systems should provide shadow control, correct color rendition, and a suitable depth of field to provide sharp, consistent lighting into deep body cavities. As illumination levels increase, however, radiant heat also increases. Therefore, the IES cautions that for most operations, radiant heat should be kept to a minimum. The user of surgical lights should utilize the lowest possible illumination level suitable for the procedure, especially in certain neurological or intestinal procedures on delicate, thin, dry or abnormal tissue. Furthermore, for the protection of surgically exposed tissues and for the comfort and efficiency of the surgeon and assistants, radiant energy can be effectively controlled by limiting the time of exposure at higher illumination levels. Extra care must be taken when the light fields from multiple lightheads are overlapped on the surgical site, since this condition creates a risk of too much heat.

An international standard for the safety of surgical lights established by the International Electrotechnical Commission (IEC) sets minimum and maximum levels of illumination and maximum levels of radiant heat that can be emitted from a single surgical luminaire. The system has been designed to comply with this international standard and to provide a wide range of illumination levels while minimizing the potentially damaging infrared heat in the surgical field.

The illumination level of surgical lights can be adjusted through several intensity settings via conveniently located controls on either the touchscreen or the lighthead handle. The illumination level also decreases as the pattern size increases. Maximum illuminance can reach 160 klx for the smallest pattern size of the lighthead and can be adjusted by intensity control or pattern size control throughout the entire range specified by the IEC.

Serious incidents that have occurred in relation to this medical device should be reported to the manufacturer and competent authority in the country where the incident occurred.

1.5 Certifications

The STERIS quality system holds the following certification:

ISO 13485*

For the design, manufacture, sale, installation, and after-sales service of operating tables, tabletops, transfer trolleys, and their extensions and accessories, lighting systems, washers and disinfection units.

The ALYON mobile stand has been designed in compliance with international medical electrical equipment regulations:

- IEC 60601-2-41 (EN 60601-2-41) Particular requirements for the basic safety and essential performance of surgical luminaires
- IEC 60601-1 (EN 60601-1) General requirements for basic safety and essential performance applicable to medical electrical equipment
- IEC 60601-1-2 (EN 60601-1-2) electromagnetic compatibility

1.6 Service Information

This manual contains schedules and instructions for a thorough preventative maintenance program. Comprehensive instructions for non-routine maintenance are located in the maintenance manual. Preventative maintenance is essential to the safe and proper operation of the product. Customers are encouraged to contact STERIS about our comprehensive maintenance program. Under the terms of the program, preventive maintenance, adjustments, and the replacement of worn parts are performed on a scheduled basis to help ensure optimal performance and minimize untimely or costly interruptions. STERIS maintains a worldwide staff of well-equipped, factory-trained technicians to provide these services, as well as on-site installation, training, and expert repair services. Only STERIS-trained personnel should perform non-routine maintenance. For additional information, contact STERIS.

1.7 Addresses

CE

EC REP

STERIS Ireland Limited
IDA Business and Technology Park
Tullamore
County Offaly

R35 X865 ■ Ireland

CH REP

STERIS GmbH
c/o BDO AG Längfeldweg 116A
CH-2504 Biel-Bienne
Switzerland

STERIS Corporation
2720 Gunter Park East
Montgomery, AL 36109 ▪ USA
334-277-6660/800-444-9009
www.steris.com

UK REP

STERIS Solutions Limited
Chancery House, Rayns Way
Watermead Business Park, Syston
Leicester
LE7 1PF
United Kingdom

Class 1 Equipment

Ordinary Equipment (enclosed equipment without protection from ingress of water)

Equipment not suitable for use in the presence of a flammable anesthetic mixture with air or oxygen or nitrous oxide.

Suitable for continuous operation.

The base language of this document is ENGLISH. Any translations must be made from the base language document.

Safety Precautions

2.1 Summary of Warnings and Cautions

Following is a list of the safety precautions which must be observed when servicing an ALYON surgical lighting system mobile stand. WARNINGS indicate the potential for danger to personnel, and CAUTIONS indicate the potential for damage to equipment. These precautions are repeated (in whole or in part), where applicable, throughout the manual. It is important to review these precautions before servicing the lighting system.

WARNING

PERSONAL INJURY AND/OR EQUIPMENT DAMAGE HAZARD

⚠ Safe and reliable operation of this equipment requires regularly scheduled preventive maintenance, in addition to the regular performance of routine maintenance. Contact STERIS Service Engineering to schedule preventive maintenance.

⚠ Repairs and adjustments to this equipment should be made only by fully qualified service personnel. Maintenance performed by inexperienced, unqualified personnel or installation of unauthorized parts could cause personal injury, invalidate the warranty or result in costly equipment damage. Contact STERIS Service regarding service options.

⚠ Do not attempt to clean lighthead unless power is turned off and the lighthead has cooled sufficiently.

⚠ No part of this system shall be serviced while in use with a patient.

⚠ Lighthead arm uses adjustable tension force to support lighthead weight. Do not remove lighthead from the arm unless the arm has been locked in place by a trained and authorized technician.

⚠ Do not modify this equipment without authorization of the manufacturer.

⚠ If this equipment is modified, appropriate inspection and testing must be conducted to ensure continued safe use of operation.

⚠ Use of this equipment adjacent to other equipment should be avoided due to risk of improper operation of the powered device. Observe equipment used adjacent to this equipment for proper operation prior to use.

⚠ Portable RF communications equipment, including peripherals such as antenna cables and external antennas, should be used no closer than 12" (305 mm) to any part of the surgical lighting system, including cables specified by STERIS. Degradation of equipment performance could result.

⚠ Use of accessories, transducers, and cables other than those specified, with the exception of transducers and cables sold by the manufacturer of this device as replacement parts for internal components, may result in increased EMISSIONS or decreased IMMUNITY of the system. Accessories or replacement parts not listed in the Operator or Maintenance Manuals should not be used.

⚠ Avoid potential EMISSIONS interference. The system should not be used adjacent to or stacked with other equipment. If adjacent or stacked use is necessary, the equipment or system should be observed to verify normal operation in the configuration in which it will be used.

⚠ Accessories or replacement parts not listed in the Operator Manual or Maintenance Manual should not be used as it may affect EMC or result in equipment damage.

⚠ Medical Electrical Equipment needs special precautions regarding EMC and needs to be installed and put into service according to the EMC information provided in this manual.

Avoid risk of the product dropping. The overall system and the product are an adapted system with regard to the maximum load bearing capacity and maximum loading capacity (payload). Alterations to the product can result in exceeding the permissible, total or maximum loading capacity of individual components. In this case, there is a risk of the product or components thereof disengaging from the fastening product and dropping.

⚠
- No structural alterations are made to the product. Unauthorized modifications or conversions to the product are not permitted for safety reasons.
- Only genuine spare parts or accessories and those specified and approved by STERIS are used. The use of other parts may involve unknown risks and must be avoided in all cases.
- Inspections and maintenance are carried out at the specified time intervals.

⚠ Portable RF communications equipment (including peripherals such as antenna cables and external antennas) should be used no closer than 30 cm (12”) to any part of the ALYON Surgical Lighting System Mobile Stand, including cables specified by the manufacturer. Otherwise, degradation of the performance of this equipment could result.

⚠ A risk of increased emissions or decreased immunity may result if any additional cables are attached.

⚠ This device has not been tested for compatibility with all other potential RF Emitters such as X-ray, Metal Detectors, Electrosurgical Equipment, Diathermy Equipment, 5G Cellular, NFC, WPT, or Electronic Article Surveillance (EAS) devices. Caution should be used if such emitters are present within the use environment.

⚠ Use of this equipment adjacent to or stacked with other equipment should be avoided because it could result in improper operation. If such use is necessary, this equipment and the other equipment should be observed to verify that they are operating normally.

⚠ Use of accessories, transducers, and cables other than those specified or provided by the manufacturer of this equipment could result in increased electromagnetic emissions or decreased electromagnetic immunity of this equipment and result in improper operation.

⚠ Do not use the lighting system in an oxygen-rich environment.

⚠ The user should check that the light is working properly and that it is in good condition before using it. Check that there is no visible damage to the components, as damage to parts may cause small particles to fall into the sterile environment around the patient.

⚠ If the light is not stable in position, the braking force must be adjusted by trained personnel.

⚠ Unless otherwise specified in this user manual, the light is not intended to be combined with products from other manufacturers and no compatibility testing has been performed by STERIS. Any user who intends to combine this product with third-party products assumes responsibility for this combination. Combined use with third-party products may void the warranty of STERIS products.

⚠ Before starting any surgical procedures, ensure that the light is stable and the brakes are locked.

WARNING

PERSONAL INJURY HAZARD

⚠ This product emits possibly hazardous optical radiation. Do not stare at the light emitted from the surgical luminaire. Eye injury may occur. The eyes of patients must be either closed or protected during procedures.

⚠ Light is an energy that can potentially damage tissue with overexposure. Adapt the lighting level to the needs of the procedure, especially when multiple light sources are used.

⚠ Failure to engage the disposable light handle cover completely may result in cover falling from lighthead during the procedure.

⚠ Cables or accessories other than those supplied by STERIS may affect EMC performance.

⚠ The mobile light should only be used in the operating room when there is a functional ceiling-mounted surgical lighting system that can be switched on in the event of failure of the mobile light.

⚠ During specific surgical procedures, ensure that automatic ambient lighting mode is activated before turning off the surgical room light.

WARNING

STERILITY ASSURANCE HAZARD

⚠ Do not use the surgeon's control buttons when the plastic light handle is being used unless a sterile cover is installed. If the plastic light handle is used without a disposable cover, the sterility of the surgical environment may be compromised.

⚠ Do not use disposable handle covers if the packaging has been damaged, torn or opened, as the sterility of the cover may be compromised.

⚠ Sterile personnel shall not interact with the camera (if used) unless a disposable sterile cover is installed.

⚠ Before using a sterile disposable cover, verify the expiration date of this device on its package.

⚠ Before using a sterile disposable cover, ensure that this device has been provided by STERIS and/or has been declared by STERIS to be compatible with the light system.

⚠ Failure to fit the sterile disposal cover fully on the handle may cause the sterile disposable cover to fall off during the surgical procedure.

⚠ Ensure that the handle adapter and handle are properly fitted and locked before starting the surgical procedure to avoid any risk of them falling off during the surgical procedure.

WARNING

BIOHAZARD

⚠ Sterile disposable covers for handle are intended for single use only.

⚠ Reusable sterilizable covers must be properly cleaned and sterilized between uses.

⚠ Universal precautions must be observed when disposing of any single use disposable item.

WARNING

DISPOSAL HAZARD

⚠ This product contains materials which may require disposal through appropriately licensed and permitted hazardous waste management firms. The materials listed in this manual are contained within the system. When disposing of the lighting fixture or its parts, ensure proper disposal of hazardous and other regulated waste in compliance with national, state and local WEEE/RoHs regulations.

WARNING

EXPLOSION HAZARD

⚠ Do not use this lighting system in the presence of flammable anesthetics.

WARNING

ELECTRIC SHOCK HAZARD

⚠ Unplug the light before servicing. Do not connect the light unless all utilities have been properly locked out. Always follow OSHA Lockout-Tagout and electrical safety-related work practice standards.

⚠ Do not remove covers or perform service other than as described in this manual. Refer servicing to qualified service personnel.

⚠ Do not cut and abandon the alternating current (AC) wiring leads, as this is an electrical hazard.

⚠ To avoid risk of electric shock, this equipment must only be connected to a supply mains with protective ground. If there is no protective ground in the operating room, use battery supply.

⚠ Only use the power cord provided by STERIS.

Power supply cables are laid inside the product. Contact with energized components presents a danger to life from electric shock. Disconnect the product from the mains before any adjustment work:

⚠
- Disconnect all the poles from the mains and prevent the product from being switched back on again.
- Verify all the devices connected are de-energized.

⚠ Electric shock caused by defective insulation. Damaged insulation can energize the product.

⚠ Damaged external cables can energize the system with a voltage of 230 V (120 V), presenting a danger to life from electric shock. Do not damage cable insulation.

To prevent the risk of electric shock, the product may only be connected to a supply network equipped with a protective conductor.

⚠
- The product must be connected in such a way that it can be disconnected from the mains at all poles and at the same time.

Power supply cables are laid inside the product. Contact with energized components presents a danger to life from electric shock. Prior to any installation/dismantling and setting up work, the product must be disconnected from the mains.

⚠
- Disconnect all the poles from the mains and prevent the product from being switched back on again.
- Check whether the monitor is de-energized.

⚠ In the event of damage to supply cables, the entire system may be energized. Contact with energized components presents a danger to life from electric shock. Do not damage the cable insulation.

In the event of damage to supply cables, the entire system will be energized. Contact with energized components presents a danger to life from electric shock.

⚠
- Prior to performing any installation and adjustment work, disconnect the product from the mains at all poles and prevent it from being switched back on again.
- Verify supply cables are laid in a way to prevent twisting.
- Do not damage the cable insulation.

⚠ If the grounding cables are damaged, the overall system can be energized in the case of a system fault. Contact with energized components presents a danger to life from electric shock.

⚠ In line with IEC 60601-1, no BF or CF applied parts can be connected directly to the surgical light.

⚠ Do not insert any object into the openings of the device.

⚠ The OFF position of the local light control turns off control to the camera and lighthead, but the mobile stand is still energized. This mode is referred to as standby. It is necessary to press the touch screen to ensure that the system is powered or not and ready to be used.

⚠ Position the mobile stand so that the power cord can be easily disconnected. Unplugging the power cord is the best way to isolate the light from the mains power supply.

⚠ If there is any sign of damage to the power cable or plug, do not connect the power supply. Immediately contact STERIS.

⚠ To avoid electrostatic discharge complications, do not touch parts of light and the patient at the same time.

⚠ Use potential equalization conductors to overcome differing potentials across networks. When the potential equalization conductor allows an electromedical system, the system must meet the requirements of IEC 60601–1.

WARNING

PINCHING HAZARD

⚠ Pinch points are created during extreme articulation of the suspension system. Do not place hands on or near the suspension knuckle during lighthead articulations.

WARNING

TRIPPING HAZARD

⚠ Route the power cord to the receptacle in a position so it will not be tripped over by personnel in the area.

⚠ Disconnect the power cord before moving the light. Ensure the path is free of obstacles when moving the light.

⚠ Do not step on the mobile base or place objects on the mobile base.

CAUTION

POSSIBLE EQUIPMENT DAMAGE

If the packaging has been damaged or unintentionally opened before use or if the packaging has been exposed to environmental conditions outside those specified, notify STERIS immediately. In the event of damaged or missing components, send STERIS a report with the following information:

⚠

- Inventory of damage and defects
- Serial number of the system or damaged components
- Order number
- Name and address
- Consignee

⚠ Appropriate components of this lighting system have been tested and found in compliance with IEC 60601-1-2:2014/AMD1:2020 , Medical Electrical Equipment – Part 1: General Requirements for Safety; Electromagnetic Compatibility (EMC). There is, however, a potential for electromagnetic or other interference between this equipment and other devices. Should you experience interference, relocate this device or minimize the use of the affected equipment while this device is in operation.

⚠ Use of accessories, transducers and cables other than those specified, with the exception of transducers and cables sold by the manufacturer of the EQUIPMENT or SYSTEM as replacement parts for internal components, may result in increased emissions or decreased immunity of the system.

⚠ Accessories or replacement parts not listed in the Operator or Maintenance Manuals should not be used adjacent to or stacked with the system. If adjacent or stacked use is necessary, the equipment or system should be observed to verify normal operation in the configuration in which it will be used.

⚠ Accessories or replacement parts not listed in the Operator or Maintenance Manuals should not be used as it may affect EMC or result in equipment damage.

⚠ Medical Electrical Equipment needs special precautions regarding EMC and needs to be installed and put into service according to the EMC information provided in this manual.

⚠ When installing or removing the video camera, be careful to place it in a secure location to prevent it from rolling, dropping and breaking. Also, to avoid scratching the lens surface, do not stand camera up with lens side facing down.

⚠ Use of any disinfectant solution OTHER than those listed here may cause discoloration or deformation on the lens surface:

- Coverage® Plus Germicidal Surface Wipes Disinfecting/Deodorizing/Cleaning Wipes
- Quaternary Ammonium Compound (Quats) with Ethanol solvent
- Quaternary Ammonium Compound (Quats) with Isopropyl Alcohol (IPA) solvent
- Quaternary Ammonium Compound (Quats) with IPA + 2-Butoxyethanol solvent
- Quaternary Ammonium Compound (Quats) + Biguanide
- H2O2 (Hydrogen Peroxide)
- Neutral Cleaners

⚠ The use of H2O2 + PAA (Hydrogen Peroxide + Peracetic Acid) is strongly discouraged for use on all STERIS products.

⚠ Always follow manufacturer instructions for concentrations and use of cleaning products.

⚠ Prevent leakage of fluids into interior of lighthead. Ensure no excess fluids remain on lighthead during and after cleaning. Any such leakage could impair or damage the lighting system.

⚠ Cleaning and disinfecting agents used on this lighting system must be certified by their manufacturer to be compatible with the following materials: polycarbonate, polyetherimide, santoprene.

⚠ DO NOT SPRAY any cleaning product directly onto the lighthead or any system components. For system components, dampen a clean, soft cloth with the cleaning solution and wring out the excess moisture.

⚠ Do not use floor cleaners on this equipment.

⚠ Do not scratch the lens when cleaning; always wear rubber gloves and use only a clean, white, lint-free cloth when wiping external surfaces.

⚠ Do not attempt to replace LED modules on the lighthead. Refer servicing to qualified service personnel.

⚠ Avoid discoloration of control center display. Do not clean control center with povidone-iodine solutions or allow such solutions to contact display surfaces.

⚠ Do not bump lighthead into walls or other equipment.

⚠ Do not attempt to replace LED modules on the lighthead. Refer servicing to qualified service personnel.

⚠ Do not use unsuitable objects or excessive force to press the touchscreen controls.

NOTE: The emissions characteristics of this equipment make it suitable for use in industrial areas and hospitals (CISPR 11 Class A). If it is used in a residential environment (for which CISPR 11 Class B is required), this equipment might not offer adequate protection to radio frequency communication services. The user might need to take mitigation measures, such as relocating or re-orientating the equipment.

2.2 Waste Products Disposal



Waste of electrical and electronic equipment must not be disposed as unsorted municipal waste. It must be collected separately and must be disposed as per local regulations. Contact your authorized representative for information concerning the decommissioning of your equipment.

WARNING

DISPOSAL HAZARD:



This product contains materials which may require disposal through appropriately licensed and permitted hazardous waste management firms. The materials listed in this manual are contained within the system. When disposing of the lighting fixture or its parts, ensure proper disposal of hazardous and other regulated waste in compliance with national, state, and local WEEE/RoHs regulations.

Electronic and Electrical Parts–not known to require special disposal methods at date of this manual.

Metal Parts–made from aluminum (Al), steel (Fe), cast iron (Fe), copper (Cu), and copper alloys (Cu/x), plastic, synthetic rubber, plating (Cr, Ni, Zn, Au), and adhesives not known to require special disposal methods at date of this manual.

2.3 REACH Information

As a product supplier, STERIS is under obligation to provide information if a substance of very high concern (SVHC) is present in a product at a concentration of more than 0.1% weight by weight (w/w), in accordance with Article 33 of the REACH regulation. According to current information provided by our suppliers, the following SVHC are present in one or more components of our products in concentrations exceeding 0.1% weight by weight:

- Diazene-1,2-dicarboxamide (C,C'-azodi(formamide) (ADCA), CAS No. 123-77-3
- Tris (nonphenyl) phosphite (TNPP), CAS No. 26523-78-4
- Lead, CAS No. 7439-92-1
- Cadmium, CAS No 7440-43-9

These substances are present in components that do not come into direct or indirect contact with users or patients.

Symbols and Labels

3.1 Symbols

The following symbols may appear on the system.

Refer to the STERIS Symbol Glossary for definitions at *https://www.steris.com/symbol-glossary*.

Table 3-1. Symbol Definitions

Symbol	Definition
	Standby
	Settings Control. Press button to access System Menu for system configuration or information
	Lighthead (Designation and Intensity) Symbol Definitions
	Camera Control
	Do not operate system unless optical fiber cables are fully connected
	Caution, Indicates Control Fault. Refer situation to qualified, trained service technician.
	Increase Intensity (Surgeon's Control Buttons)[1]
	Decrease Intensity (Surgeon's Control Buttons)[1]
	Pinch Point Label
	Hazardous Voltage
	Direct Current
	Alternating Current
	Protective Earth (Ground)
	Equipotentiality

1. *Symbol is a fingertip "contour" molded into the handle. or yoke.*

Table 3-1. Symbol Definitions (continued)

Symbol	Definition
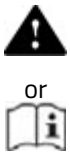	Attention, consult manual for further instructions
	Consult instructions before use
	Potential Impact Hazard
	Maximum Load Hazard (maximum load limit given on label)
SN	Serial Number of Unit
REF	Equipment or Reorder Number
LOT	Batch Code
	Symbol Indicating the Legal Manufacturer Name and Address
	Symbol Indicating the Date of Manufacture (YYYY-MM-DD)
	Date and Place of Manufacture
V~	Voltage Rating of Unit, Alternating Current
A	Amperage Rating of Unit, Alternating Current
Hz	Frequency Rating of Unit, Alternating Current
MD	Medical Device
UDI	Unique Device Identifier
	CE Mark with Notified Body Reference Number
	CE Marking; Conformity to European Notified Body Reference
EC REP	Authorized Representative in the European Community
UK CA	UKCA Marked (UK Conformity Assessed)
UK REP	UK Authorized Representative
CH REP	Swiss Authorized Representative

Table 3-1. Symbol Definitions (continued)

Symbol	Definition
	Maximum Weight
	This Way Up
	Keep Dry
	Fragile, Handle with Care
	Handle with Care
	Do Not Stack
	3R Laser (Video Only)
	Storage Humidity Range
	Atmospheric Pressure
	Temperature Limit
	Single Use
	Do Not Use If Packaging Damaged
	Keep From Sunlight
	Use By Date
	Product Is Not Made With Natural Rubber Latex
STERILE EO	Sterilized Using Ethylene Oxide
	Single Sterile Barrier System
	Single Sterile Barrier System with Protective Packaging Outside
	WEEE Directive: Product Must Be Recycled

Specifications and Requirements

4.1 Characteristics

Mains	100 to 240 VAC 50 to 60 Hz 275 VA Max
Protection	Class I
Fuses	Mains Input: T2, 5A, 5x20mm, 250V, BC1500A Batteries: T6.3A, 6.3x32mm, 250V, BC1500A
Batteries	2x12V 17Ah lead sealed
Standalone Operation	Minimum 3 hours
Charge/Discharge Indicator	Indicators on the base (LEDs)
Use	Continuous

4.2 Environmental Conditions

Table 4-1. Operating Conditions

Temperature	10°C to 40°C / 50°F to 104°F
Relative Humidity	10 to 75%
Barometric Pressure	800 hPa to 1060 hPa

Table 4-2. Transportation and Storage Conditions

Temperature	0°C to 65°C / 0°F to 149°F
Relative Humidity	10 to 85% non-condensing
Barometric Pressure	500 hPa to 1060 hPa

4.3 Lighthead Optical Performance

Table 4-3. Lighthead Optical Performance

Feature	Lighthead
Light Field Safety Information, Level 10, at D_{MI}*	
Central Illuminance $E_{C, MI}$ (+/-10%), Small Pattern	160,000 Lux
Maximum Total Irradiance E_{Total} (+/-10%) at $E_{C, MI}$	540 W/m2
Light Field Performance Information, Level 10, at DREF*	
Central Illuminance $E_{C, REF}$ (+/-10%), Small Pattern	140,000 Lux
Color Temperature (+/6%)	4500K
Color Rendering Index Ra (+/-6 %)**	98
Color Rendering Index R_9 (+/-10%)**	97
D_{50} Light Field Diameter at 50% $E_{C, REF}$ (+/-10%)	Small Pattern: 10.5 cm Large Pattern: 14.9 cm
D_{10} Light Field Diameter at 10% $E_{C, REF}$ (+/-10%)	Small Pattern: 17 cm Large pattern: 28 cm
Ratio D_{50} / D_{10}	Small pattern: 0.62 Large pattern: 0.53
Depth of Illumination (L1 + L2 at 60% $E_{C, REF}$) (+/-6%)	75 cm
Depth of Illumination (L1 + L2 at 20% $E_{C, REF}$) (+/-6%)	130 cm
Shadow Dilution with 1 mask (+/-10%), Small Pattern	58%
Shadow Dilution with 1 mask (+/-10%), Large Pattern	58%
Shadow Dilution with 2 masks (+/-10%), Small Pattern	55%
Shadow Dilution with 2 masks (+/-10%), Large Pattern	55%
Shadow Dilution with Simulated Cavity (+/-10%), Small Pattern	90%
Shadow Dilution with Simulated Cavity (+/-10%), Large Pattern	88%

Table 4-3. Lighthead Optical Performance (continued)

Feature	Lighthead
Shadow Dilution with Simulated Cavity and 1 Mask (+/-10%), Small Pattern	45%
Shadow Dilution with Simulated Cavity and 1 Mask (+/-10%), Large Pattern	45%
Shadow Dilution with Simulated Cavity and 2 Masks (+/-10%), Small Pattern	50%
Shadow Dilution with Simulated Cavity and 2 Masks (+/-10%), Large Pattern	45%
Life Span (L70 up to 30% Loss of Illumination)	60,000 hrs
* D_{MI}=0.89m, D_{REF}=1m	
** Maximum 100	

4.4 Camera Performance

Table 4-4. Wireless Camera Features

Number of Effective Pixels	Up to 8,294,499 (4K, 3820x2160)
Video Signal	4K, 2160p/30
Optical Zoom	20x
Digital Zoom	12x
Recommended Lighting Levels	100 to 100,000 lux
Signal/Noise Ratio	50dB
Focus	Automatic/Manual
White Balance	Automatic/Manual
Brightness	Automatic/Manual
Gamma	Standard/Gamma Correction
Video Output	HDMI: V1.4 Type-A (Output present on the receiver included in ALYWRK kit)
Wireless Video Transmission Frequency	5.150 Ghz to 5.850 Ghz
Bandwidth	20 MHz/40 MHz

Table 4-4. Wireless Camera Features (continued)

Number of Receivers Connected Simultaneously to Camera	Up to 4
Connection Distance between Camera and Receiver	From 1 to 10 meters
Storage Temperature/Humidity	-20°C to 60°C (-4°F to 140°F)/15 to 90%
Operating Temperature/Humidity	0°C to 40°C (32°F to 104°F)/25 to 75%

Component Identification

5.1 Component Identification

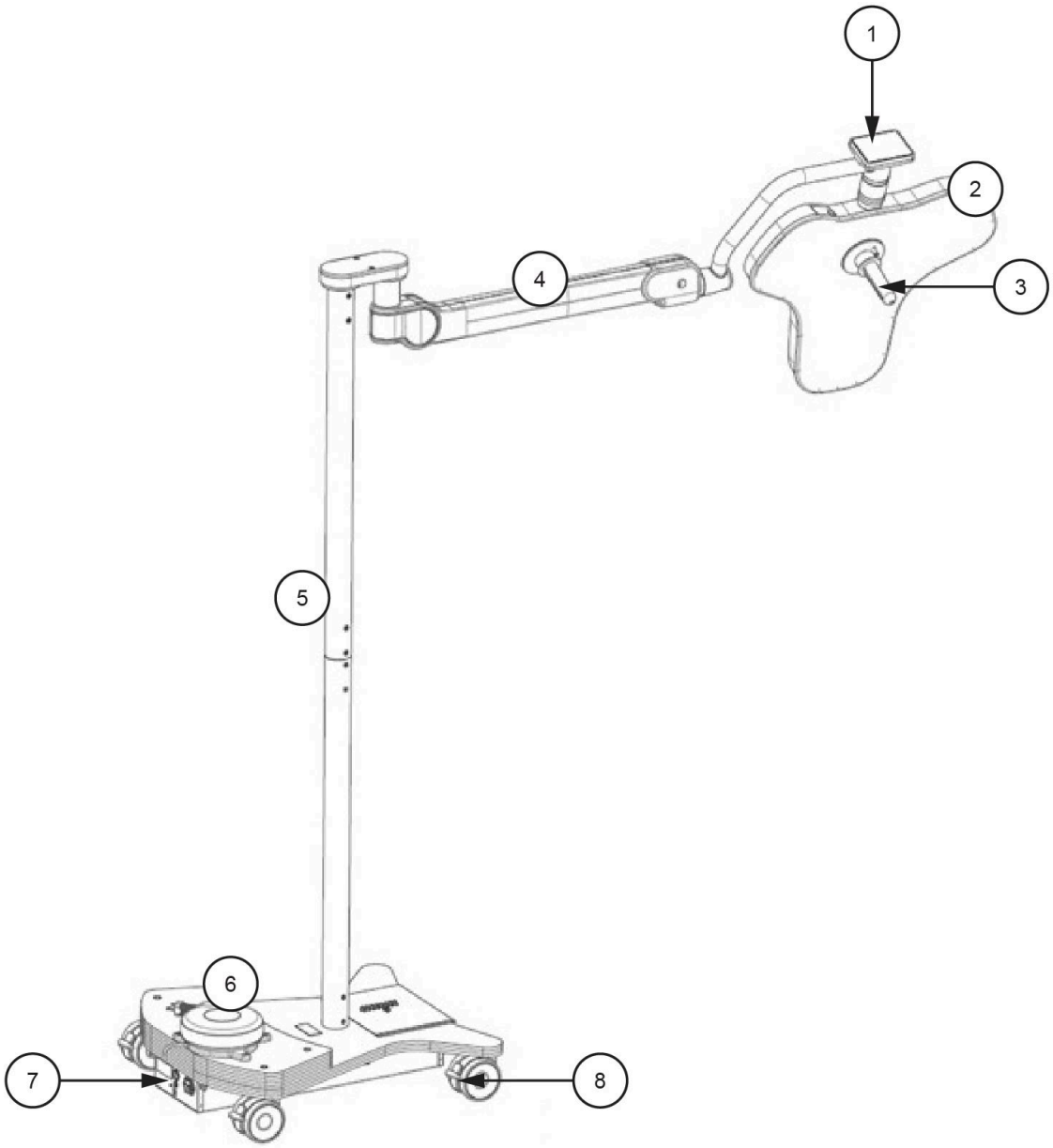

Figure 5-1. Components

1	Touchscreen
2	Lighthead
3	Light Handle
4	Spring Arm
5	Stand
6	Mobile Base
7	Power Switch
8	Wheel Brake

5.2 Operator Controls

The following buttons may appear on the touchscreen.

Lighting Tab		On/Off
		Light Pattern Size Adjustment
		Light Intensity Adjustment and Setting
		Activate/Deactivate Ambient Lighting
		Adjust Color Temperature (if ordered)
Camera Tab		On/Off
		Freeze Image
		Pre-Configuration
		Set Zoom

		Set Image Brightness
		Toggle Auto and Manual Settings
		Set Focus/Auto Focus
		Set Gamma (Pre-Set 1/Pre-Set 2)
		Set White Balance (Automatic/Manual)
		Recall One of the Two Memorized Configurations
		Saving Current Configuration In One Of the Two Memories
Settings Tab		Ambient Lighting Automatic Mode
		Enable/Disable ASC Mode
	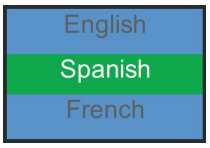	Language
		System Fault
	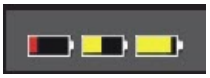	Backup Battery-Powered Operation
		Mains-Powered Operation

Operating Instructions

6.1 Getting Started

Turn on the Light

1. If necessary, connect the power cord to the main power socket on the mobile base.
2. Press the power switch on the mobile base.
3. Use the touchscreen or light handle controls to turn the lighthead on, adjust intensity, etc.

Battery Backup Power

The ALYON mobile stand is designed to operate on mains power, but is also equipped with a battery backup. When mains power is unavailable, the unit will automatically switch to battery backup mode. The battery charge is indicated on the mobile base. When the indicator turns yellow, the battery is below half power and should be reconnected to mains power to recharge. The indicator will be green when the unit is connected to mains power, regardless of the battery charge level.

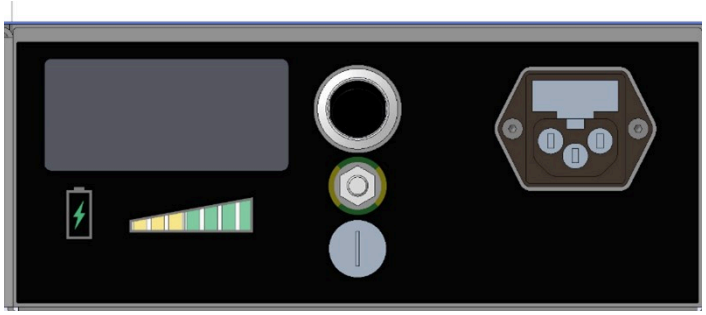

Figure 6-1. Battery Charge Indicator

To extend the lifetime of the batteries, follow these recommendations:

- Use the light on mains whenever possible.
- Recharge batteries systematically after each use (no-use conditions or short-duration storage).
- Recharge batteries when the charge indicator turns yellow.
- Avoid fully depleting the batteries between charging.
- If the mobile stand is not going to be used for at least a month, fully recharge the batteries and remove the battery fuse from the mobile base before storing the light.

6.2 Positioning the Light

CAUTION

POSSIBLE EQUIPMENT DAMAGE

⚠ Do not bump light or lighthead into walls or other equipment.

Moving the Mobile Stand

1. To release the brakes, push the pedal stopper up.

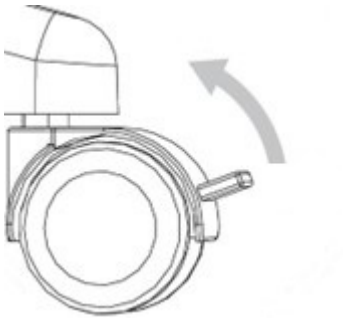

Figure 6-2. Unlock Brakes

2. It's recommended to fold the spring arm down when moving the mobile stand.
3. Roll the mobile stand into place.
4. Lock the brakes by pushing the pedal stopper down.

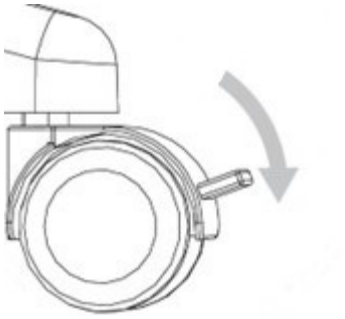

Figure 6-3. Lock Brakes

Positioning the Lighthead

It's recommended to position the lighthead prior to any procedure to minimize the need to adjust the lighthead during a procedure. Move the lighthead using the handle.

The light can be rotated 360° horizontally and -70° to 20° vertically, allowing optimal three-dimensional movement. For optimal illumination of the surgical field, it's recommended to position the light approximately 1 meter from the field.

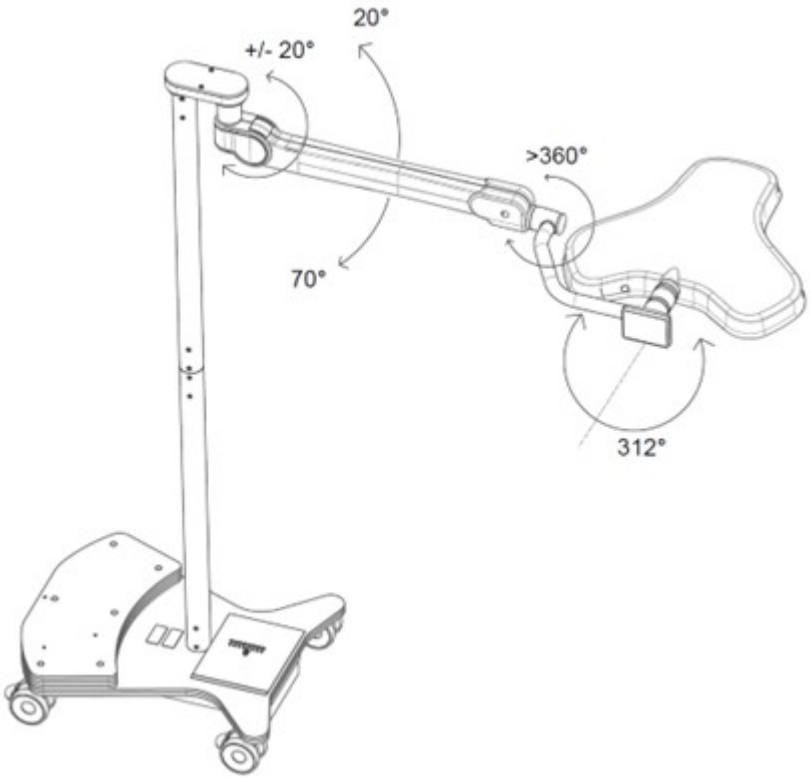

Figure 6-4. Lighthead Mobility

6.3 Using the Light Handle

Introduction

Light handles are used to position the lightheads, allow access to intensity control on each lighthead, and to adjust lighthead pattern size.

If the light handle is not installed, refer to *Installing Light Handle*.

A sterilizable handle may be used in place of a plastic handle and disposable sterile light handle cover. See Installing Sterilizable Light Handle.

The plastic light handle can be removed for cleaning. Do not use the lighthead during a sterile procedure unless a disposable cover is installed on the light handle.

1. Prior to starting a procedure, ensure light handle is in place.
2. Remove sterile light handle cover from its packaging and install onto light handle.

   NOTE: Sterile light handle covers, STERIS catalog #LB53, have been sterilized by the use of ethylene oxide per ANSI/AAMI/ISO 11135:2014.

Installing Light Handle

1. Install light handle by aligning connection bolts with holes on top of light handle.

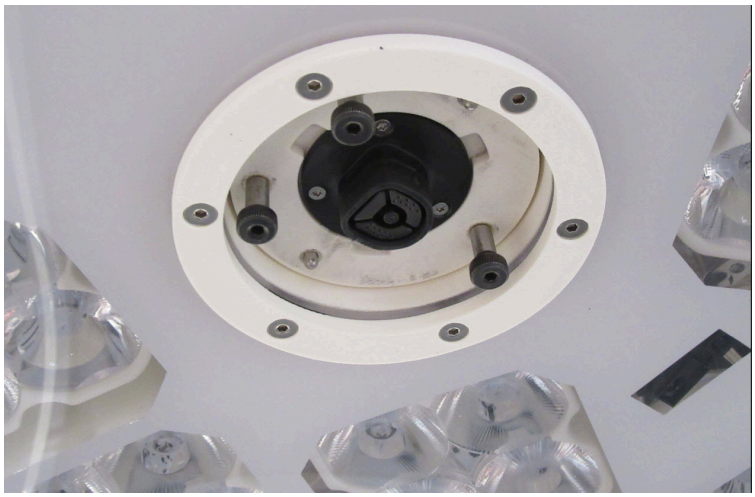

Figure 6-5. Lighthead Connection Bolts

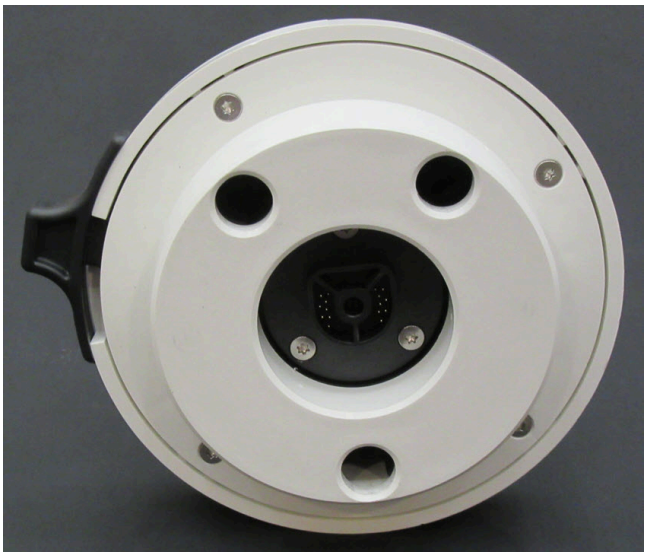

Figure 6-6. Holes on Top of Light Handle



Figure 6-7. Install Light Handle

2. Once light handle is aligned and seated on lighthead accessory port, rotate the switch at the top of light handle in the locked direction.

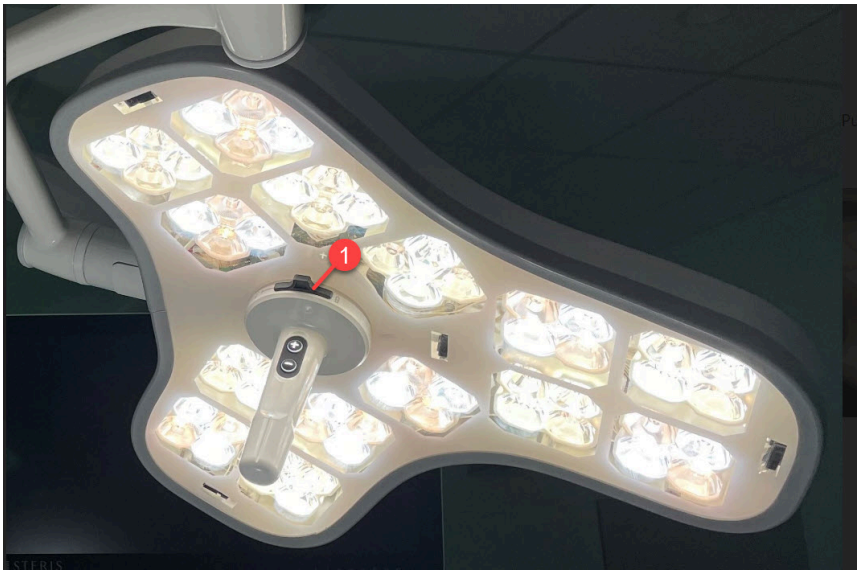

Figure 6-8. Light Handle Locking Switch

Legend
1. Light Handle Lock

NOTE: The light handle only attaches to the lighthead in one orientation.

NOTE: The light handle should be rocked and rotated to ensure it is properly connected.

Uninstalling Light Handle

1. Remove light handle by rotating lock slide at top of light handle.

Installing Sterilizable Light Handle (XHAND5 and ALYHAND Adapter)

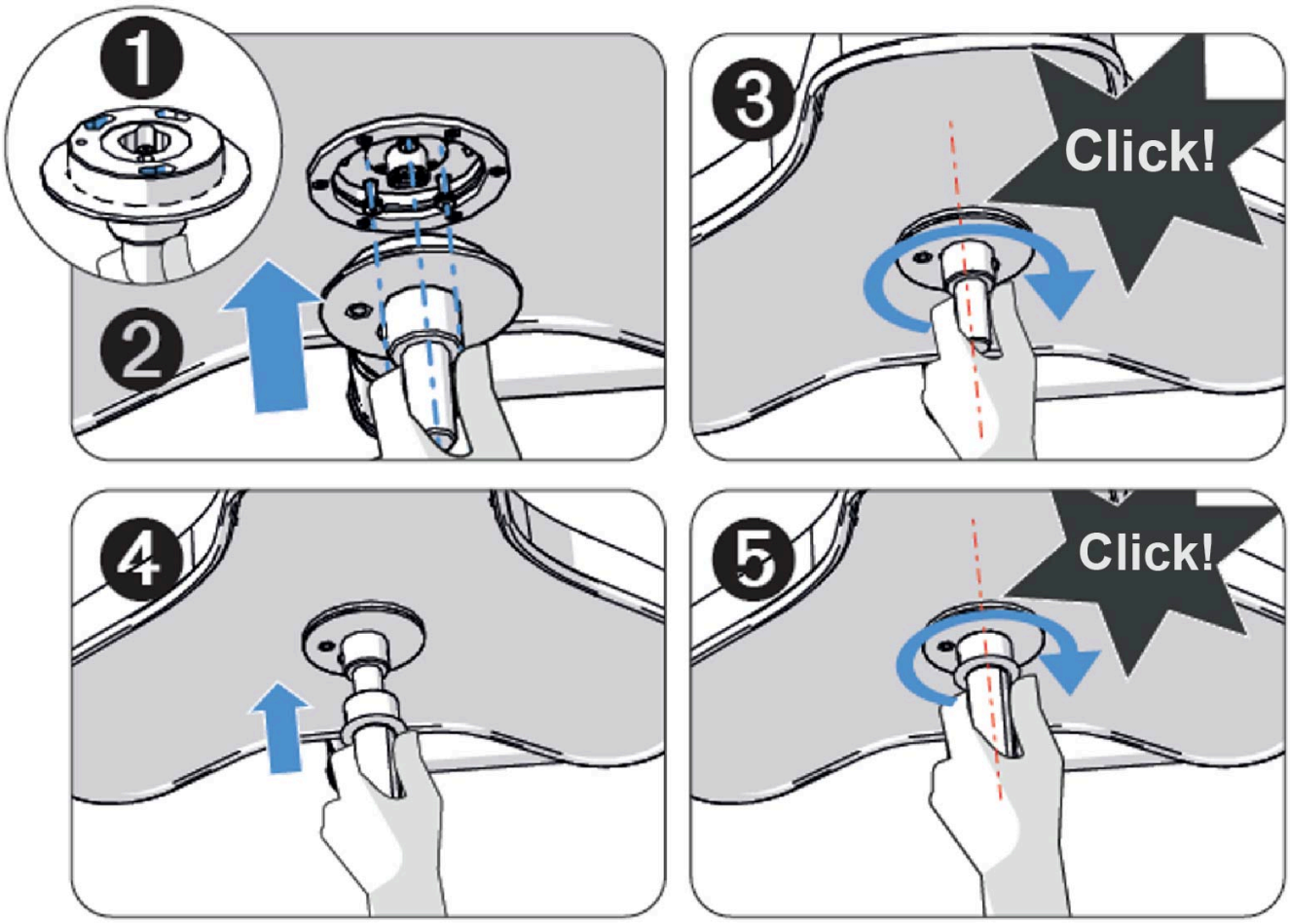

Figure 6-9. Installing the Sterilizable Light Handle

1. Align the 3 connection points of the ALYHAND adapter with those on the light.
2. Push the adapter in and hold.
3. Rotate the adapter clockwise until a click sounds, indicating the adapter is locked in place.
4. Fully attach the XHAND5 sterilizable handle to the support.
5. Turn the handle until a click sounds, indicating the handle is locked in place.

Uninstalling Sterilizable Light Handle (XHAND5 and ALYHAND Adapter)

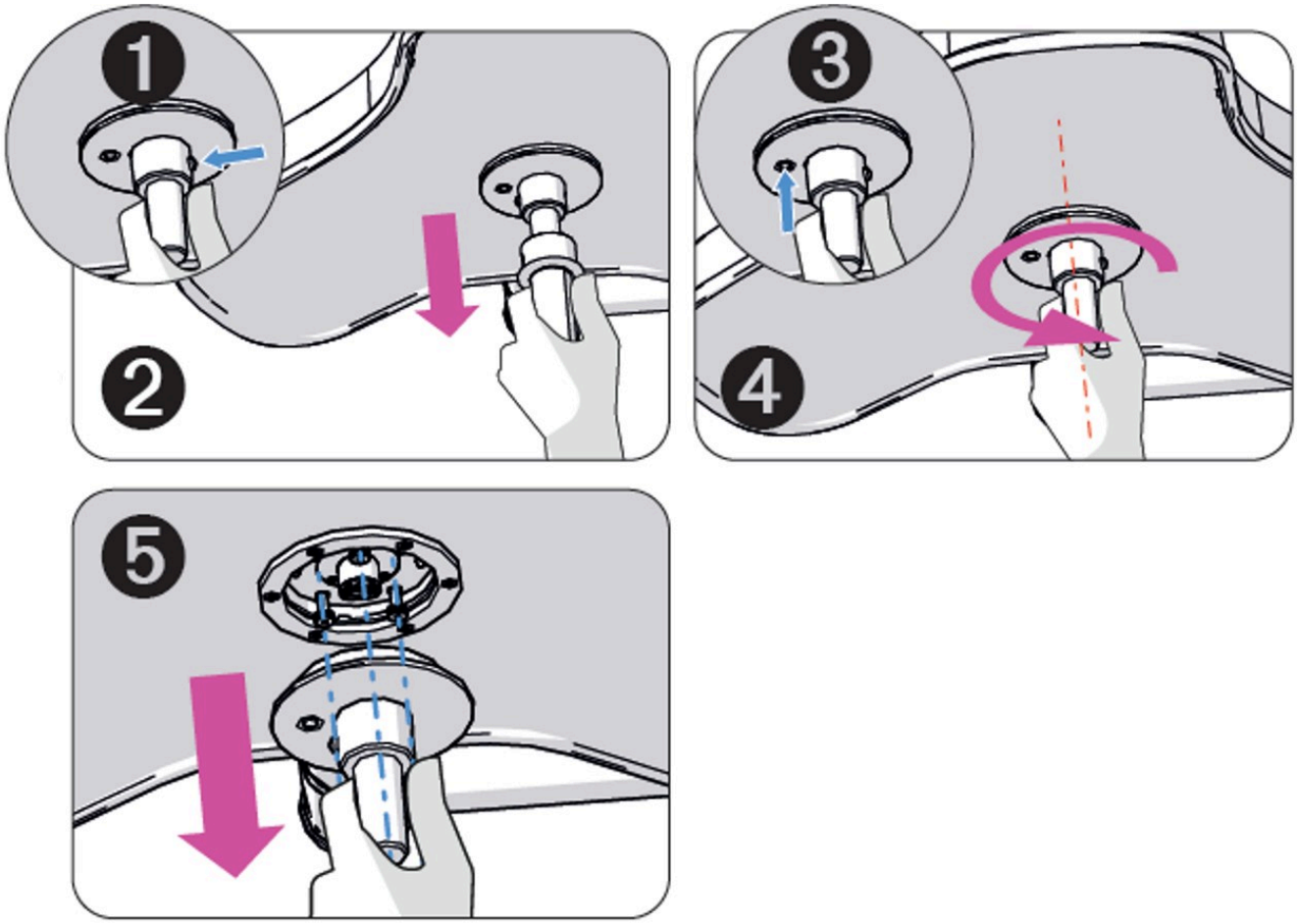

Figure 6-10. Uninstalling the Sterilizable Light Handle

1. Press the button on the XHAND5 sterilizable handle.
2. While holding the button down, pull the handle away to remove it from the adapter.
3. Press the button on the adapter.
4. While holding the button down, rotate the adapter counter-clockwise.
5. Remove the adapter from the lighthead.

Sterilizable Cover Surgeon Control Handle

Prior to starting a procedure, install a clean, sterilized handle cover by pushing it onto the handle until positive engagement is felt. Ensure handle cover is fully engaged prior to use.



Figure 6-11. Sterilizable Cover Surgeon Control Handle

Cleaning Recommendations

1. Remove visible debris by means of manual or automated cleaning using an enzymatic or neutral PH cleaner/detergent and water. Any cleaner used must be compatible with aluminum and silicone.
   - Remove silicone cover from Surgeon Control Handle before cleaning.
   - Follow instructions supplied with the cleaning agent regarding temperature and dilution rates.
   - Use a brush or cloth if needed.
2. Rinse thoroughly.

Sterilization Recommendation

1. Silicone sterilizable cover be sterilized before use in any surgical procedure.
2. When placing cover in the sterilizer for processing, the best practice is to orient all objects with openings downward, as if to allow water (or air) to flow out.
3. Sterilize handle cover using a cycle with either of the following parameters:
   - Prevacuum
     - **Temperature:** 270°F (132°C)
     - **Exposure Time:** 4 minutes
   - Gravity
     - **Temperature:** 270°F (132°C)
     - **Exposure Time:** 10 minutes

     NOTE:

     Before using silicone cover, note the following:

     1. Reuse limit is 500 cycles.
     2. Replace ring if yellowing, deformation, cracking or other signs of deterioration are present.

Installing Disposable Light Handle Cover

NOTE:

Wrinkles in the cover are normal. The appearance of wrinkles in the cover does not compromise the integrity of the cover.

1. Place sterile cover on light handle.



Figure 6-12. Place Sterile Cover On Light Handle

2. Push sterile cover completely onto light handle.



Figure 6-13. Installed Disposable Sterile Light Handle Cover

Using the Light Handle Controls

Rotate the handle counterclockwise to increase the light pattern size, or rotate clockwise to decrease the light pattern size. If enabled in the settings, hold the rotation for 3 seconds to switch the light on (clockwise) or off (counterclockwise).

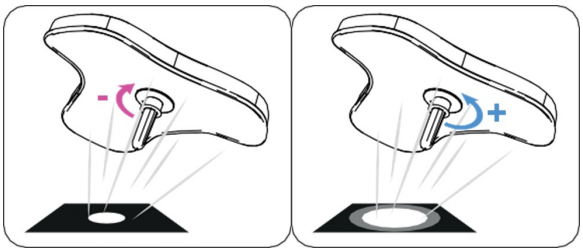

Figure 6-14. Adjust Light Pattern Size

Some handles have buttons that adjust light intensity:

- Short press the + button to increase light intensity one level.
- Short press the — button to decrease light intensity one level.
- Long press the + button to turn the light on.
- Long press the — button to turn the light off.

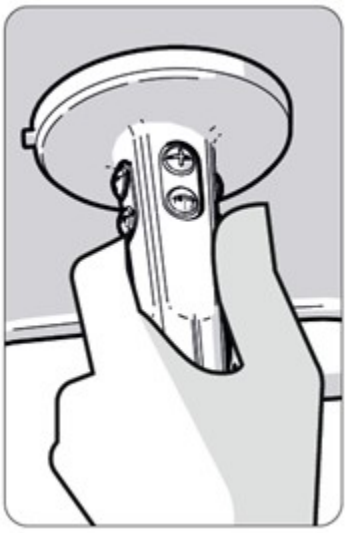

Figure 6-15. Light Handle

When ambient lighting is active, press the + or — button to return to default lighting.

6.4 Using the Touchscreen

Lightheads are equipped with touchscreens mounted on the yoke. The non-sterile user is able to adjust lighthead intensity, pattern size, color temperature, ambient light color, and turn lightheads on and off, as well as control camera settings (if equipped). Controls are listed below.

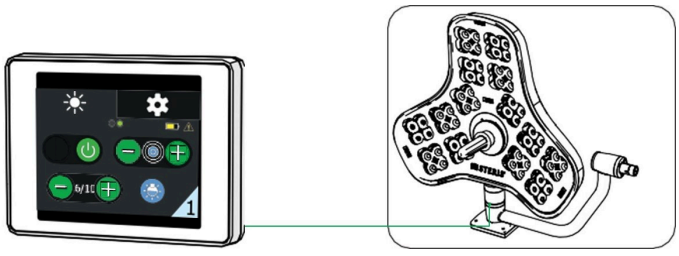

Figure 6-16. Yoke Touchscreen

Lighting Controls

The lighting tab displays the functions for the lighthead on which the touchscreen is fitted. Swipe left on the screen to display more functions.

- To turn the lighthead on, slide the On/Off button to the right. The On/Off button lights up on the display. By default, the light will be set to intensity level 6, small light pattern, and 4500K.



Figure 6-17. On/Off Button (On Position Displayed)

- To adjust lighthead intensity, use the plus and minus buttons to increase or decrease the brightness of the light from intensity 0 (non-surgical task lighting, indicated by a central blue ring on the display) to intensity 10 (brightest).



Figure 6-18. Increase or Decrease Light Intensity

- To adjust the size of the light pattern, use the plus and minus buttons to increase or decrease the diameter of the light output.



Figure 6-19. Increase or Decrease Light Pattern Diameter

- To switch to ambient lighting mode, press the ambient light button. Press again to return to the previous intensity level.



Figure 6-20. Ambient Light Mode

- If the light is operating on battery power, a battery icon will be displayed that indicates the charge status of the battery unit.



Figure 6-21. Battery Power Indicator

- If any issues occur, the fault icon will appear. Press on the icon for more details about the fault.



Figure 6-22. Fault Indicator

Camera Controls

When a camera is fitted on the lighthead, all camera control functions are displayed.



Figure 6-23. Camera Options

- Camera power: Toggle to turn the camera on and off.
- Zoom: Use this function for determining the level of detail visible in the image field. The zoom function adjusts the image field continuously between two extremes:

  NOTE: Overall distance between the object and the camera, plus the length of zoom, affects the camera's ability to achieve a sharp focus. The greater the zoom length, the less capability the camera has to establish a sharp focus.

  – Telephoto: At extreme telephoto, the camera captures an image showing great detail in a small area.

    NOTE: At extreme telephoto, any motion of the lighthead/camera may be exaggerated (jerky). The field of focus has little depth at this extreme, forcing the Auto Focus function (if enabled) to refocus the camera when any object (such as a hand) enters the image field, or if camera position is adjusted. The camera is also sensitive to light level changes at extreme telephoto.

  – Wide Angle: At extreme wide angle, the camera captures a large image with less detail than telephoto.

    NOTE: At extreme wide angle, the image field possesses a greater depth of focus and less sensitivity to light level changes.
- Freeze: Press to freeze the camera image.
- All Auto: Press to set brightness, focus, and white balance to the default levels.



Figure 6-24. Swipe for More Camera Options

- Brightness: Use this function to affect the overall brightness (or darkness) of the video image. The Bright control can be set to adjust itself automatically. When the brightness Auto mode is selected, the Auto text is white and the brightness adjustment controls are inactive. When Manual mode is selected, the Manual text is white and the brightness adjustment controls are active.
- Auto Brightness: When auto brightness is on, auto button turns green to show that it is in an automatic state and the two sun buttons turn grey to indicate they are inactive.

- Focus: Use this function to manually set the focus. The Auto Focus function must be toggled off to enable manual focusing. Adjust the clarity of focus by pressing the brightness increase button or brightness decrease button.
- Auto Focus: Use this function to toggle Auto Focus on or off. When Auto Focus is ON, the camera automatically focuses on the object in the image field closest to the camera lens. The focus adjustment arrows are inactive. When Auto Focus is turned OFF and Manual Focus is on, the Manual Focus text is white. The focus adjustment arrows are active. The camera maintains focus on the last object upon which it was focused, until Auto Focus is turned back on.



Figure 6-25. Swipe for More Camera Options

- Gamma: Press the left button to decrease gamma; press the right button to increase gamma.
- White Balance: Press the left button to readjust fixed white balance mode.

  NOTE: This is a fixed white balance mode that may be automatically readjusted by pressing this button, assuming that a white subject, in correct lighting conditions, and occupying more than 1/2 of the image, is submitted to the camera. This data is lost when the power is turned off and must be reset.

  Press the auto button to reset white balance to the default.
- Load: Press to load previously saved camera settings.
- Save: Press to save the current camera settings.

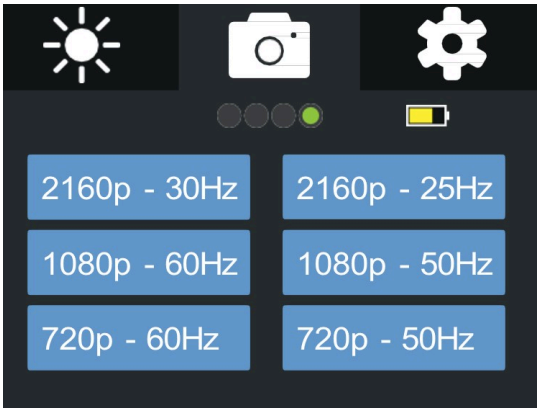

Figure 6-26. Video Format

- Select the desired camera video format from the available options.

Settings

The settings tab provides quick access to several settings options. Swipe left or right to see all available settings.

- To activate or deactivate automatic ambient lighting, toggle the AUTO button. When activated, turning off the lighthead will switch all lights to ambient light mode. There are several color options to select.



Figure 6-27. Ambient Light Settings

- To activate or deactivate Adaptive Shadow Control, toggle the on/off button.



Figure 6-28. Toggle Adaptive Shadow Control (On Position Displayed)

- To change the system language, select the desired language from the list.

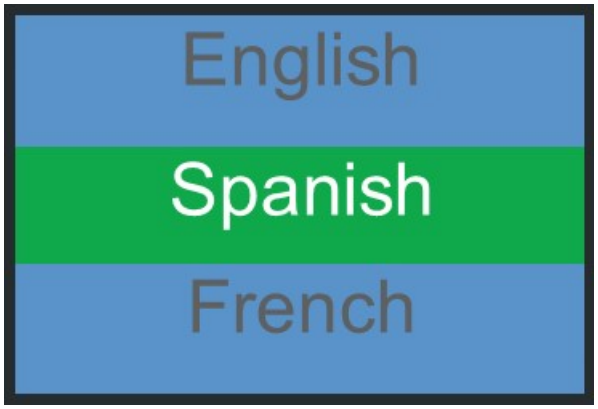

Figure 6-29. Language Options

- To view the Information screen, select the Info button. This will show information about how the system is configured, and may be requested by a technician for remote troubleshooting.



Figure 6-30. Information

- To view any faults, press the Defaults button. This will show a list of active faults.

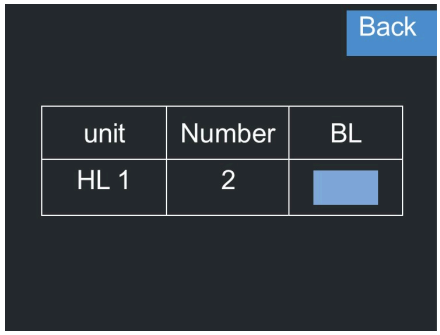

Figure 6-31. Faults

6.5 Using the Video Camera

Installing 4K Wireless Video Camera

CAUTION

POSSIBLE EQUIPMENT DAMAGE

⚠ When installing or removing the video camera be careful to place it in a secure location to prevent it from rolling, dropping and breaking. Also, to avoid scratching the lens surface, do not stand camera up with lens side facing down.

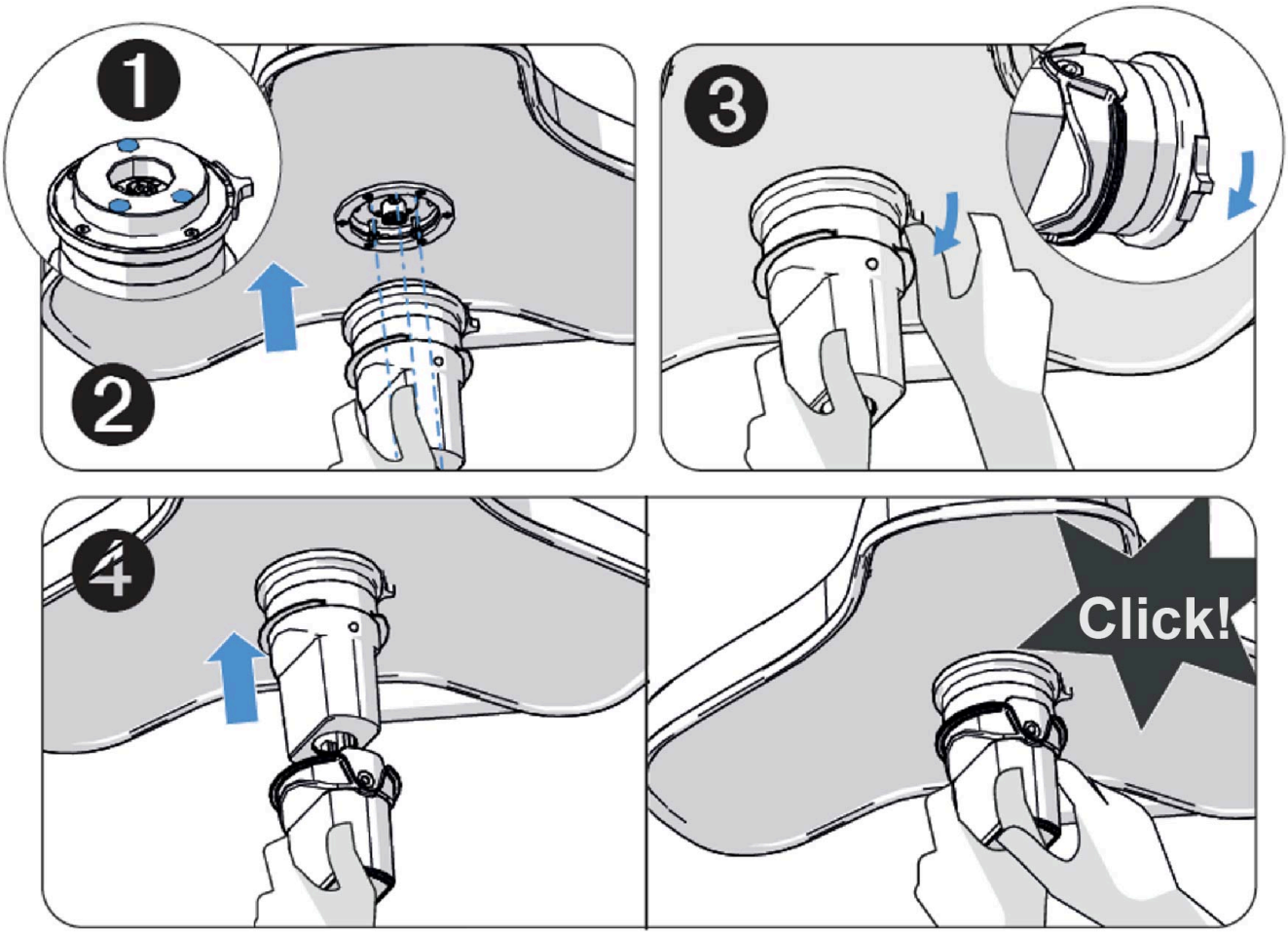

Figure 6-32. Installing the 4K Wireless Video Camera

1. Align the 3 connection points of the camera handle with those on the lighthead.
2. Push the camera handle in and hold.
3. Rotate the catch clockwise until a click is heard, indicating it's locked in place.
4. Fully attach the ALYWSH sterilizable case onto the camera handle until a click is heard, indicating it's locked in place.

Pairing 4K Wireless Video Camera

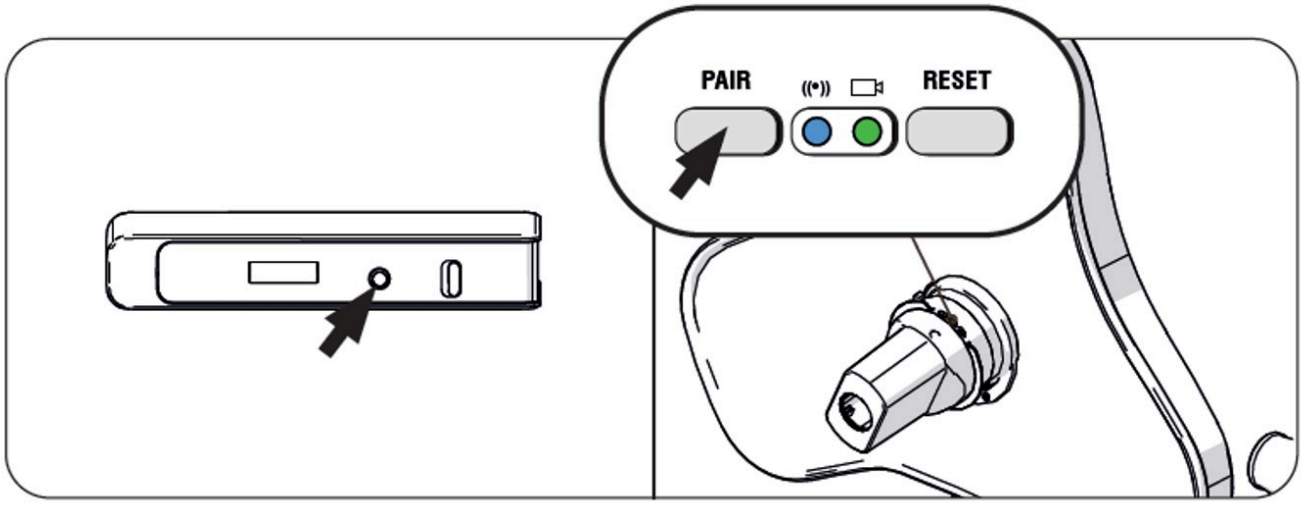

Figure 6-33. Pairing the 4K Wireless Video Camera

1. In any order, press the pairing button on both the camera and the receiver.
2. The LED will rapidly flash to indicate that pairing is in progress. The camera is successfully paired when the blue LED remains on. The LED will turn solid green when the image is sent to the receiver.

Uninstalling 4K Wireless Video Camera

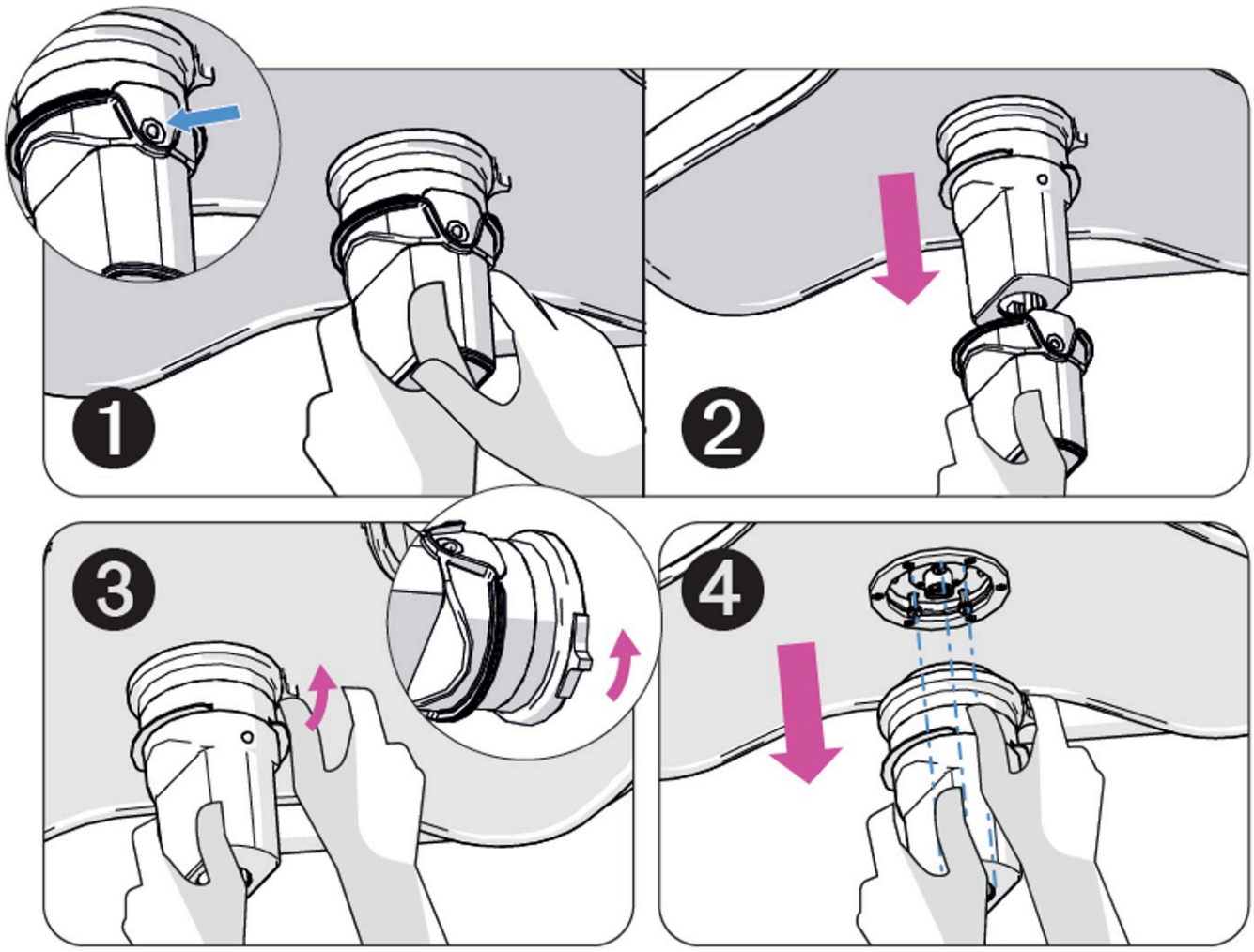

Figure 6-34. Uninstalling the 4K Wireless Video Camera

1. Press the button that locks the sterilizable handle in position.
2. While holding the button, pull the handle away to remove it from the camera handle.
3. Rotate the camera handle catch counter-clockwise to remove it from the mount.
4. Remove the camera handle.

Routine Maintenance and Inspection

7.1 Scheduled Maintenance

WARNING

PERSONAL INJURY

⚠ Light system may be contaminated with dangerous pathogens; wear PPE.

CAUTION

POSSIBLE EQUIPMENT DAMAGE

⚠ Always follow manufacturer instructions for concentrations and use of cleaning products.

Daily Maintenance

Complete the following steps at the end of each day to help ensure the optimal performance of the light system. Before any cleaning, check that the light has been switched off and has cooled down.

1. Disinfect the sterilizable handle:
    a. Remove the handle.
    b. Rinse the handle under hot running water (68°F to 77°F/20°C to 25°C) for at least one minute, using a soft-bristled nylon brush to remove external dirt.
    c. Clean the handle using an automatic instrument washer-disinfector using an enzymatic detergent with neutral pH according to the following instructions:

Step	Description	Minimum Temperature	Minimum Cycle Time (in minutes)
1	Prewash	Cold water	2
2	Wash (detergent concentration according to manufacturer's directions)	140°F/60°C	4.5
3	Rinse	Hot water	1
4	Thermal disinfection	194°F/90°C	1
5	Drying	212°F/100°C	6

d. Sterilize the handle using steam sterilization according to the following instructions:

Sterilization Cycle	Sterilizable Handle (LAS0027) Sterilizable Silicon Cover (LAS0036) 4K Sterilizable Camera Handle (ALYWSH5)	Sterilizable Handle (XHAND5)
Pre-vacuum	4 minutes at 270°F/132°C Drying Time: 30 minutes	4 minutes at 270°F/132°C Drying Time: 30 minutes
Gravity Cycle (only for LAS0027)	10 minutes at 270°F/132°C Drying Time: 30 minutes	4 minutes at 250°F/121°C Drying Time: 30 minutes
Prion Protocol	—	18 minutes at 273°F/134°C

e. Because of the sterilization cycles, each sterilizable handle has a limited life expectancy. After each sterilization cycle, inspect each handle for cracks and deformation and confirm that the latch works. Replace any handle that shows cracks or deformation.

2. Clean the lighting system:
   a. Use a disinfectant intended for plastic materials to clean the light.

      NOTE: Never spray anything directly onto the light head; dampen a soft cloth using solution and then clean the light.

   b. Rinse the lighting system with a damp cloth.
   c. Evenly apply a disinfectant and let dry.
   d. Use a damp cloth to remove any excess product.
3. Clean the touchscreen:
   a. Turn off the touchscreen.
   b. Use a lint-free cloth with detergent to disinfect the touchscreen.
   c. Allow the touchscreen to dry before turning it on.

7.2 Preventative Maintenance

Daily Maintenance

1. Check that the light switches on.
2. Check that the light can be controlled from the light handle and the touchscreen.
3. Check the stability of the lighthead and spring arm.
4. Check that the center handle is securely attached.
5. Check the overall light condition (seal and cover are in place, no chipped paint, etc.)
6. Check the condition of the underside of the lighthead.
7. (If applicable) Check that the camera is working properly.

Annual Maintenance

CAUTION

POSSIBLE EQUIPMENT DAMAGE

⚠ Annual maintenance and inspection should be performed only by a STERIS technician or a STERIS-trained technician.

1. Check all circlips for wear.
2. Check that all covers and seals are in place and in good condition.
3. Check that the mounting screws are tightened.
4. Check that the brakes are tightened on the spring arm.
5. Check nominal lighting.
6. Check that the sterilizable handle locks properly.
7. Check that the batteries work properly. It is recommended to change the batteries every 3 years (any battery change must be performed only by a STERIS technician or STERIS-approved technician).
8. Check light controls to ensure all buttons and the touchscreen work.

Troubleshooting

8.1 Introduction

WARNING

PERSONAL INJURY HAZARD

⚠

- Do not attempt to clean lighthead unless power is turned off and lighthead has cooled sufficiently.
- Do not attempt to adjust suspension system. Refer servicing to qualified service personnel.

WARNING

IMPACT HAZARD

⚠ Do not remove the tension screw from the spring arm joint until the lighthead has been securely installed onto the spring arm. Note: This warning applies at both installation and de-installation procedures.

Use the following Troubleshooting Chart to identify problems with the mobile stand. The chart also offers probable causes and corrections to problems that may occur.

If you are unable to correct the problem with this Troubleshooting Chart, or if a problem occurs that is not described on the chart, please call STERIS. A representative will arrange to have your equipment promptly put into working order by a STERIS-trained service representative. **Never permit unqualified persons to service the lighthead, suspension arm or electronic system components.**

8.2 LED Module Does Not Turn On

Condition

General Troubleshooting	Additional Information
LED module or internal harness requires replacement.	1. Call STERIS.
Fuse(s) may be blown if all LEDs do not turn on.	1. Call STERIS.

8.3 Light Does Not Turn On

Condition

General Troubleshooting	Additional Information
Power supply voltage may be set too low or too high.	1. Call STERIS.
Fuse(s) may be blown.	1. Call STERIS.
Commutator/wiring problem.	1. Call STERIS.
Batteries discharged.	1. Plug in to AC mains. 2. Call STERIS.

8.4 Light Flickers When Moved

Condition

General Troubleshooting	Additional Information
Possible contact problem at yoke commutator.	1. Contact STERIS Service.

8.5 Light Pattern Does Not Change

Condition

General Troubleshooting	Additional Information
Hardware or electrical issue.	1. Refer problem to qualified STERIS or STERIS-trained service technician.

8.6 Lighthead Drifts Once Set in Position and Released

Condition

General Troubleshooting	Additional Information
Brake adjustment incorrect.	1. Call STERIS.

8.7 Poor Light Pattern

Condition

General Troubleshooting	Additional Information
Dirty distance sensors or lens cover.	1. Refer problem to qualified STERIS or STERIS-trained service technician.
LED lens misalignment.	1. Contact STERIS Service.

Appendix

9.1 EMC Compliance

The ALYON Mobile Stand requires special precautions regarding EMC and needs to be installed and put into service according to the EMC information provided in these accompanying documents.

WARNING

PERSONAL INJURY AND/OR POSSIBLE EQUIPMENT DAMAGE HAZARD

⚠ Portable RF communications equipment (including peripherals such as antenna cables and external antennas) should be used no closer than 30 cm (12”) to any part of the HarmonyAIR ALYON Surgical Lighting System Mobile Stand, including cables specified by the manufacturer. Otherwise, degradation of the performance of this equipment could result.

⚠ A risk of increased emissions or decreased immunity may result if any additional cables are attached.

⚠ This device has not been tested for compatibility with all other potential RF Emitters such as X-ray, Metal Detectors, Electrosurgical Equipment, Diathermy Equipment, 5G Cellular, NFC, WPT, or Electronic Article Surveillance (EAS) devices. Caution should be used if such emitters are present within the use environment.

⚠ Use of this equipment adjacent to or stacked with other equipment should be avoided because it could result in improper operation. If such use is necessary, this equipment and the other equipment should be observed to verify that they are operating normally.

⚠ Use of accessories, transducers, and cables other than those specified or provided by the manufacturer of this equipment could result in increased electromagnetic emissions or decreased electromagnetic immunity of this equipment and result in improper operation.

Table 9-1. Guidance and Manufacturer's Declaration — Electromagnetic Emissions

<table>
<tr><th colspan="3">The ALYON mobile stand is intended for use in the electromagnetic environment specified below. The Customer or the user of the ALYON mobile stand should assure that it is used in such an environment.</th></tr>
<tr><td>Emissions Test</td><td>Compliance</td><td>Electromagnetic environment – Guidance</td></tr>
<tr><td>RF emissions CISPR 11</td><td>Group 1</td><td>The ALYON mobile stand uses RF energy only for its internal function. Therefore, its RF emissions are very low and are not likely to cause any interference in nearby electronic equipment.</td></tr>
<tr><td>RF emissions CISPR 11</td><td>Class A</td><td rowspan="3">The ALYON mobile stand is suitable for use in all establishments other than domestic, and may be used in domestic establishments and those directly connected to the public low-voltage power supply network that supplies buildings used for domestic purposes, provided the following warnings are heeded:

WARNING

PERSONAL INJURY AND/OR EQUIPMENT DAMAGE HAZARD

⚠ This equipment/system is intended for use by healthcare professionals only. This equipment/system may cause radio interference or may disrupt the operation of nearby equipment. It may be necessary to take mitigation measures, such as re-orienting or relocating the HarmonyAIR ALYON Surgical Lighting System Mobile Stand or shielding the location.

⚠ The emission characteristics of this equipment make it suitable for use in industrial areas and hospitals (CISPR 11 Class A). If it is used in a residential environment (for which CISPR 11 Class B is normally required), this equipment might not offer adequate protection to radio-frequency communication services. The user might need to take mitigation measures, such as relocating or reorienting the equipment.</td></tr>
<tr><td>Harmonic emissions IEC 61000-3-2</td><td>Complies</td></tr>
<tr><td>Voltage fluctuations/flicker emissions IEC 61000-3-3</td><td>Complies</td></tr>
</table>

Table 9-2. Guidance and Manufacturer's Declaration — Electromagnetic Immunity

The ALYON mobile stand is intended for use in the electromagnetic environment specified below. The Customer or the user of the ALYON mobile stand should assure that it is used in such an environment.			
Immunity Test	IEC 60601 Test Level	Compliance Level	Electromagnetic Environment Guidance
Electrostatic discharge (ESD) IEC 61000-4-2	±8 kV contact ±15 kV air	±8 kV contact ±15 kV air	Professional healthcare facility environment. Floors should be wood, concrete, or ceramic tile. If floors are covered with synthetic material, the relative humidity should be at least 30%.
Electrical fast transient/burst IEC 61000-4-4	±2 kV on mains ±1 kV on inlet/outlet	±2 kV on mains ±1 kV on inlet/outlet	Professional healthcare facility environment. Mains power quality should be that of a typical commercial or hospital environment.
Surge IEC 61000-4-5	±1 kV line(s) to line(s) ±2 kV line(s) to earth	±1 kV line(s) to line (s) ±2 kV line(s) to earth	Professional healthcare facility environment. Mains power quality should be that of a typical commercial or hospital environment.
Voltage dips, short interruptions, and voltage variations on power supply in-put lines IEC 61000-4-11	<5% U_T (>95% dip in U_T) for 0.5 cycle 40% U_T (60% dip in U_T) for 5 cycles 70% U_T (30% dip in U_T) for 25 cycles0% U_T (30% dip in U_T) for 25 cycles <5% U_T (>95% dip in U_T) for 5 seconds	<5% U_T (>95% dip in U_T) for 0.5 cycle 40% U_T (60% dip in U_T) for 5 cycles 70% U_T (30% dip in U_T) for 25 cycles0% U_T (30% dip in U_T) for 25 cycles <5% U_T (>95% dip in U_T) for 5 seconds	Professional healthcare facility environment. Mains power quality should be that of a typical commercial or hospital environment. If the user of the ALYON mobile stand requires continued operation during power mains interruptions, it is recommended that the ALYON mobile stand be powered from an uninterruptible power supply or a battery.
Power frequency (50/60 Hz) magnetic field IEC 61000-4-8	30 A/m	30 A/m	Professional healthcare facility environment. Power frequency magnetic fields should be at levels characteristic of a typical location in a typical commercial or hospital environment.
RF conducted IEC 61000-4-6	3V 150 kHz to 80 MHz 6V in ISM bands between 0.15 MHz and 80 Mkz 0.8 MA at 1 kHz	3V 150 kHz to 80 MHz 6V in ISM bands between 0.15 MHz and 80 Mkz 0.8 MA at 1 kHz	Professional healthcare facility environment.

Table 9-2. Guidance and Manufacturer's Declaration — Electromagnetic Immunity (continued)

The ALYON mobile stand is intended for use in the electromagnetic environment specified below. The Customer or the user of the ALYON mobile stand should assure that it is used in such an environment.			
RF radiated IEC 61000-4-3	3V/m 80 Mkz to 2.7 GHz 0.8 MA at 1 kHz 9V/m 710 MHz, 745 MHz 780 MHz, 5240 MHz 5550 MHz, 5785 MHz 27V/m 385 MHz 28V/m 450 MHz, 810 MHz 870 MHz, 930 MHz 1720 MHz, 1845 MHz 1970 MHz, 2450 MHz	3V/m 80 Mkz to 2.7 GHz 0.8 MA at 1 kHz 9V/m 710 MHz, 745 MHz 780 MHz, 5240 MHz 5550 MHz, 5785 MHz 27V/m 385 MHz 28V/m 450 MHz, 810 MHz 870 MHz, 930 MHz 1720 MHz, 1845 MHz 1970 MHz, 2450 MHz	Professional healthcare facility environment.
NOTE: U_T is the AC mains voltage prior to application of the test level.			